This is a digital document from the collections of the *Wyoming Water Resources Data System* (WRDS) Library.

For additional information about this document and the document conversion process, please contact WRDS at wrds@uwyo.edu and include the phrase **"Digital Documents"** in your subject heading.

To view other documents please visit the WRDS Library online at:
http://library.wrds.uwyo.edu

Mailing Address:
Water Resources Data System
University of Wyoming, Dept 3943
1000 E University Avenue
Laramie, WY 82071

Physical Address:
Wyoming Hall, Room 249
University of Wyoming
Laramie, WY 82071

Phone: (307) 766-6651
Fax: (307) 766-3785

Funding for WRDS and the creation of this electronic document was provided by the Wyoming Water Development Commission (http://wwdc.state.wy.us)

This PDF is intended to represent the document delivered to the Wyoming Water Development Office in hard copy; however variations may exist from the printed version.

April 2018

New Fork River Watershed

Level I Study

Prepared for
Wyoming Water Development Commission

Prepared by
Tetra Tech, Inc., P.O. Box 11895, Jackson, Wyoming 83002

In association with
RJH Consultants, Inc.
Rio Verde Engineering

Contents

1 Introduction 1
1.1 Background 1
1.2 Purpose 1
1.3 Document Content 2
2 Watershed Description 3
2.1 Land Use and Management 3
2.1.1 Land Ownership 3
2.1.2 Land Use and Land Cover 7
2.1.3 Special Designated Areas 9
2.1.4 Oil and Gas Production 11
2.1.5 Mining and Mineral Resources 11
2.1.6 Transportation and Energy Infrastructure 14
2.1.7 Agriculture 14
2.2 Cultural Resources 21
2.3 Climate 21
2.4 Geology and Soils 30
2.5 Groundwater Hydrology 30
2.6 Surface Water Hydrology 30
2.6.1 General Description 30
2.6.2 Gaged Peak Flow Analysis 34
2.6.3 Gaged Flow Duration Analysis 35
2.6.4 Estimated Monthly, Annual, and Peak Discharge 37
2.7 Fluvial Geomorphology 41
2.8 Water Quality 44
2.8.1 Stream Classifications 44
2.8.2 Waters Requiring TMDLs 45
2.8.3 Suitability for Agricultural and Wildlife Use 45
2.8.4 Permitted Discharges 48
2.9 Vegetation and Ecological Communities 48
2.9.1 Ecological Site Descriptions 52
2.10 Wetlands 55
2.10.1 Existing Wetland Profile 55
2.10.2 Accuracy of Available Wetland Maps 62
2.10.3 Wetland Functions 62
2.10.4 Threats to Wetlands 63
2.11 Wildlife and Fisheries 63

2.11.1 Big Game ... 63
2.11.2 Greater Sage-Grouse ... 70
2.11.3 Threatened, Endangered, and Sensitive Species ... 72
2.11.4 Unique Wildlife Habitats ... 76
2.11.5 Fisheries ... 80
3 Watershed Inventory ... 82
3.1 Irrigation ... 82
3.1.1 Water Use and Availability ... 90
3.2 Municipal Systems ... 92
3.3 Wildlife/Livestock Watering Opportunities Inventory ... 92
3.4 Groundwater Development Inventory ... 97
3.5 Water Storage Site Inventory ... 98
4 Watershed Management and Rehabilitation Plan ... 100
4.1 Small Water Projects ... 100
4.1.1 Small Water Project Evaluation/Prioritization ... 102
4.1.2 Irrigation ... 109
4.1.3 Wildlife/Livestock Water Source ... 114
4.1.4 Small Water Storage ... 118
4.1.5 Stream Restoration ... 120
4.2 Large Surface Water Storage Projects ... 121
4.2.1 Large Reservoir Prioritization and Descriptions ... 126
5 Cost Estimates ... 131
5.1 Small Water Projects ... 131
5.2 Large Water Storage ... 131
5.2.1 Estimated Costs ... 131
5.2.2 Ability to Pay ... 134
5.2.3 Operation and Maintenance Costs ... 135
6 Permits, Notification, and Approvals ... 136
6.1 Small Water Project Permitting ... 136
6.2 Large Water Storage Project Permitting ... 141
7 Funding Opportunities ... 141
8 Stakeholder Involvement ... 147
9 Conclusions and Recommendations ... 147
10 References ... 149

Appendices

Appendix A – Digital Library
Appendix B – GIS Geodatabase
Appendix C – Special Designated Areas
Appendix D – Inventoried Archaeological Sites within the New Fork Study Area
Appendix E – Geology, Aquifers, and Soils Summary
Appendix F – Peak Flow Analysis
Appendix G – Flow Duration Analysis
Appendix H – Stream Classification
Appendix I – Water Quality
Appendix J – Ecological Site Descriptions
Appendix K – Wyoming Natural Diversity Database Occurrence Records
Appendix L – Mapping and Describing Water Conveyance in the New Fork River Watershed
Appendix M – Small Water Project Prioritization
Appendix N – Conceptual Designs and Cost Estimates – Small Water Projects
Appendix O – Reservoir Screening Evaluation
Appendix P – Reservoir Conceptual Design Discussion
Appendix Q – Commonly Required Types of Permits, Notifications, and Approvals
Appendix R – Stakeholder Involvement
Appendix S – Silver Lake Reconnaissance

Tables

Table 1. Special Designated Areas within the New Fork River watershed 9
Table 2. BLM grazing allotments 17
Table 3. USFS grazing allotments 20
Table 4. Summary of temperature and precipitation data at NWS stations within the New Fork River watershed 25
Table 5. Precipitation data collected at SNOTEL sites within the New Fork River watershed 26
Table 6. Summary of USGS stream gage data within the New Fork River Basin study area 32
Table 7. Peak flow analysis for the New Fork River watershed 34
Table 8. Mean daily flow and percent exceedance flows for New Fork River watershed 36
Table 9. Summary of Rosgen stream type coverage and general characteristics 44
Table 10. NRCS Ecological Sites in the New Fork River watershed 53
Table 11. Total and percent acres by wetland type and NWI classification in the New Fork River watershed 55
Table 12. Total and percent acres of each wetland type by NWI classification of water regime in the New Fork River watershed 57
Table 13. Total and percent acres of wetlands classified with NWI modifiers of wetland alterations in the New Fork River watershed 58
Table 14. Total and percent acres of wetland type intersecting irrigated lands in the New Fork River watershed 59
Table 15. Primary threats to the Green River Wetland Complex 63
Table 16. USFWS rare plants and animals in the New Fork River watershed 73
Table 17. BLM sensitive species within the New Fork River watershed 74
Table 18. USFS sensitive species within the New Fork River watershed 75
Table 19. Tier I SGCN within the New Fork River watershed 76
Table 20. Fish species observed in the New Fork River watershed 80
Table 21. Recorded observations of flannelmouth sucker, roundtail chub, and Colorado River cutthroat in WGFD's StreamLake Database 81
Table 22. Permitted, wet and dry year irrigated acreage 82
Table 23. Points of diversion, conveyances and permitted flows 87
Table 24. Stock reservoirs in the New Fork watershed 96
Table 25. Small water project evaluation factors 103
Table 26. Small water project evaluation matrix results and ranking (listed in rank order) 104
Table 27. Proposed irrigation projects 110
Table 28. Irrigation projects excluded from further consideration 113
Table 29. Proposed wildlife/livestock water source projects 115
Table 30. Wildlife/livestock water source projects excluded from further study 117
Table 31. Proposed small water storage projects 119
Table 32. Small water storage projects excluded from further consideration 120
Table 33. Summary of alternative reservoir sites 123
Table 34. Opinion of Probable Projected Cost – Willow Lake – July 2017 132
Table 35. Opinion of Probable Projected Cost – Site 9 – July 2017 133
Table 36. Opinion of Probable Projected Cost – Site 7 – July 2017 134
Table 37. Summary of Dam Costs 135

Table 38. Estimated Annual O&M Costs 135
Table 39. Small water projects screening-level permits, notifications, and approvals matrix..... 137
Table 40. Landownership, lead agencies, and likely permit requirements for the potential reservoir projects 141
Table 41. Funding source summary..... 142

Figures

Figure 1. Study area. 4
Figure 2. Land ownership distribution in the New Fork River watershed. 5
Figure 3. Land ownership in the New Fork River watershed. 6
Figure 4. Land use and land cover distribution in the New Fork River watershed. 7
Figure 5. Land cover in the New Fork River watershed. 8
Figure 6. Special designated areas within the New Fork River watershed. 10
Figure 7. Oil and gas development in the New Fork River watershed. 12
Figure 8. Permitted mines in the New Fork River watershed. 13
Figure 9. Transportation and energy infrastructure in the New Fork River watershed..... 15
Figure 10. Federal grazing allotments in the New Fork River watershed..... 16
Figure 11. Known cultural resource sites in the New Fork River watershed..... 23
Figure 12. Average annual precipitation (1981–2010) across the New Fork River watershed. 24
Figure 13. Average temperatures at the Cora NWS station, 1979–2013. 27
Figure 14. Average temperatures at the Pinedale NWS station, 1948–2016. 28
Figure 15. Average temperatures at the Boulder Rearing NWS station, 1989–2016. 28
Figure 16. Average monthly precipitation at NWS stations within the New Fork River watershed. 29
Figure 17. Total annual precipitation at NWS stations within the New Fork River watershed. 29
Figure 18. Typical flow hydrograph shape for rivers in the New Fork River watershed. 31
Figure 19. USGS continuous flow gages in the New Fork River watershed. 33
Figure 20. Annual stream discharge volumes for wet, normal and dry years. 38
Figure 21. Average annual discharge volume by HUC-12 (cumulative)..... 39
Figure 22. Peak monthly average discharge by HUC-12 (cumulative). 40
Figure 23. Broad level stream classification delineation showing longitudinal, cross-sectional and plan-views of major stream types. 41
Figure 24. Layout of Level I stream type classification within the New Fork River watershed. 43
Figure 25. Waters assessed by WDEQ and statuses reported in 2014. 46
Figure 26. Sublette County Conservation District water quality monitoring locations. 47
Figure 27. Dischargers permitted by WDEQ. 49
Figure 28. MLRAs in the New Fork River watershed. 50
Figure 29. LANDFIRE vegetation classes. 51
Figure 30. Common vegetation classes in the New Fork River watershed..... 52
Figure 31. NRCS Ecological Sites in the New Fork River watershed. 54
Figure 32. NWI wetlands within the New Fork River watershed. 56
Figure 33. NWI wetlands intersecting irrigated lands in the New Fork River watershed. 60
Figure 34. NWI wetlands showing the irrigation network..... 61
Figure 35. Mule deer range in the New Fork River watershed. 65

Figure 36. Antelope range in the New Fork River watershed. 66
Figure 37. Elk range in the New Fork River watershed. 67
Figure 38. Moose range in the New Fork River watershed. 68
Figure 39. Mule deer migration route through the New Fork River watershed. 69
Figure 40. Greater sage-grouse critical habitats in the New Fork River watershed. 71
Figure 41. Long-billed Curlew study site in the New Fork River watershed. 77
Figure 42. Green River Basin Wetland Complex. 79
Figure 43. Irrigation districts in the New Fork River watershed. 83
Figure 44. Permitted and wet year irrigated lands in the New Fork River watershed. 84
Figure 45. Irrigation method (wet year) in the New Fork River watershed. 85
Figure 46. Irrigation network showing permitted flows in the New Fork River watershed 86
Figure 47. Average annual percent shortage – permitted scenario. 91
Figure 48. City of Pinedale municipal water system. 93
Figure 49. Existing wells and springs permitted for livestock watering. 94
Figure 50. Stock reservoirs permitted by the Wyoming State Engineer's Office. 95
Figure 51. Existing dams in the New Fork River watershed 99
Figure 52. Locations of the 70 small water projects identified by watershed stakeholders. 101
Figure 53. Potential reservoir sites. 122
Figure 54. Plan view of the proposed Willow Lake modifications. 127
Figure 55. Oblique view of the proposed Willow Lake modifications. 128
Figure 56. Plan view of Site 9. 129
Figure 57. Oblique view of Site 9. 130

Abbreviations and Acronyms

BLM	Bureau of Land Management (U.S. Department of the Interior)
ESA	Endangered Species Act
ESD	ecological site description
GRCWC	Green River Core Wetland Complex
HUC	hydrologic unit code
MLRA	Major Land Resource Areas
NOAA	National Oceanic and Atmospheric Administration (U.S. Department of Commerce)
NRCS	Natural Resource Conservation Service (U.S. Department of Agriculture)
NRHP	National Register of Historic Places
NWI	National Wetland Inventory
NWS	National Weather Service (U.S. Department of Commerce)
SGCN	Species of Greatest Conservation Concern
SHPO	State Historic Preservation Office
SNOTEL	snow telemetry
USFS	U.S. Forest Service (U.S. Department of Agriculture)
USFWS	U.S. Fish and Wildlife Service (U.S. Department of the Interior)
USGS	U.S. Geological Survey (U.S. Department of the Interior)
WDEQ	Wyoming Department of Environmental Quality
WGFD	Wyoming Game and Fish Department
WRCC	Western Regional Climate Center

This page is left intentionally blank.

1 Introduction

1.1 Background

In 2015, the Sublette County Conservation District (SCCD) requested that the Wyoming Water Development Commission (WWDC) conduct a comprehensive study of the New Fork River Watershed and its water resources. The local sponsors requested that the Level I watershed study evaluate watershed function; assess wetland and riparian conditions; develop geomorphic classifications; and identify resource concerns and water-development opportunities on irrigated lands, rangelands, wetlands, and streams. In June 2016, the WWDC approved funding for the watershed study and then contracted with Tetra Tech, Inc. and its subconsultants, Rio Verde Engineering and RJH Consultants, Inc., to provide technical and professional services for the New Fork River Watershed Level I Study in 2016.

The New Fork River Watershed Study is a comprehensive evaluation and an initial inventory of the water and land resources within the study area. This Level I study provides important information that the SCCD (the study's local sponsor) and the WWDC (the study's sponsor) can use in developing water resources and implementing conservation practices that address water- and land-resource concerns within the study area. This watershed study includes in-depth descriptions about needed water-development projects that could provide economic, ecological, and social benefits to the state of Wyoming and its citizens.

The WWDC classifies projects according to three "levels:" Level I projects include planning studies and reconnaissance, Level II projects cover feasibility studies, and Level III is the design and construction phase for projects. Typically, within a watershed, the process begins with a Level I planning study. This is not the case, however, in the New Fork River Watershed. The *New Fork Dam Enlargement Level II Study* was initiated in 2015 and the final report was completed in April 2017 (RJH Consultants 2017). The Level II study investigated the potential to increase the storage capacity of the New Fork Lakes. The primary study area for the New Fork Dam Enlargement Level II study was located within, but did not include, the entire New Fork River watershed. The Level II study included:

- Conducting stream gaging during 2015 and 2016 in five waterways throughout the New Fork drainage basin.
- Developing a surface water allocation model (StateMod) for the entire New Fork drainage basin.
- Investigating potential dam and reservoir sites upstream of Pine Creek on the New Fork, associated tributaries, and potentially on-channel locations.
- Identifying potential conservation and screening measures and the relationship to new basin storage.
- Developing three concept designs for potential storage options.
- Performing environmental and permitting analyses for the sites of the three concept designs.

The StateMod developed as a component of the Level II study was relied upon for the assessment of water use and availability in this Level I study.

1.2 Purpose

The intent of this report, accompanied by the study's digital library and geographic information system (GIS) geodatabase, is to provide the results of the New Fork River Watershed Level I Study. This Level I

watershed study included reviewing previously conducted work contained in numerous databases, studies, and reports regarding the natural resources within the study area. Additionally, the information reviewed and determined to be relevant to the study's purpose was compiled into a "digital library" (Appendix A) and a GIS Geodatabase (Appendix B).

The purpose of this Level I watershed study is to combine the available data and information with the study-generated inventory data to develop a comprehensive Watershed Management and Rehabilitation Plan that outlines proposed and potential water-development opportunities. To accomplish this effort, the following objectives were completed:

- Foster communication among residents and landowners, the local sponsor (e.g., the SCCD), and the WWDC.
- Solicit public participation in the watershed study.
- Inventory and evaluate the watershed with emphasis on surface water quantity and quality in addition to upland and riparian conditions.
- Perform a geomorphic classification of the major tributaries in the study area to identify unstable reaches and improvement options to restore channel stability.
- Assess existing irrigation systems and generate rehabilitation alternatives for the irrigators participating in the study.
- Evaluate existing surface water features, storage requirements, and potential opportunities to improve water availability for livestock and wildlife.
- Prepare a Watershed Management and Rehabilitation Plan that includes problem areas and proposes improvement alternatives within the watershed.
- Identify permits, easements, and clearances necessary for plan implementation.
- Estimate costs for proposed improvement alternatives and potential projects and identify potential sources of funding.

1.3 Document Content

Section 1.0, Introduction, explains the background of the watershed study effort. Section 2.0, Watershed Description, provides a description of the watershed, including the natural and socioeconomic features relevant to developing an understanding of how and why the watershed functions as it does. It also provides insight into the features of the watershed that rely upon the waters of the New Fork River watershed, including such things as the agricultural community, drinking water supply, and fish and wildlife. Section 3.0, Watershed Inventory, discusses water use and availability and provides an inventory of the existing water uses in the watershed. Section 4, the Watershed Management and Rehabilitation Plan, uses the information from Sections 2 and 3 to inform a technically sound, practical in nature, and economically feasible plan to improve water use and function in the New Fork River watershed. Section 5, Cost Estimates, are compiled costs for small water and large water storage project conceptual designs. Section 6, Permits, Notification, and Approvals, describes the typical required permits, notifications, and approvals for small water projects and large water storage projects. Section 7, Funding Opportunities, identifies funding sources that might be available to assist with project implementation costs. Section 8, Stakeholder Involvement, will summarize the efforts taken to engage and promote participation by stakeholders throughout this project. Section 9 identifies the overall conclusions and recommendations compiled for this project, and Section 10 offers the list of references used.

2 Watershed Description

The New Fork River is the uppermost major tributary of the Green River in Wyoming. It flows about 70 miles, entirely within Sublette County (**Figure 1**). The New Fork River drains a watershed of 1,257 square miles in southwestern Wyoming, south of the Wind River Range; the watershed is in the U.S. Geological Survey's (USGS) hydrologic unit code (HUC) 14040102. Its origin is at the Lozier Lakes in the Wind River Range, at just over 10,000 feet above sea level, in the Bridger–Teton National Forest. From there it flows southwest through a steep and narrow glacial canyon; it comes out of the mountains about 10 miles north of Cora, where it widens into the New Fork Lakes. After flowing out of the mountains, the New Fork River flows south then southeast, past Cora and on to Pinedale. Primary tributaries along this reach are Willow, Pine and Pole creeks; each discharging into the New Fork River from the east. At Boulder, the New Fork River receives Boulder Creek and turns south again. The East Fork River joins the New Fork River a few miles to the south. From the confluence with the East Fork River, the New Fork River meanders generally southwest between low bluffs and joins the Green River about 6 miles east of Big Piney.

The following sub-sections provide the foundation and context for the **Watershed Inventory (Section 3)** and **Watershed Management and Rehabilitation Plan (Section 4)**, by describing the environmental and socioeconomic setting in the New Fork River watershed.

2.1 Land Use and Management

This subsection first presents high-level information about who owns and manages the land, how it's used, and describes the types and spatial distribution of specially designated areas within the watershed. This is followed by more detailed information about specific land uses, including oil and gas development and production, mining and mineral extraction, transportation, and agriculture.

2.1.1 Land Ownership

The majority of the New Fork River watershed is publicly owned (78 percent), with the U.S. Forest Service (USFS), Bureau of Land Management (BLM), tate of Wyoming, and Bureau of Indian Affairs owning 46, 28, 22, and less than one percent of the total, respectively (**Figure 2**). Most of the private lands are located at lower elevations along the primary stream valleys (**Figure 3**). The Bridger–Teton National Forest lands occupy the mountains to the east, and BLM ownership is primarily within the range lands to the west (**Figure 3**).

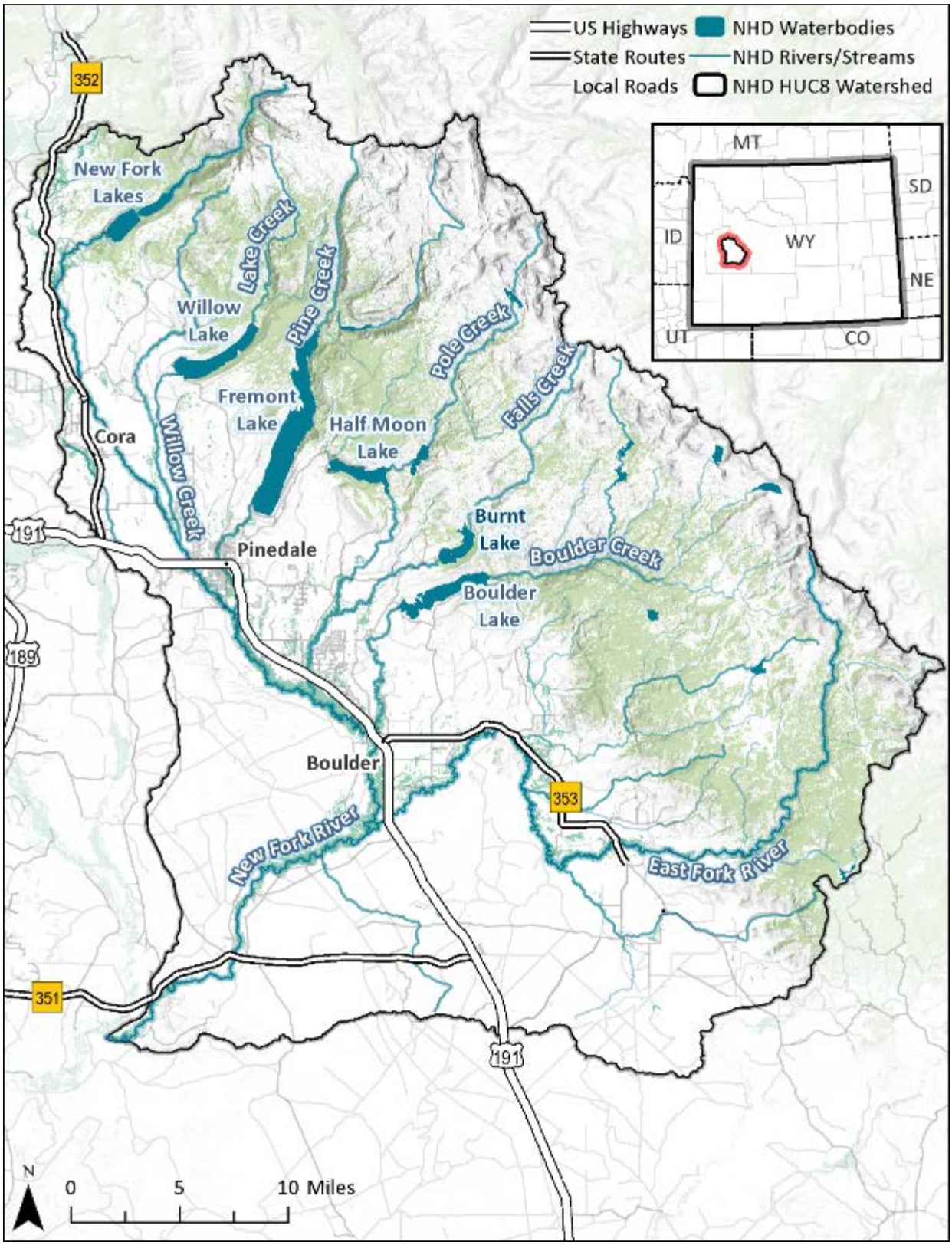

Figure 1. Study area.

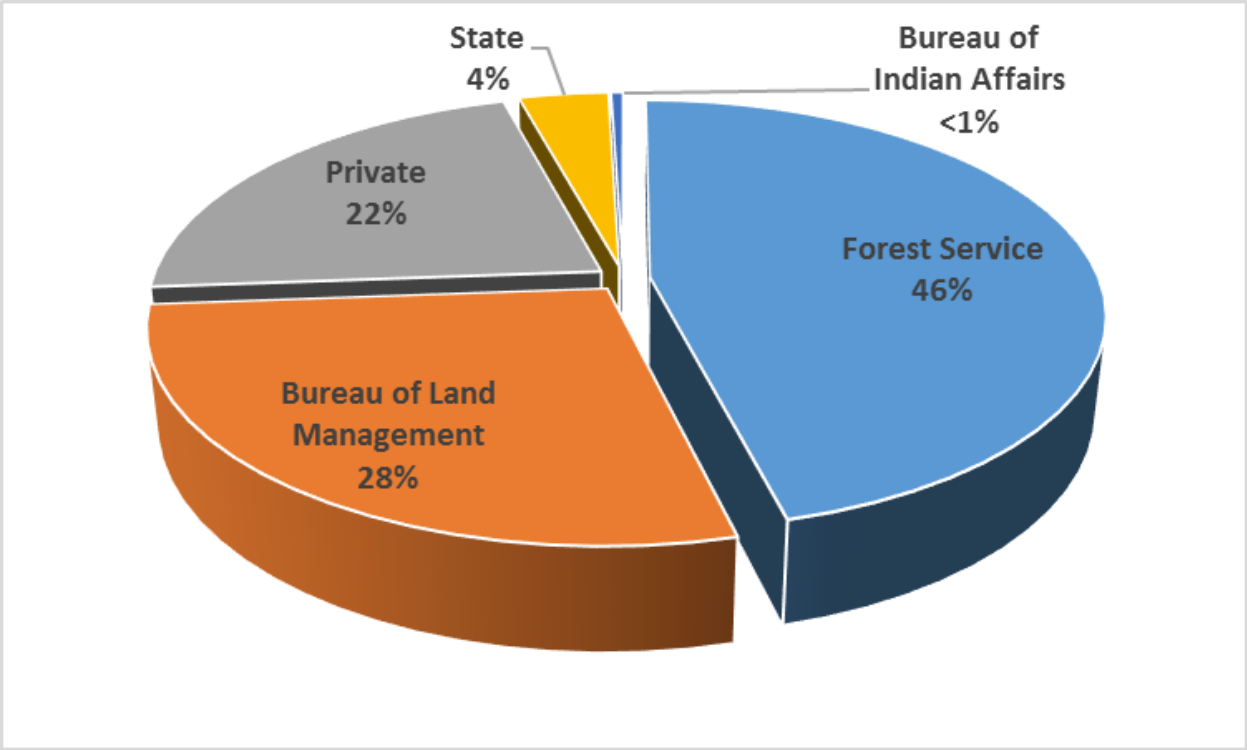

Figure 2. Land ownership distribution in the New Fork River watershed.

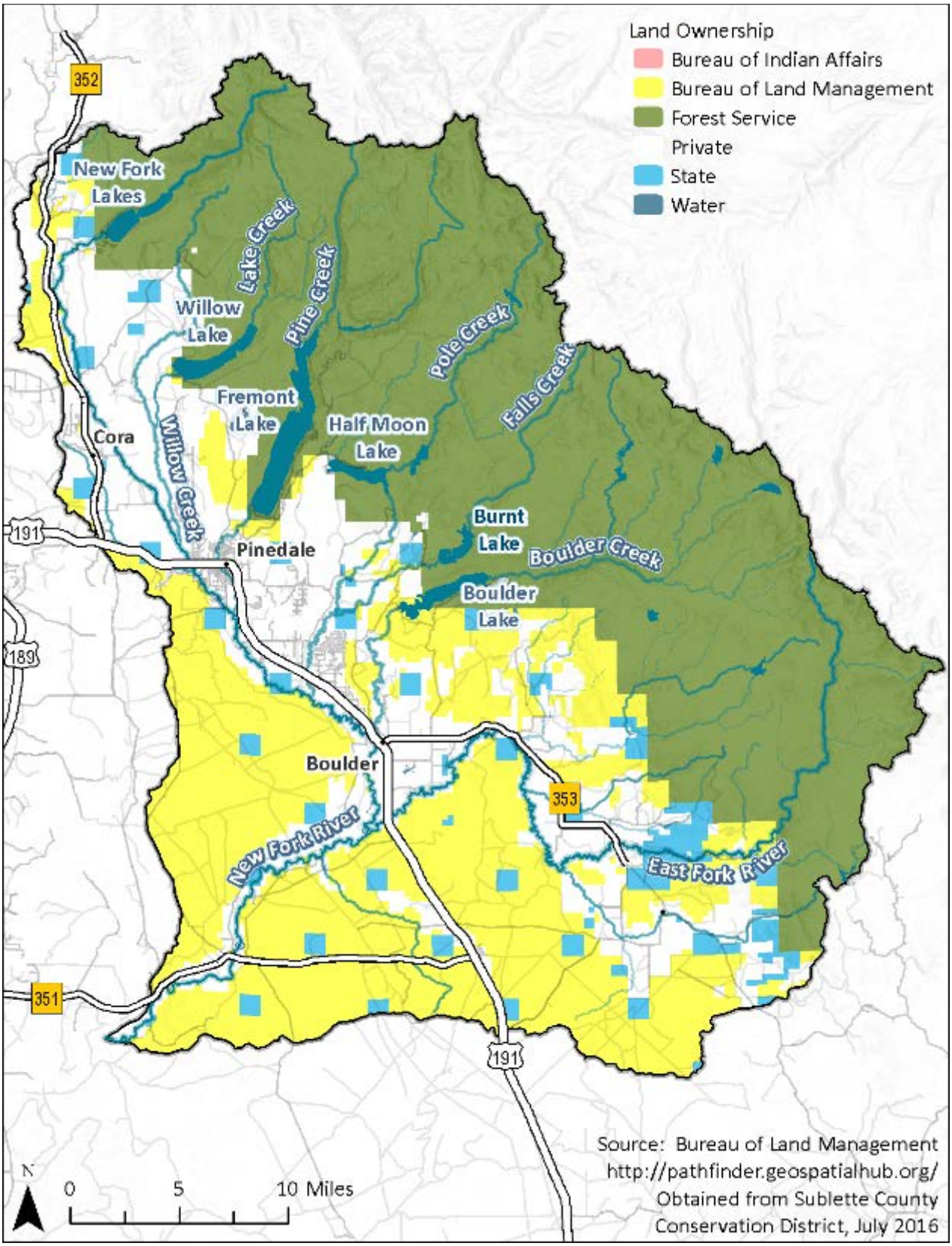

Figure 3. Land ownership in the New Fork River watershed.

2.1.2 Land Use and Land Cover

The majority of the watershed is undeveloped. According to the National Land Cover Database developed to represent the year 2011, the New Fork River watershed is comprised of shrub land (58 percent), evergreen forest (16 percent), herbaceous grasslands (10 percent), and pasture/hay (6 percent) (**Figure 4** and **Figure 5**). Developed lands (i.e., residential and commercial land uses) comprise less than one percent of the watershed area.

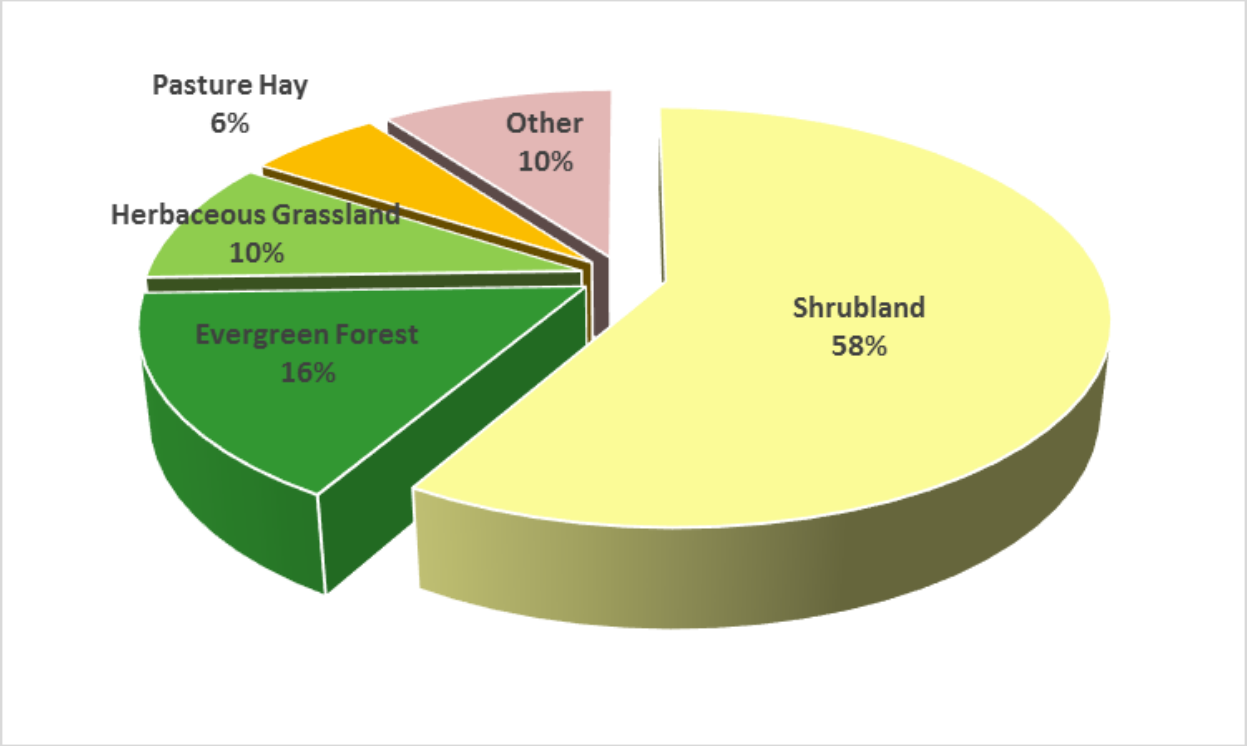

Figure 4. Land use and land cover distribution in the New Fork River watershed.

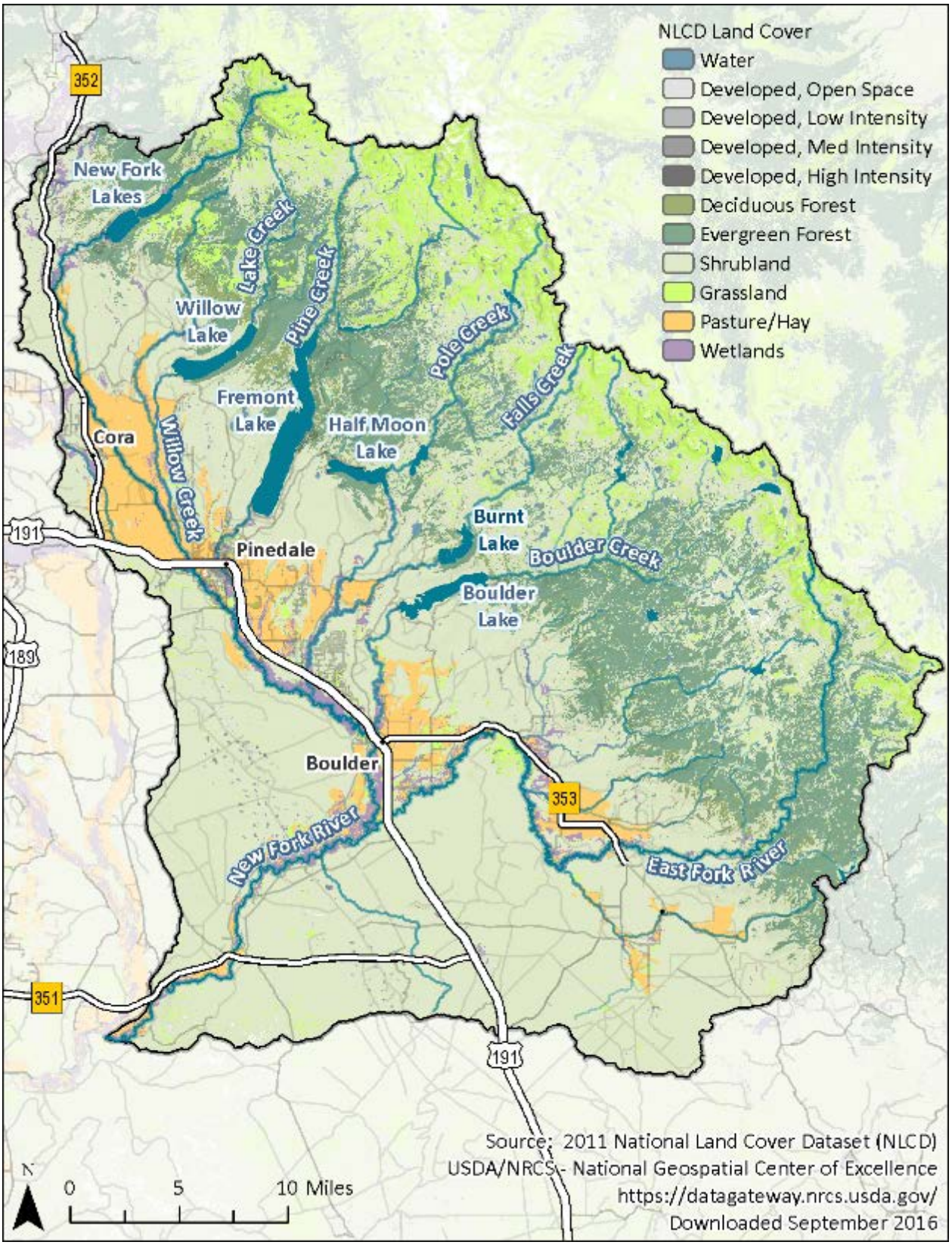

Figure 5. Land cover in the New Fork River watershed.

2.1.3 Special Designated Areas

Approximately 47 percent of the New Fork River watershed is under some form of special management by the state or federal government (**Table 1** and **Figure 6**). Six types of areas are designated in the New Fork River watershed:

- Designated Wilderness Areas
- Wilderness Study Areas
- Special Recreation Management Areas (managed by BLM)
- Areas of Critical Environmental Concern (managed by BLM)
- Management Areas (managed by BLM)
- Wildlife Habitat Management Areas (managed by Wyoming Game and Fish Department [WGFD])

These areas are described in Appendix C – Special Designated Areas.

Table 1. Special Designated Areas within the New Fork River watershed

SPECIAL DESIGNATED AREA	AREA (ACRES)	RELATIVE AREA (PERCENT)
Designated Wilderness Areas		
Bridger Wilderness	243,664	30%
Wilderness Study Areas		
Scab Creek	7,711	1%
BLM Special Recreation Management Areas (designated by the BLM)		
Scab Creek (Front Country Zone)	4,436	1%
Boulder Lake	5,237	1%
CCC Ponds Recreation Area	1,009	<1%
Green and New Fork Rivers - Lower Zone	1,873	<1%
BLM Areas of Critical Environmental Concern		
New Fork Potholes	1,820	<1%
Trapper's Point	1,926	<1%
BLM Management Areas		
Ross Butte Ecosystem	7,412	1%
Wind River Front	96,873	12%
WGFD Wildlife Habitat Management Area		
Soda Lake	3,801	<1%
Half Moon	3,760	<1%
Fall Creek	686	<1%
Total	***380,208***	***47%***

Note: Areas are rounded to the nearest acre and percent.

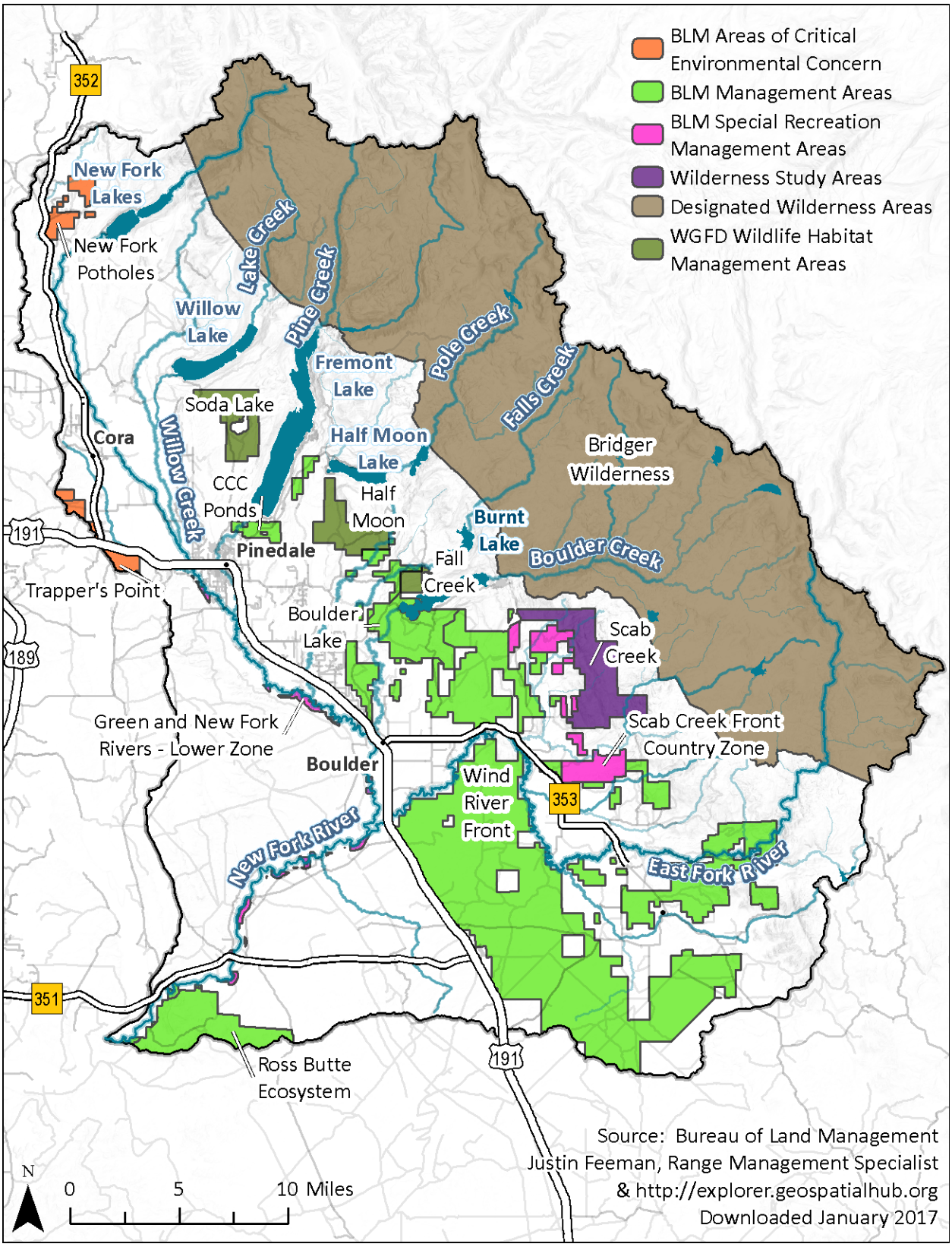

Figure 6. Special designated areas within the New Fork River watershed.

2.1.4 Oil and Gas Production

The majority of producing wells within the New Fork River Watershed lie within the Pinedale Anticline Field or Project Area (PAPA), on a narrow section of land that stretches from just outside the Pinedale town limits south along U.S. Highway 191 to about 70 miles north of Rock Springs, Wyoming (**Figure 7**). The PAPA consists of 197,345 acres. Approximately 80 percent of the surface is federally owned, 5 percent is state of Wyoming-owned, and 15 percent is privately owned. The major geographic areas encompassed by this field include Stewart Point, Riverside, Mesa, and the Anticline. A smaller number of producing wells are contained within the northerly portion of what is known as the Jonah Field. This is a large producing field that predominantly lies within the Upper Green River Watershed. The northern tip however, lies within the subject New Fork River watershed. Other dispersed wells are positioned in the easterly and northerly extents of the New Fork River watershed.

Natural gas is the primary focus of producers within the subject watershed. Drilling began on the PAPA in the late 1930s and progressed through the 1980s with limited success extracting gas from the underlying rock formations. In the early 1990s, a new method known as hydraulic fracturing (fracking) was developed that allowed the drilling companies to produce vastly more quantities of gas. As a result, the PAPA and Jonah Field are now two of the largest producing natural gas fields in the United States. Current and historic production quantities are available on the Wyoming Oil and Gas Conservation Commission website at http://wogccms.state.wy.us.

The referenced natural gas industry, which includes exploration/drilling, production, and measurement, largely impacts the socioeconomics within the New Fork River watershed. The royalties generated from this huge natural gas reserve affect all individuals within the watershed, directly and/or indirectly.

2.1.5 Mining and Mineral Resources

According to the Wyoming Department of Environmental Quality Land Quality Division (personal communication, Matthew Dillon. February 23, 2017) the only regulated mines on record for the New Fork River watershed are 23 sand/gravel operations and a single rock quarry (**Figure 8**).

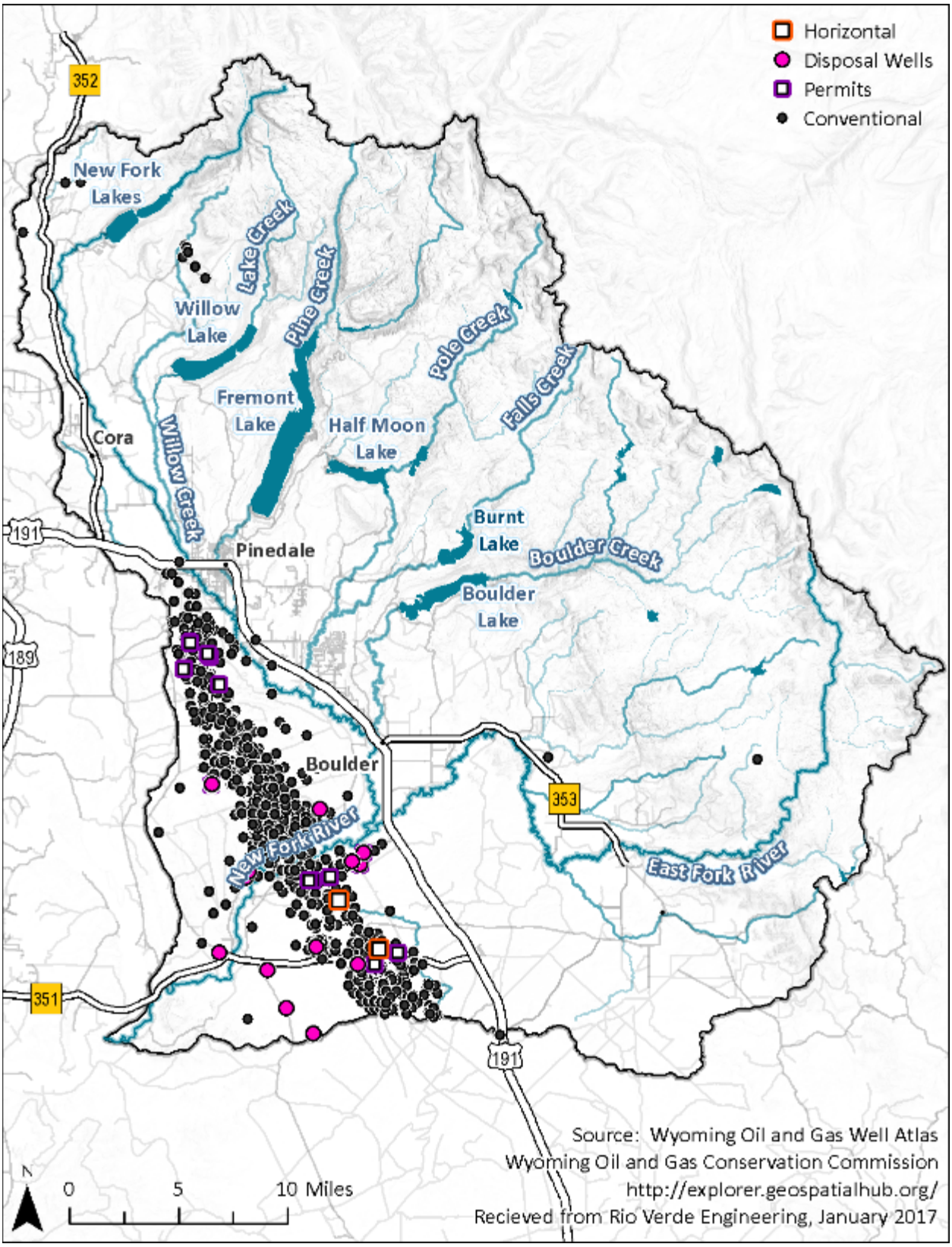

Figure 7. Oil and gas development in the New Fork River watershed.

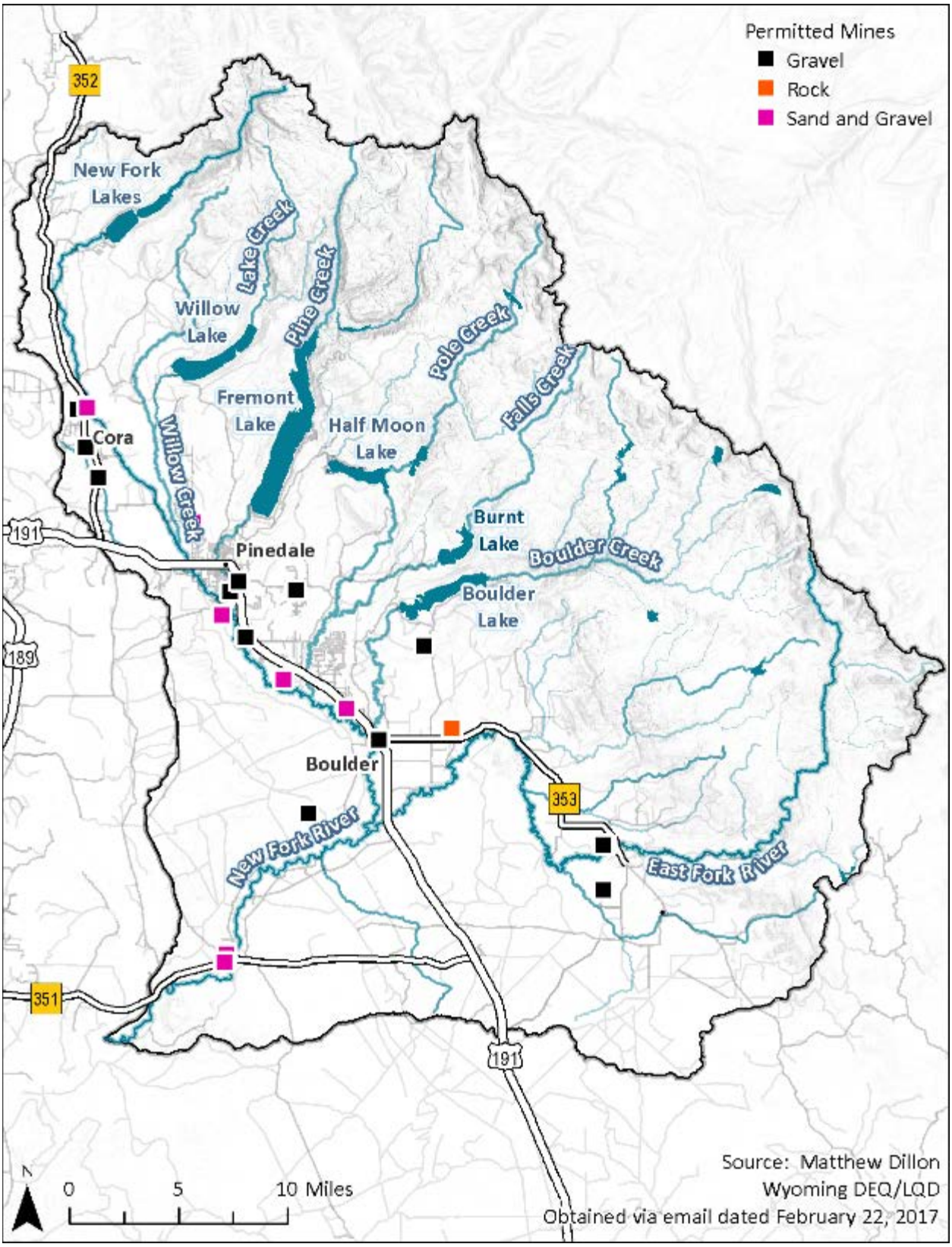

Figure 8. Permitted mines in the New Fork River watershed.

2.1.6 Transportation and Energy Infrastructure

The New Fork River watershed area is not directly served by any Interstate Highways or rail lines. The principal two-lane highways within the watershed are U.S. Highway 191 and state highways 351, 352, and 353 (**Figure 9**). Highway 191 enters the western portion of the watershed from Jackson Hole, passes through Pinedale and heads to the south toward Rock Springs. State Highway 351 (Big Piney Cutoff) connects highways 189 and 191. State Highway 352 services Cora from Highway 191 between Daniel Junction and Pinedale. State Highway 353 provides access to the east toward Lander.

Electric power service within the watershed is provided by Rocky Mountain Power. A single major transmission line serves the City of Pinedale (**Figure 9**). Major oil and gas conveyances in the watershed include approximately 150 miles of natural gas pipelines and 70 miles of condensate pipeline (**Figure 9**).

2.1.7 Agriculture

Grass hay/pasture is the predominant crop in the New Fork River watershed, and livestock are the primary agricultural commodity. Typically during the summer and early fall, livestock are grazed on public lands. During the winter and early spring, livestock are commonly pastured on private lands at lower elevations in the watershed. BLM and USFS administer grazing allotments on federal lands within the watershed. The USFS allotments are located in the mountains in the eastern portions of the watershed, while BLM allotments are primarily located in the basin and foothills (**Figure 10**). Allotment boundaries do not typically coincide with watershed boundaries; therefore, some of these allotments do not fall entirely within the New Fork River watershed. The average size of BLM allotment in the watershed is 3,231 acres, with an average stocking rate of 15.1 acres per animal unit months[1] (**Table 2**). The average size of USFS allotment in the watershed is 16,260 acres, with an average stocking rate of 12.2 acres per animal unit months (**Table 3**).

[1] Data obtained from Justin Freeman, Range Management Specialist, Pinedale Field Office, Bureau of Land Management. September 7, 2016.

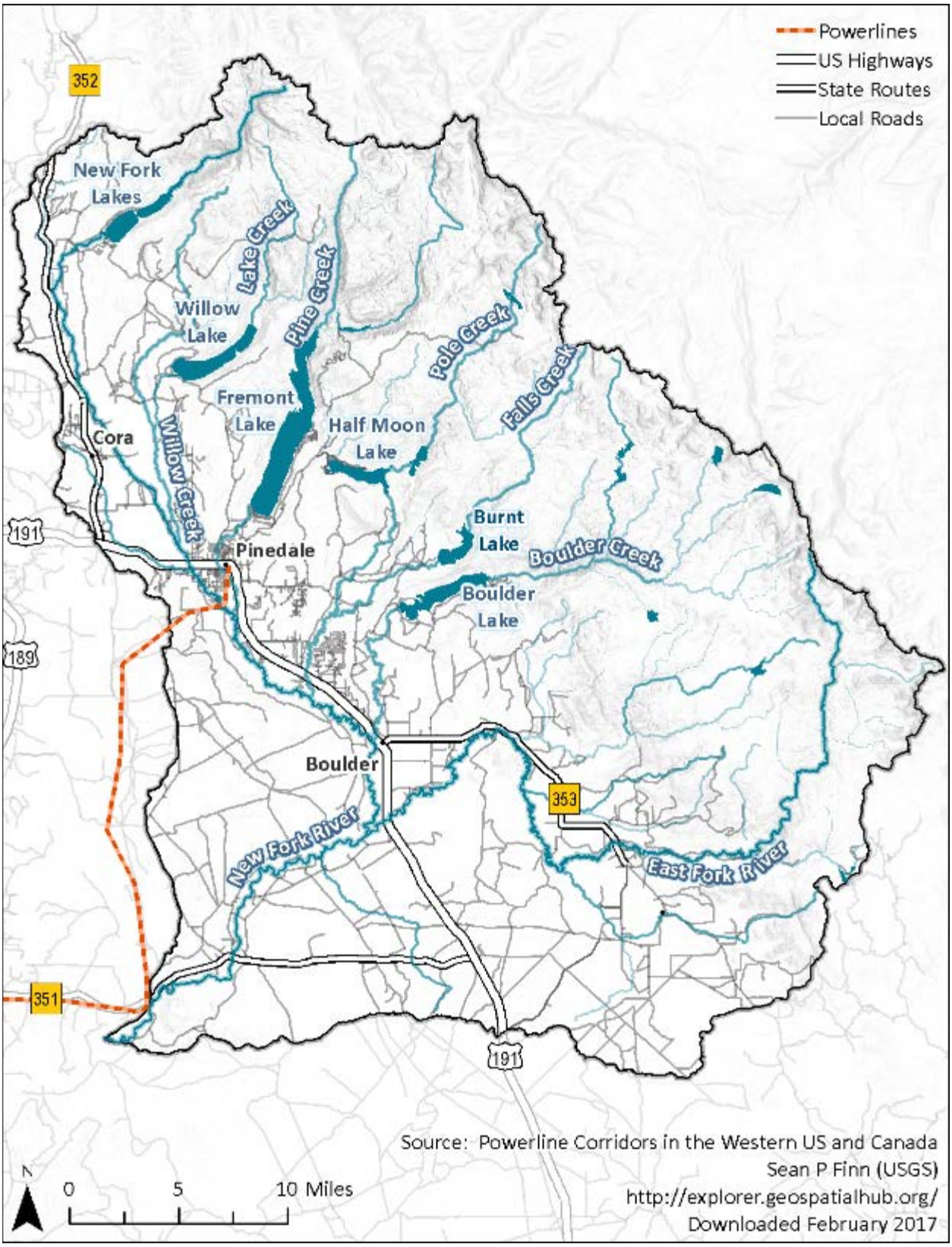

Figure 9. Transportation and energy infrastructure in the New Fork River watershed.

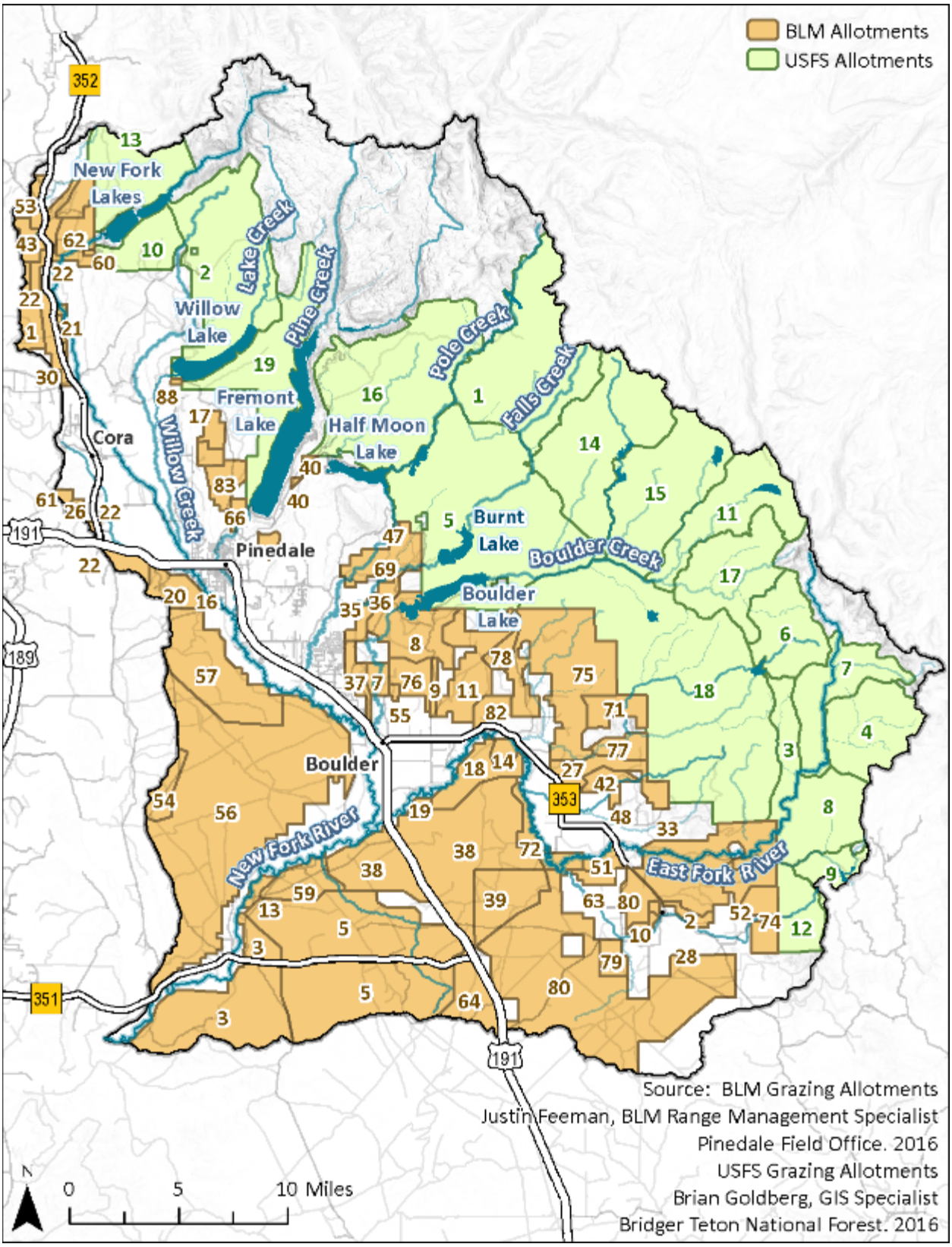

Figure 10. Federal grazing allotments in the New Fork River watershed.

Table 2. BLM grazing allotments

MAP #	ALLOTMENT NAME	CLASS	TOTAL AUMS	TOTAL ACRES	ACRES PER AUM	ACRES WITHIN WATERSHED	% WITHIN WATERSHED
1	40 Rod Common	C & H	542	3,677	6.8	1,443	39%
2	Big Sandy Ind	C	30	734	24.5	734	100%
3	Blue Rim Desert	C	2826	1,664	14.6	1,664	100%
5	Blue Rim Ind	C	3645	25,261	11.1	14,139	56%
7	Boulder Creek Tracts	C	28	930	33.2	930	100%
8	Boulder Lake Com	C & H	861	5,788	6.7	5,788	100%
9	Boulder S D W	C	96	433	4.5	433	100%
10	Boulter Pasture	C	2	303	151.5	303	100%
11	Bousman Common	C	755	5,180	6.9	5,180	100%
13	Burch individual	C	37	587	15.9	587	100%
14	Butte Ind	C	7	809	115.6	809	100%
15	Canyon Ditch Ind	C & H	165	1,213	7.4	203	17%
16	CB Holding Pen	C	9	30	3.3	30	100%
17	Chain Lakes Ind	C	266	943	3.5	943	100%
18	Chalk Butte Com	C	268	3,356	12.5	3,356	100%
19	Circle 9 Ind	C	89	459	5.2	459	100%
20	Clark-Bloom Common	C	264	2,525	9.6	2,353	93%
21	Cora Road ind	C	87	244	2.8	244	100%
22	Cora Stock Driveway	C	877	247	4.9	11	4%
26	Cora Y Com	C	125	938	7.5	368	39%
27	Cottonwood Common	C & H	371	3,154	8.5	3,154	100%
28	Cowley Tract	C	10	81	8.1	81	100%
29	Dack Individual	C	90	1,240	13.8	1,240	100%
30	Ditch Ind	C	19	176	9.3	176	100%
31	E Cora Road Meadow	C	64	193	3.0	193	100%
32	East Cora Road Ind	C	14	160	11.4	160	100%
33	East Fork Com	C	1244	10,007	8.0	10,007	100%
34	East Fork River Tr. Sage	C	3	25	8.3	25	100%
35	Fall Cr. Pasture	C	10	40	4.0	40	100%

MAP #	ALLOTMENT NAME	CLASS	TOTAL AUMS	TOTAL ACRES	ACRES PER AUM	ACRES WITHIN WATERSHED	% WITHIN WATERSHED
36	Fall Creek	C	166	1,495	9.0	1,495	100%
37	Fayette Ind	C	276	1,412	5.1	1,412	100%
38	Fremont Butte Com	C	2568	21,529	8.4	21,529	100%
39	Fremont Butte Ind	C	477	4,894	10.3	4,894	100%
40	Fremont Lake Ind	C	94	243	3.4	243	100%
42	Gilligan Ind	C	257	1,255	4.9	1,255	100%
43	Glascow Ind	C	187	1,433	7.7	1,253	88%
44	Hay Gulch	C	75	680	9.1	680	100%
47	Hicks Pinedale Ind	C	397	240	0.6	240	100%
48	Hittle Ind.	C & H	95	265	2.8	265	100%
49	Homestead Ind	C	178	640	3.6	203	32%
50	Hot Spring Pasture I	C	32	62	1.9	62	100%
51	Individual Fenced	C	11	994	90.4	994	100%
52	Irish Canyon Tr. Ind	C	30	1,919	64.0	1,919	100%
53	Lauzer Marsh Cr. Ind	C	296	917	3.1	893	97%
54	Luman Individual	C	600	3,015	5.0	1,748	58%
55	Mckinsey Ind	C	68	195	2.9	195	100%
56	Mesa Common	C & H	5003	55,842	11.2	40,712	73%
57	Mount Airy Common	C	758	9,999	13.2	9,544	96%
58	Muddy Meadows	C	20	181	9.1	181	100%
59	New Fork Ind	C	361	2,952	8.2	2,952	100%
60	New Fork Tracts Isol	C	8	80	10.0	80	100%
61	Noble Cora Peak Com	C	390	2,344	6.0	328	14%
62	Noble Tracts Ind	C	136	2,408	17.7	2,408	100%
63	North pasture Ind	C	41	660	16.1	660	100%
64	NW Square Top Ind	C	999	6,992	7.2	3,638	52%
66	Pine Cr. Ind	C	66	665	10.1	665	100%
69	Pole Cr. Ind	C	350	3,570	10.2	3,570	100%
70	Rief Individual	C	66	529	8.0	529	100%

MAP #	ALLOTMENT NAME	CLASS	TOTAL AUMS	TOTAL ACRES	ACRES PER AUM	ACRES WITHIN WATERSHED	% WITHIN WATERSHED
71	Sagebrush Basin Ind	C	193	2,236	11.6	2,236	100%
72	Sandy Fenced ind	C	2946	2,065	0.7	2,065	100%
73	Sandy Ind	C	14	160	11.4	160	100%
74	Sandy Upper Muddy Ind	C	47	2,567	54.6	2,567	100%
75	Scab Cr. Ind	C & H	889	13,726	15.4	13,726	100%
76	Scattered Tracts	C	41	2,110	51.5	2,110	100%
77	Silver Cr. Ind	C	445	1,527	3.4	1,527	100%
78	Soda Lake Com	C	156	988	6.3	988	100%
79	Southwest Past Ind	C	89	1,238	13.9	1,238	100%
80	Square Top Com	C & H	4731	1,801	8.4	1,801	100%
82	Steele Ind	C	184	1,313	7.1	1,313	100%
83	W Fremont Ridge Com	C	293	1,843	6.3	1,843	100%
88	Willow Lake Tracts	C	26	78	3.0	78	100%

Notes: AUM = animal unit month; C = cattle; H = horses.

Table 3. USFS grazing allotments

MAP #	ALLOTMENT NAME	ID NUMBER	STATUS	CLASS	TOTAL AUMS	SEASON OF USE	ACRES PER AUM	TOTAL ACRES	ACRES WITHIN WATERSHED	% WITHIN WATERSHED
1	Baldy Lake	7014	Closed		0			21,199	21,186	99.9%
2	Big Flattop	7003	Active	C	2554	June 16 - Sept 30	8.1	20,692	20,692	100.0%
3	Boundary Creek	7016	Active	C	301	July 1 - Sept 15	13.9	4,171	4,171	100.0%
4	Bunion Creek	7017	Closed		0			16,808	9,629	57.3%
5	Burnt Lake	7004	Active	C	1680	July 1 - Sept 15	21	35,229	35,229	100.0%
6	Cross Lake	7018	Closed		0			7,767	7,767	100.0%
7	East Fork	7021	Closed		0			8,583	8,583	100.0%
8	Irish Canyon	7024	Active	C or S	650/852	July 1 - Sept 10	14.5/11.1	9,450	8,482	89.8%
9	Lamreaux Meadow	7025	Active	C or S	906/1065	July 1 - Sept 10	8.8/7.5	7,744	2,883	37.2%
10	Little Flattop	7005	Active	C	969	July 1 - Sept 30	4.9	4,739	4,739	100.0%
11	Middle Fork	7029	Closed		0			10,941	10,935	99.9%
12	Muddy Canyon	7031	Active	S	440	July 1 - Sept 10	10.4	4,595	4,595	100.0%
13	New Fork-Boulder	7006	Active	C	2041	July 1 - Sept 30	5.4	10,976	8,853	80.7%
14	North Fork	7033	Closed		0			18,138	18,129	99.9%
15	Pipestone	7034	Closed		0			16,451	16,442	99.9%
16	Pole Creek	7007	Active	C	1359	July 11 - Sept 30	32.7	24,695	24,695	100.0%
17	Raid Lake	7036	Closed		0			10,831	10,831	100.0%
18	Silver Creek	7010	Active	C	5155	July 1 - Sept 15	8.4	43,410	43,410	100.0%
19	Soda Lake	7011	Active	C	1051	June 25 - Sept 15	12.1	12,759	12,759	100.0%

Notes: AUM = animal unit month; C = cattle; S = sheep

2.2 Cultural Resources

The Wyoming State Historic Preservation Office (SHPO) provided all known cultural resource sites within the study area on February 21, 2017. The SHPO data lists 1,339 sites that were previously recorded within the study area. These sites are shown on **Figure 11**; a complete listing is provided in Appendix D – Inventoried Archaeological Sites within the New Fork Study Area. The majority of the sites (1,119) are prehistoric and include habitations, lithic scatters, burials, and artifact scatters. Historic sites are the next most common site type (140) and include ranches; infrastructure such as irrigation canals, roads, bridges, and transmission lines; artifact scatters or trash dumps; and various buildings. The majority of the sites are in the southwestern portion of the study area with considerably fewer sites occurring in the eastern half of the study area.

A total of 59 sites contain both prehistoric and historic components, and 21 sites in the database are unknown as to the period of occupation. Most of the sites are recommended as not eligible for listing on the National Register of Historic Places (NRHP) and would not require further work unless specified by the SHPO on a case-by-case basis.

Ten of the sites are listed on the NRHP. Future development projects impacting any of these sites would require extensive consultation and treatment recommendations to be developed. A total of 276 sites are eligible for listing on the NRHP; if future projects impacted such a site, treatment recommendations would need to be developed prior to project work going forward. The remaining 361 sites are either undetermined for the NRHP or the database lists their eligibility as unknown. Each of these sites would require further study to assess eligibility before determining what impacts a future project might or might not have. If any site was determined to be eligible for listing on the NRHP and would be impacted by a future development project, the agencies would require that treatment recommendations be developed.

The lack of previously recorded archaeological sites within a portion of the study area is not an indication that no archaeological sites are located in that area. A cultural resource inventory will likely be required by SHPO for any potential project within the study area that lack previously identified cultural resources.

2.3 Climate

Climatic conditions within the New Fork River watershed are driven primarily by the large topographic change across the watershed from the Wind River mountain range to the north to the high plains in the south and southeast. Much of the incoming precipitation from the Pacific Ocean is released onto the western slopes of the Wind River Range, resulting in a gradient from alpine to semi-arid conditions, with annual, large spring snowmelts from considerable snow depths in the high elevation mountains. Average temperatures are also a product of topography with higher temperatures observed in the lower elevation high plains (Western Regional Climate Center [WRCC] 2016b).

Within the New Fork River watershed, climatic data is available from three National Weather Service (NWS) stations and three snow telemetry (SNOTEL) stations maintained by the Natural Resources Conservation Service (NRCS). The location of the climate stations and the overall trend of average annual precipitation across the watershed is depicted in **Figure 12**. Data used to create this figure was generated using the Parameter-elevation Regressions on Independent Slopes Model (PRISM) by the PRISM Climate Group at Oregon State University (2016). According to the model, lower elevations in the south and southeastern portions of the watershed only receive between 8 and 11 inches annually, while the northernmost portions of the watershed in and around Mammoth Glacier receive upwards of 42 inches annually.

Monitored climate data at NWS and SNOTEL stations were obtained through the WRCC and the National Oceanic and Atmospheric Administration (NOAA) and NRCS, respectively. A summary of temperature and precipitation data collected at NWS stations is presented in **Table 4**. A summary of precipitation data collected at SNOTEL stations is presented in **Table 5**.

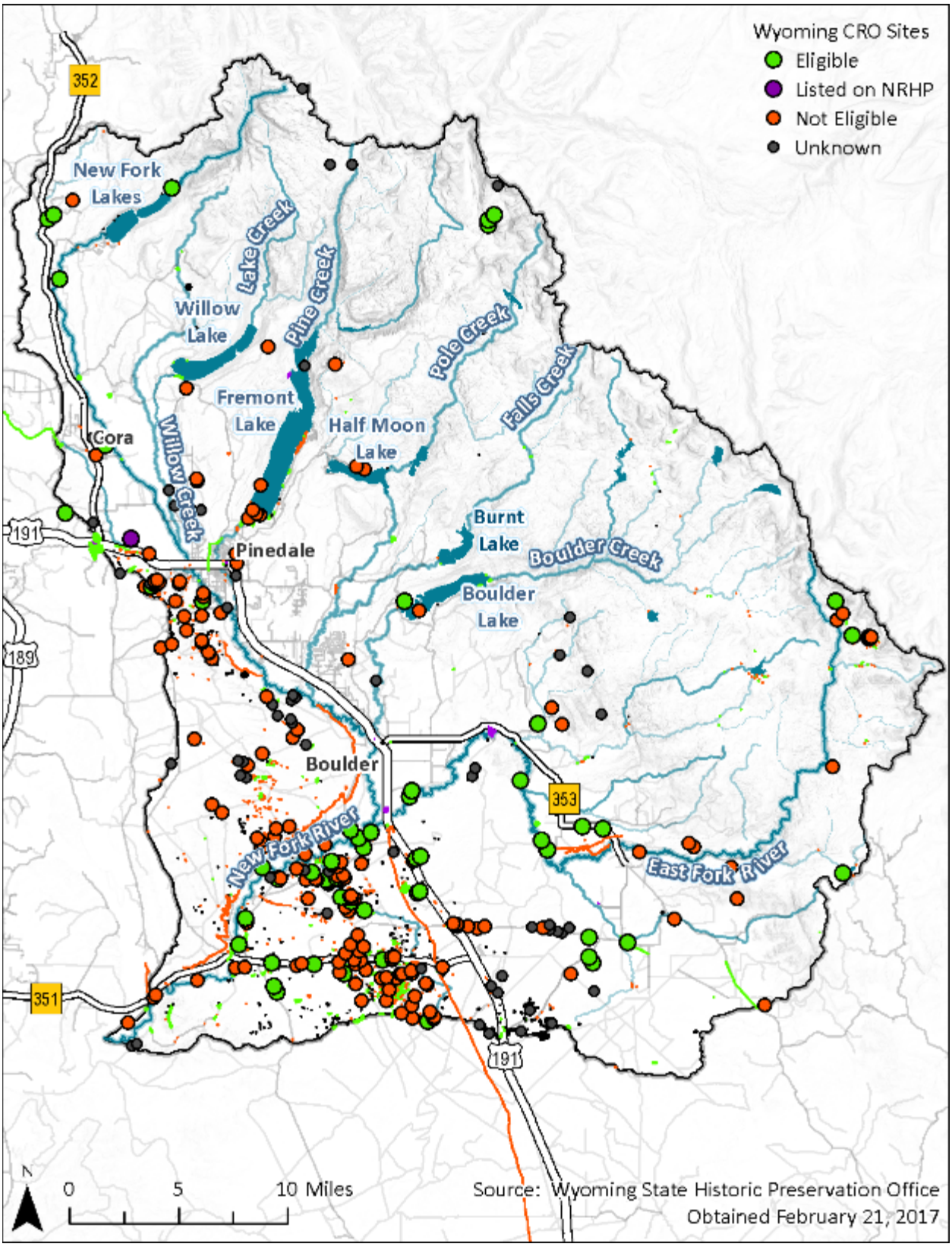

Figure 11. Known cultural resource sites in the New Fork River watershed.

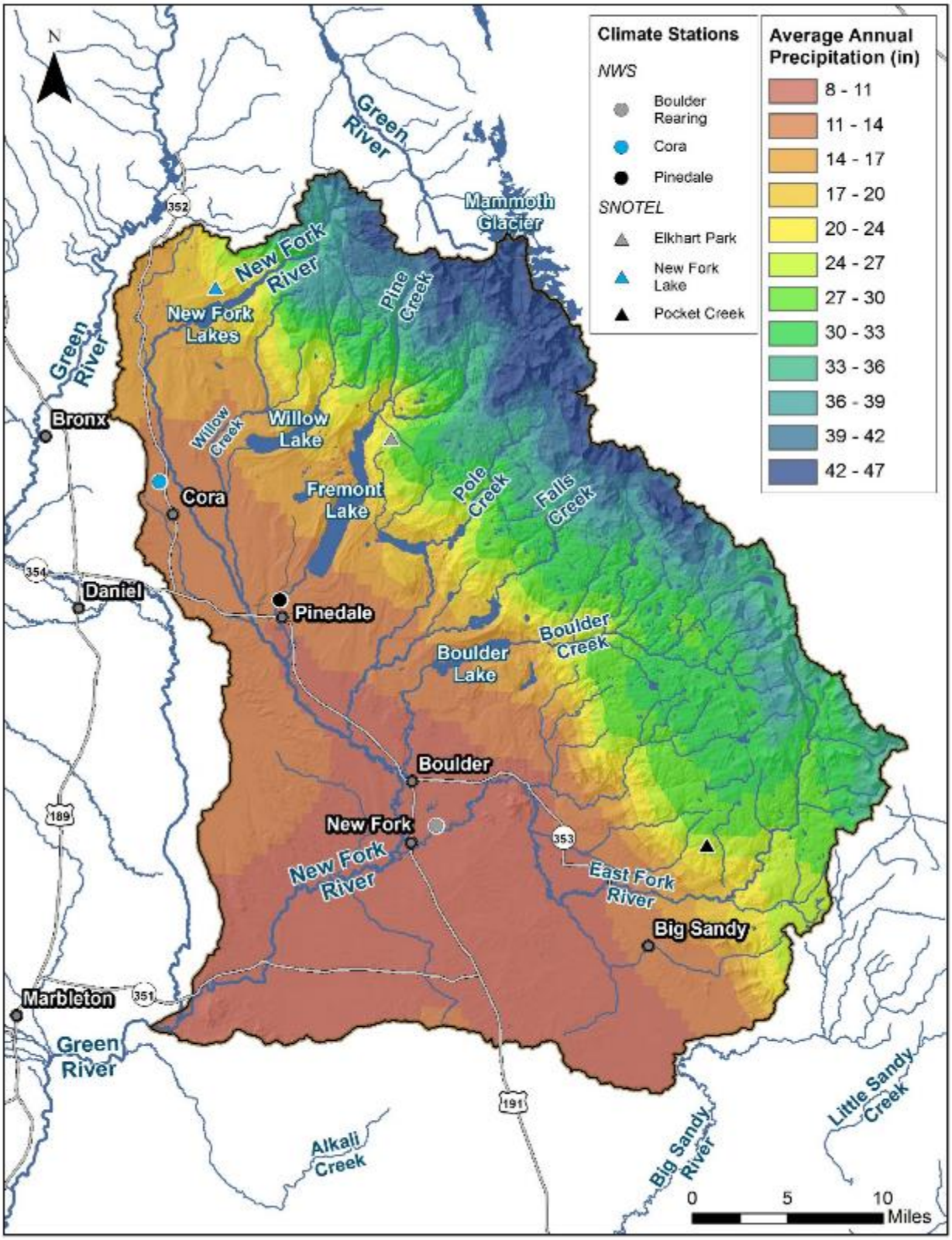

Source: PRISM Climate Group 2012

Figure 12. Average annual precipitation (1981–2010) across the New Fork River watershed.

Table 4. Summary of temperature and precipitation data at NWS stations within the New Fork River watershed

STATION: CORA (480254), 1979–2013													
	JAN	**FEB**	**MAR**	**APR**	**MAY**	**JUN**	**JUL**	**AUG**	**SEP**	**OCT**	**NOV**	**DEC**	**ANNUAL**
Average high (Fahrenheit)	25.3	27.8	36.3	48.3	58.2	67.4	75.9	75.7	66.1	52.8	35.2	25.7	49.6
Average low (Fahrenheit)	-0.2	0.7	10.2	20.6	28.3	34.4	39.7	38	29.6	21.9	9.5	0.9	19.5
Mean temperature (Fahrenheit)	12.5	14.3	23.2	34.4	43.2	50.8	57.5	56.8	47.6	37.4	22.3	13.3	34.5
Average precipitation (inches)	0.9	0.7	0.6	0.7	1.8	1.3	1.2	1.1	1.3	0.9	0.7	0.7	11.9
Average snowfall (inches)	14.4	11.3	8.1	6.1	3.8	0.3	0.0	0.0	1.0	5.0	9.5	13.1	72.5
STATION: PINEDALE (487260), 1948–2016													
	JAN	**FEB**	**MAR**	**APR**	**MAY**	**JUN**	**JUL**	**AUG**	**SEP**	**OCT**	**NOV**	**DEC**	**ANNUAL**
Average high (Fahrenheit)	26.5	29.8	38.1	49.4	60.6	70.4	78.7	77	68.1	55.8	38.4	28.2	51.8
Average low (Fahrenheit)	-0.9	1.1	9.9	20.8	28.5	36.6	41.4	38	30.4	22.2	11.8	1.7	20.1
Mean temperature (Fahrenheit)	12.8	15.4	24.1	35.1	44.6	53.5	60.1	57.5	49.2	39	25.1	15	35.9
Average precipitation (inches)	0.7	0.5	0.6	0.9	1.6	1.3	1.0	1.0	1.1	0.8	0.7	0.7	10.8
Average snowfall (inches)	12.8	11.0	9.1	7.4	3.1	0.3	0.0	0.0	0.9	3.7	9.9	12.5	70.7
STATION: BOULDER REARING (480951), 1989–2016													
	JAN	**FEB**	**MAR**	**APR**	**MAY**	**JUN**	**JUL**	**AUG**	**SEP**	**OCT**	**NOV**	**DEC**	**ANNUAL**
Average high (Fahrenheit)	26.7	29.8	41.1	52.5	62.1	71.5	80.9	79.8	70.3	57.2	40.4	28.4	53.4
Average low (Fahrenheit)	-6.4	-4.7	11.0	21.6	29.3	36.9	42.0	40.0	31.8	21.2	9.1	-3.7	19.0
Mean temperature (Fahrenheit)	10.1	12.6	26.1	37.0	45.7	54.2	61.5	59.9	51.0	39.2	24.7	12.3	36.2
Average precipitation (inches)	0.4	0.5	0.5	0.8	1.4	1.3	0.7	0.8	1.0	0.9	0.4	0.4	9.2
Average snowfall (inches)	5.7	6.8	5.0	4.9	1.6	0.3	0.0	0.0	0.3	3.4	4.6	7.1	39.6

Source: NOAA 2016; WRCC 2016b

Table 5. Precipitation data collected at SNOTEL sites within the New Fork River watershed

STATION: NEW FORK LAKE (661), 1985–2016													
	OCT	**NOV**	**DEC**	**JAN**	**FEB**	**MAR**	**APR**	**MAY**	**JUN**	**JUL**	**AUG**	**SEP**	**TOTAL**
Average end of month snow water equivalent (inches)	0.6	2.6	4.7	6.9	8.9	10.6	10.9	6.3	0.2	0.0	0.0	0.1	
Average cumulative precipitation (inches)	1.3	3.3	5.1	7.0	8.8	10.4	12.0	14.5	16.2	17.2	18.4	19.8	
Average total monthly precipitation (inches)	1.3	2.0	1.8	1.9	1.7	1.6	1.6	2.5	1.7	0.9	1.2	1.4	19.8
STATION: ELKHART PARK G.S. (468), 1980–2016													
	OCT	**NOV**	**DEC**	**JAN**	**FEB**	**MAR**	**APR**	**MAY**	**JUN**	**JUL**	**AUG**	**SEP**	**TOTAL**
Average end of month snow water equivalent (inches)	1.2	3.2	5.6	7.8	9.9	12.2	13.3	11.9	2.3	0.0	0.0	0.2	
Average cumulative precipitation (inches)	2.0	4.1	6.4	8.5	10.4	12.7	14.9	17.8	19.7	20.9	22.4	24.5	
Average total monthly precipitation (inches)	2.0	2.1	2.3	2.1	2.0	2.2	2.2	2.9	1.9	1.2	1.4	2.1	24.5
STATION: POCKET CREEK (1133), 2009–2016													
	OCT	**NOV**	**DEC**	**JAN**	**FEB**	**MAR**	**APR**	**MAY**	**JUN**	**JUL**	**AUG**	**SEP**	**TOTAL**
Average end of month snow water equivalent (inches)	2.2	3.9	5.8	7.2	8.9	10.6	12.4	11.6	2.8	0.0	0.0	0.2	
Average cumulative precipitation (inches)	2.6	4.0	5.8	7.4	9.0	10.4	12.9	15.8	18.2	19.5	21.1	22.7	
Average total monthly precipitation (inches)	2.6	1.4	1.8	1.6	1.6	1.5	2.5	2.9	2.4	1.3	1.5	1.7	22.7

Source: NRCS 2016; WRCC 2016b

Average high and low temperatures for each of the three NWS stations' period of record are presented in **Figure 13**, **Figure 14**, and **Figure 15**. **Figure 16** summarizes the average monthly precipitation, and **Figure 17** summarizes the total annual precipitation for each NWS weather station for their associated period of record.

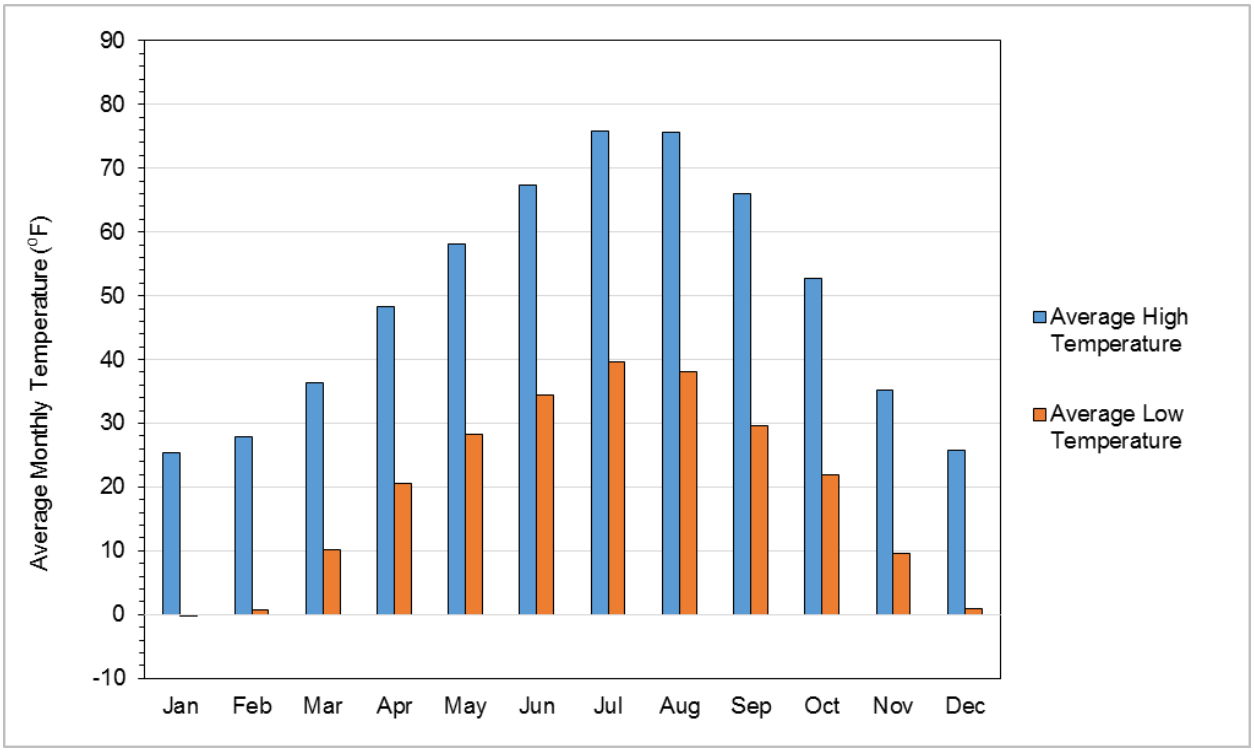

Source: WRCC 2016b

Figure 13. Average temperatures at the Cora NWS station, 1979–2013.

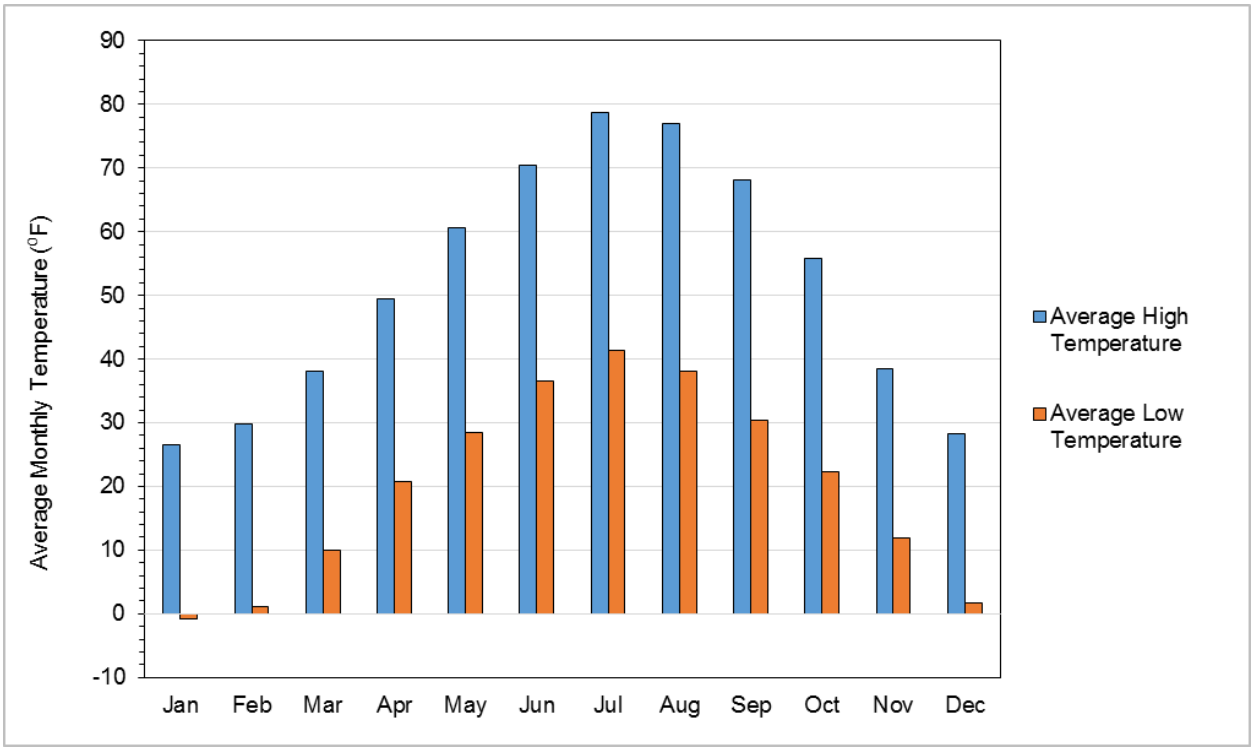

Source: WRCC 2016b

Figure 14. Average temperatures at the Pinedale NWS station, 1948–2016.

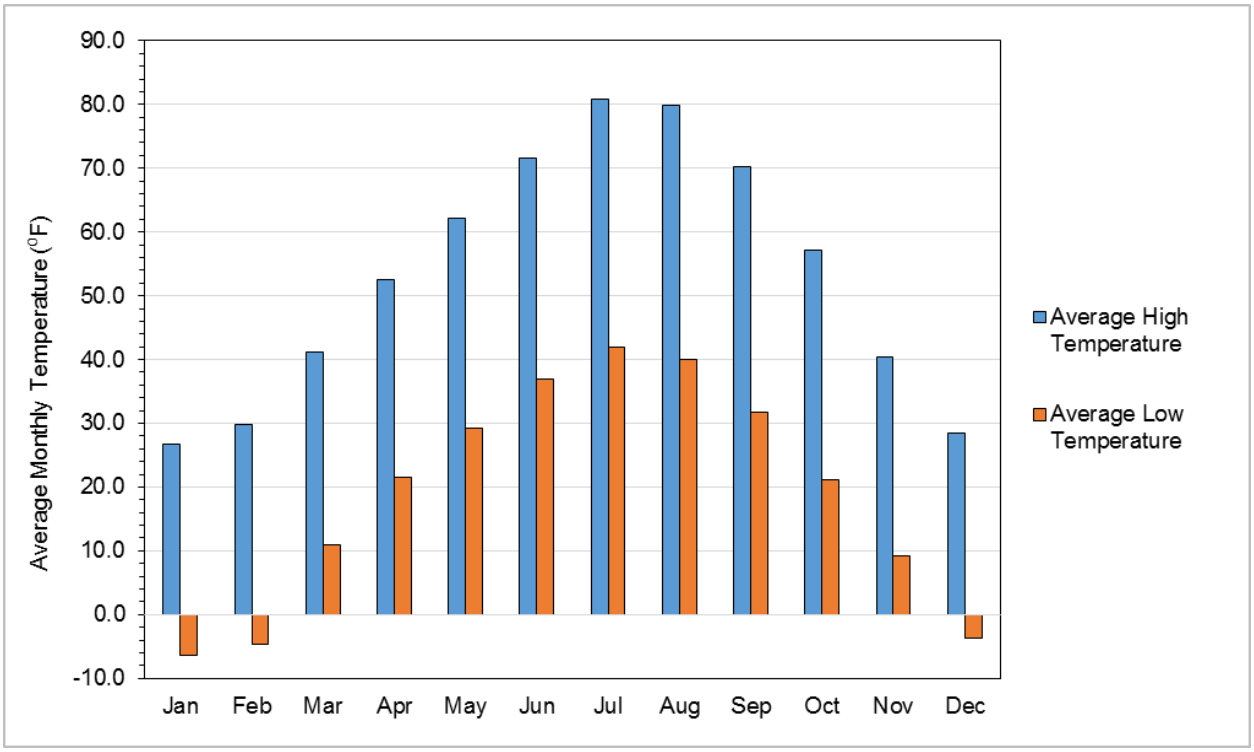

Source: WRCC 2016b

Figure 15. Average temperatures at the Boulder Rearing NWS station, 1989–2016.

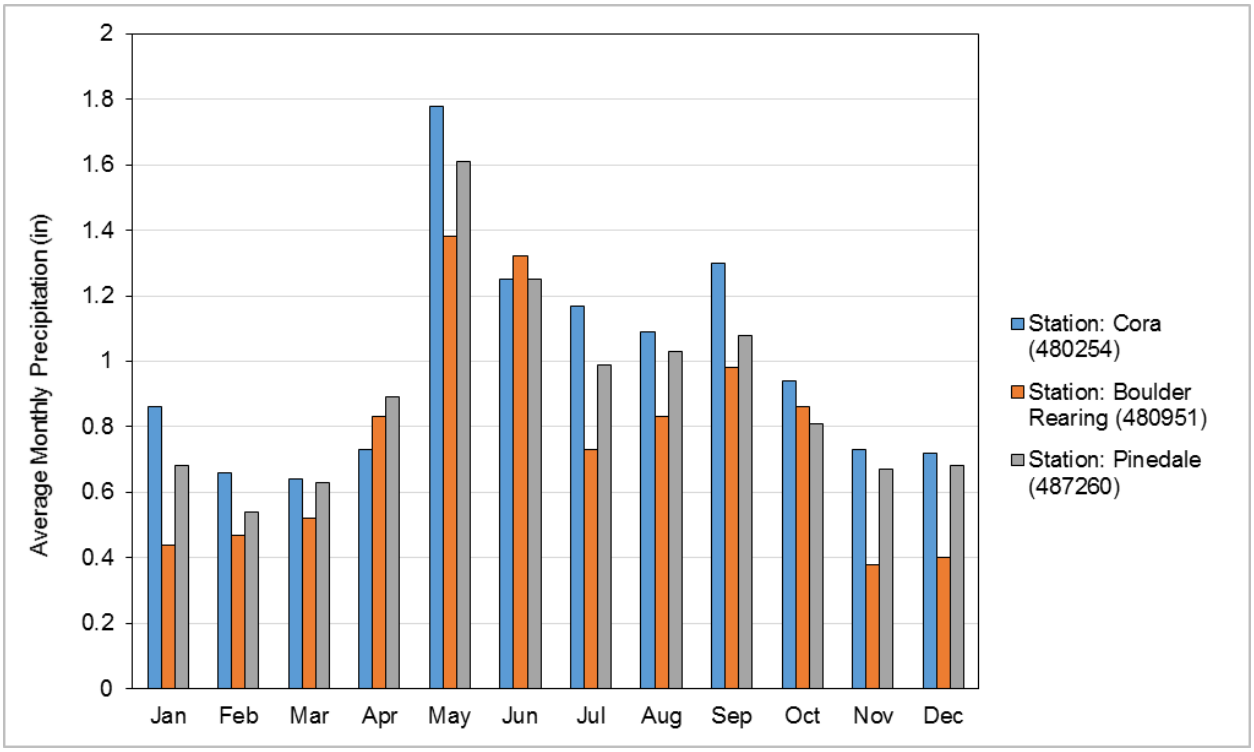

Source: NOAA 2016

Figure 16. Average monthly precipitation at NWS stations within the New Fork River watershed.

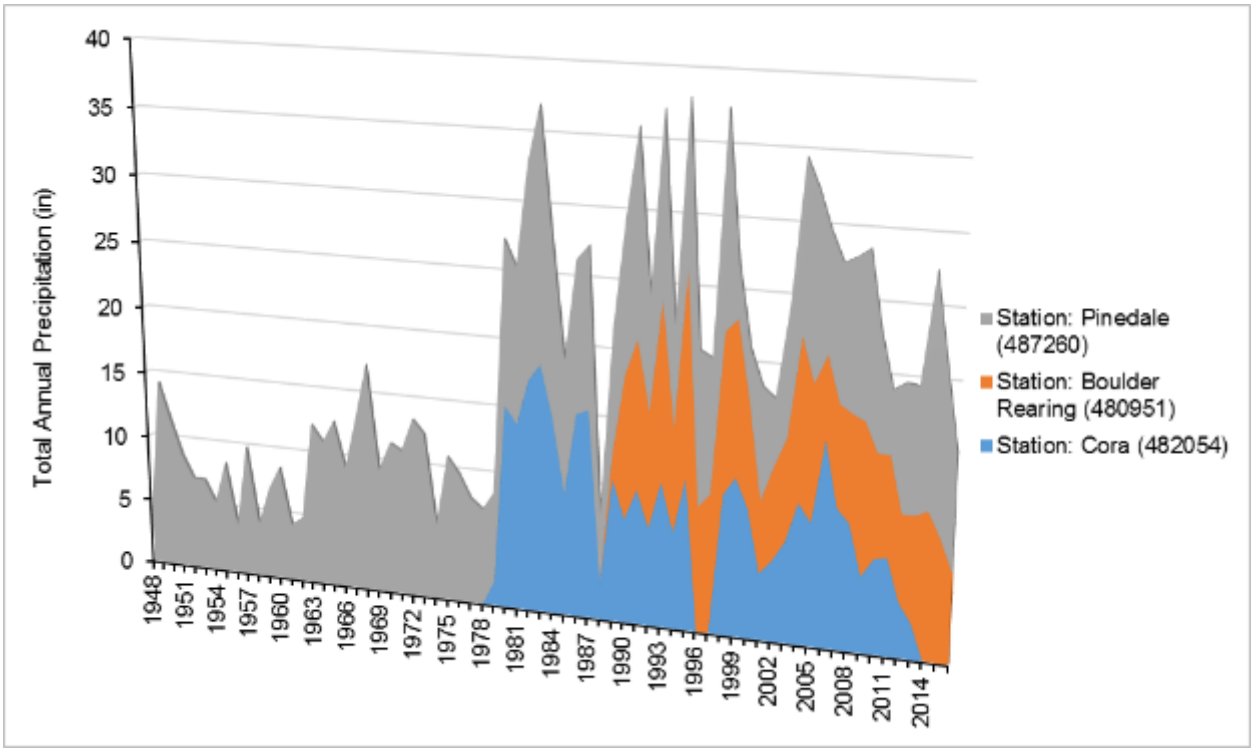

Source: NOAA 2016

Figure 17. Total annual precipitation at NWS stations within the New Fork River watershed.

2.4 Geology and Soils

The New Fork River watershed is within the Middle Rocky Mountain and Wyoming Basin physiographic provinces. The provinces are characterized by basins and rugged mountains (Hunt 1967). The watershed begins in the Middle Rocky Mountain Province on the western flank of the Wind River Range. The Wind River Range is a northwest-trending asymmetric anticline with a Precambrian-age (greater than 540 million years old) core of plutonic rock which has been thrust to the southwest over sedimentary rocks within the Green River Basin (USGS 2006). From the Wind River Range, the watershed flows west into the Green River Basin, a part of the Wyoming Basin Province. The Wyoming Basin Province consists of generally flat-lying unconsolidated deposits of the Quaternary period and Cenozoic to Paleozoic-age sedimentary rocks (less than 485 million years old).

Details and maps regarding structural geology, surficial materials, bedrock geology, potential geologic hazards and impacts to watershed hydrology, and soils are provided in Appendix E – Geology, Aquifers, and Soils Summary.

2.5 Groundwater Hydrology

Aquifers within the Green River Basin are part of the Colorado Plateau's aquifer system and range in age from Cenozoic to Paleozoic (less than 541 million years old) (Whitehead 1996). Within the New Fork River watershed, three primary water-yielding aquifers are present: Quaternary-age (less than 2.6 million years old) unconsolidated deposit aquifers, Lower Tertiary-age (66 to 34 million years old) bedrock aquifers, and Mesozoic-age (252 to 66 million years old) bedrock aquifers. Paleozoic-age (541 to 252 million years old) aquifers are also present within the watershed but are not extensively used because of their depths.

Details and maps regarding the principal aquifers in the watershed, depth to initial groundwater, groundwater recharge, existing wells and springs, and groundwater usage are provided in Appendix E – Geology, Aquifers, and Soils Summary.

2.6 Surface Water Hydrology

This section of the document provides a general description of the hydrology of the New Fork River watershed, followed by analyses of gaged peak flow and flow duration, and a summary of select results from a StateMod model that was developed for the watershed in association with the *New Fork Lake Dam Enlargement, Level II, Phase I Study* (RJH Consultants 2017).

2.6.1 General Description

The New Fork River watershed encompasses approximately 1,230 square miles. The New Fork River itself flows north to south and receives flow from seven major tributaries before converging with the Green River (**Figure 1**). The hydrology follows a snowmelt-dominated regime typical for the region. For the majority of the calendar year, baseflows are minimal in the various river channels (**Figure 18**). Flow levels increase as temperatures rise in mid-April, and peak discharges generally occur in mid-June to early July. In an average year, 80 percent of the total annual volume flows during May, June, and July.

Gaging records for the various sub-basins extend as far back as the early 1900s, although many stations have short or discontinuous records. **Table 6** provides summary information for the 23 historical gages. Ten gages of are of limited use for characterizing the hydrologic condition:

- Seven sites have records of 6 years or less and ceased operation by 1944, which limits the use of the data in discussing current conditions.
- Two sites are for irrigation ditches and do not necessarily describe the natural hydrology of the system.
- One gage was only in operation for 5 months.

The remaining 13 gages, however, can be used to characterize the historical and current hydrologic conditions of the system (**Figure 19**).

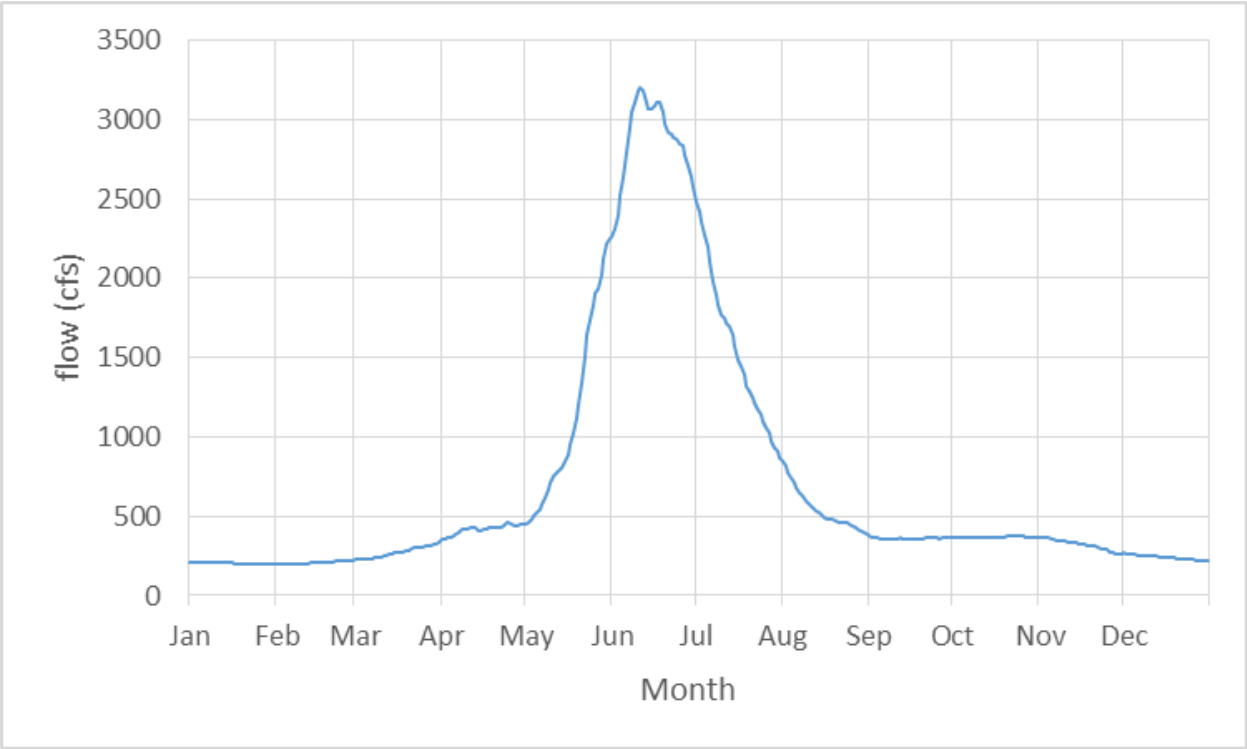

Note: USGS No 09205000 New Fork River Near Big Piney , WY

Figure 18. Typical flow hydrograph shape for rivers in the New Fork River watershed.

Table 6. Summary of USGS stream gage data within the New Fork River Basin study area

GAGE ID	GAGE NAME	BEGIN	END	NO. OF COMP. YEARS[1]	NO. OF INCOMP. YEARS[2]
09192750	New Fork River Above New Fork Lakes, WY	1985	1985	< 1	--
09193000	New Fork River Bel New Fork Lake, Near Cora, WY	1938	2013	38	37
09194500	Willow Creek Near Cora, WY	1938	1941	3	--
09195500	Duck Creek At Cora, WY	1938	1941	3	--
09196000	New Fork River Near Pinedale, WY	1938	1944	6	--
09196500	Pine Creek Above Fremont Lake, WY	1954	Active	61	3
09196940	Fremont Ditch Near Pinedale, WY	1985	1995	10	--
09196960	Highland Ditch Near Pinedale, WY	1985	1995	10	--
09197000	Pine Creek Below Fremont Lake, WY	1910	Active	38	69
09197500	Pine Creek Near Pinedale, WY	1905	1906	1	--
09198000	Pine Creek At Pinedale, WY	1904	1954	40	10
09198500	Pole Cr Bel Little Half Moon Lake, Near Pinedale, WY	1938	1971	33	--
09199000	Pole Creek At Fayette, WY	1904	1906	2	--
09199500	Fall Creek Near Pinedale, WY	1938	1971	33	--
09200000	Fall Creek Near Fayette, WY	1904	1905	1	--
09201000	New Fork River Near Boulder, WY	1914	1969	55	--
09201500	Boulder Creek Above Boulder Lake Near Boulder, WY	1938	1939	1	--
09202000	Boulder Creek Bel Boulder Lake, Near Boulder, WY	1938	1973	35	--
09202500	Boulder Creek Near Boulder, WY	1903	1932	15	14
09203000	East Fork River Near Big Sandy, WY	1938	1992	54	--
09204000	Silver Creek Near Big Sandy, WY	1938	1971	33	--
09204500	East Fork At New Fork, WY	1904	1932	16	12
09205000	New Fork River Near Big Piney, WY	1954	Active	63	--

Notes:
[1] Number of complete years (i.e., records area available for 365 or 366 days per year)
[2] Number of incomplete years, including years without any records.

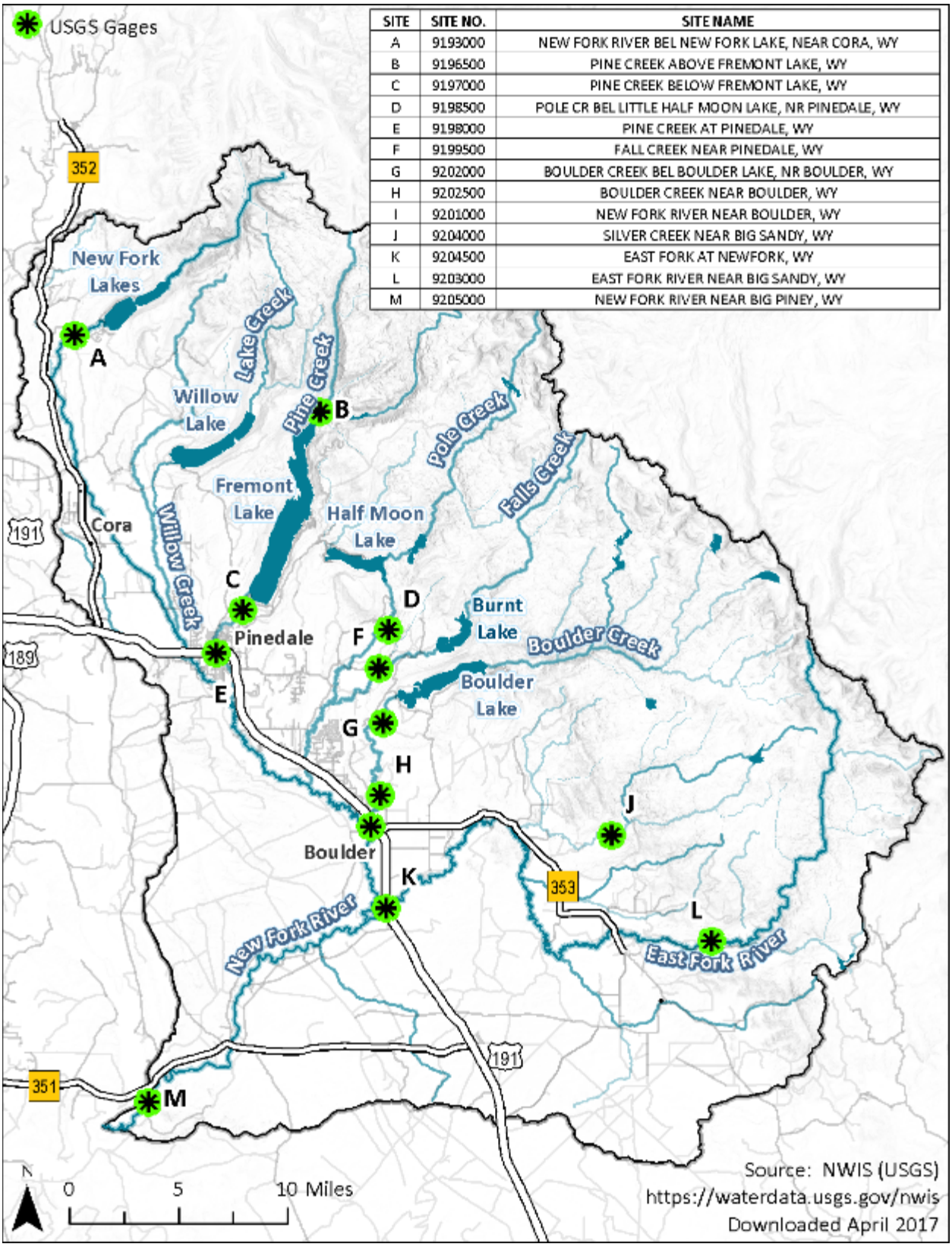

SITE	SITE NO.	SITE NAME
A	9193000	NEW FORK RIVER BEL NEW FORK LAKE, NEAR CORA, WY
B	9196500	PINE CREEK ABOVE FREMONT LAKE, WY
C	9197000	PINE CREEK BELOW FREMONT LAKE, WY
D	9198500	POLE CR BEL LITTLE HALF MOON LAKE, NR PINEDALE, WY
E	9198000	PINE CREEK AT PINEDALE, WY
F	9199500	FALL CREEK NEAR PINEDALE, WY
G	9202000	BOULDER CREEK BEL BOULDER LAKE, NR BOULDER, WY
H	9202500	BOULDER CREEK NEAR BOULDER, WY
I	9201000	NEW FORK RIVER NEAR BOULDER, WY
J	9204000	SILVER CREEK NEAR BIG SANDY, WY
K	9204500	EAST FORK AT NEWFORK, WY
L	9203000	EAST FORK RIVER NEAR BIG SANDY, WY
M	9205000	NEW FORK RIVER NEAR BIG PINEY, WY

Figure 19. USGS continuous flow gages in the New Fork River watershed.

2.6.2 Gaged Peak Flow Analysis

A statistical analysis of instantaneous peak flow data provides insight into the probability that flows of a particular level will occur. The process detailed in Bulletin 17B (USGS 1981) for incorporating regional tendencies and weighting outliers was followed to produce the values summarized in **Table 7**. The 2-year recurrence interval peak flow indicates the flood level that has a 50 percent likelihood of occurring in any given year, and often approximates the bankfull discharge of natural, self-adjusting channels (Dunne and Leopold 1978). The 10-year and 100-year recurrence interval values provide some measure of the year-to-year variability, as well as represent typical thresholds for designing restoration and infrastructure. Additionally, recurrence interval flood values are an important part of the Rosgen Level II stream classification effort discussed in **Section 2.7**. Calculated peak flow values generally, as expected, increase with drainage area for most of the gaged sites. Gages on the East Fork (09203000), Pole Creek (09198500), and Pine Creek (09197000 and 09198000) had lower flood levels than expected, based on the drainage area. Possible explanations might be gaps in the flow record during particularly wet periods, or natural or manmade features in the basin that attenuate the response of the incoming waters. In each case, however, the flow records are long enough that the computed values have a high degree of confidence. Additional figures representing the complete analysis and confidence bands can be found in the Appendix F – Peak Flow Analysis.

Table 7. Peak flow analysis for the New Fork River watershed

GAGE ID	GAGE NAME	DRAINAGE AREA (SQ. MI.)	ELEVATION (FEET, NGVD)	PEAK FLOW (CFS)		
				2-YR RI	10-YR RI	100-YR RI
09198500	Pole Cr Bel Little Half Moon Lake, Near Pinedale, WY	87.50	7,475	931	1,248	1,555
09199500	Fall Creek Near Pinedale, WY	37.20	7,240	421	628	849
09204000	Silver Creek Near Big Sandy, WY	45.43	7,475	698	989	1,285
09202500	Boulder Creek Near Boulder, WY	135.00	6,975	2,059	3,259	4,602
09202000	Boulder Creek Bel Boulder Lake, Near Boulder, WY	130.00	7,180	1,944	2,580	3,191
09204500	East Fork At New Fork, WY	348.00	6,917	2,190	3,300	4,491
09203000	East Fork River Near Big Sandy, WY	79.20	7,700	1,241	1,722	2,201
09198000	Pine Creek At Pinedale, WY	118.00	7,162	1,080	1,806	2,658
09197000	Pine Creek Below Fremont Lake, WY	114.00	7,390	1,027	1,635	2,318
09196500	Pine Creek Above Fremont Lake, WY	75.80	7,450	1,643	2,180	2,696
09205000	New Fork River Near Big Piney, WY	1230.00	6,800	4,769	7,795	11,275
09193000	New Fork River Bel New Fork Lake, Near Cora, WY	36.20	7,700	395	502	601
09201000	New Fork River Near Boulder, WY	552.00	6,960	2,707	4,745	7,233

Note: cfs = cubic foot per second; yr = year; NGVD = National Geodetic Vertical Datum; RI = recurrence interval; sq. mi. = square miles.

2.6.3 Gaged Flow Duration Analysis

The cumulative flow record of mean daily flows for a given gage can be organized to indicate how long the flows of a given level would be expected to occur in the channel. The *average mean daily flow* provides a sense of the relative size of annual flow volume for the measured stream. The *percent exceedance probability* is the percent of time that the flow is higher than a particular discharge. It is calculated according the formula

$$P = 100 * (m/(n+1))$$

Where,

P is the exceedance probability
n is the total number of flows
m is the rank of the flows where 1 is the rank of the largest flow and n is the rank of the smallest flows

Table 8 presents the results for the 90 percent, 50 percent, and 10 percent exceedance flows.

- **90 percent exceedance flow:** indicates that flow is expected to be higher than this level 90 percent of the time, and generally describes the baseflow condition of the river.
- **10 percent exceedance flow:** represents the level expected to be exceeded for about 6 weeks during the year, and provides an indication of what sustained high flows are experienced in the channel.
- **50 percent exceedance, or median, flow:** can be compared with the average mean daily flow to provide an indication of how flow in the channel varies throughout the year.

The great difference between the high and low flow levels in a natural, snowmelt-driven system leads to *average mean daily flows* that are many factors larger than the median flows. The relative difference between average and median flows then is expected to decrease as tributaries converge into larger basins and flow regulation occurs. Additional flow duration results are presented in Appendix G – Flow Duration Analysis.

Table 8. Mean daily flow and percent exceedance flows for New Fork River watershed

GAGE ID	GAGE NAME	AVERAGE MEAN DAILY FLOW (CFS)	90% EXCEEDANCE (CFS)	50% EXCEEDANCE (CFS)	10% EXCEEDANCE (CFS)
09198500	Pole Cr Bel Little Half Moon Lake, Near Pinedale, WY	108	8	25	367
09199500	Fall Creek Near Pinedale, WY	39	1	7	143
09204000	Silver Creek Near Big Sandy, WY	43	0	4	134
09202500	Boulder Creek Near Boulder, WY	134	7	25	457
09202000	Boulder Creek Bel Boulder Lake, Near Boulder, WY	190	4	40	625
09204500	East Fork At New Fork, WY	143	32	55	400
09203000	East Fork River Near Big Sandy, WY	103	6	17	335
09198000	Pine Creek At Pinedale, WY	131	13	36	414
09197000	Pine Creek Below Fremont Lake, WY	167	21	52	468
09196500	Pine Creek Above Fremont Lake, WY	170	14	41	551
09205000	New Fork River Near Big Piney, WY	703	190	329	1,732
09193000	New Fork River Bel New Fork Lake, Near Cora, WY	50	2	9	253
09201000	New Fork River Near Boulder, WY	386	85	157	1,073

2.6.4 Estimated Monthly, Annual, and Peak Discharge

Wenck Associates (Wenck) developed the surface water allocation model, StateMod, for the New Fork River watershed as part of the *New Fork Lake Dam Enlargement, Level II, Phase I Study* (RJH Consultants 2017). The model results are not repeated herein and the reader is referred to RJH Consultants (2017) for additional information. However, the StateMod stream discharge data was processed into (1) stream discharge volumes for wet, normal and dry years and (2) average annual and peak discharge volumes for each of the HUC-12 (i.e., a 12-digit hydrologic unit code) subwatersheds in the New Fork watershed to provide summary results.

An analysis of the USGS natural flow stream gauge on Pine Creek above Fremont Lake (09196500) was completed to determine representative wet/normal/dry years during the StateMod modeled analysis period, which extended from 1981 through 2014. The total annual calendar year discharge (acre-feet) measured by the stream gauge was ranked largest to smallest. The 20 percent wettest and driest years were determined from the ranking, which resulted in identification of the seven wettest and driest years. The remaining years were considered normal years. Monthly and annual discharge volume was averaged for each wet, normal, and dry year, respectively, to determine the average wet/normal/dry year discharge volume. Annual stream discharge for wet, normal and dry years is shown in **Figure 20**.

Average annual and peak monthly average discharge volumes are shown for each of the HUC-12 subwatersheds in **Figure 21** and **Figure 22**, respectively. The HUC-12 values reported represent the simulated stream discharge at the furthest-downstream point in each HUC-12 watershed. The data is a simulation that assumes current conditions were effective through the modeling period and is representative of the effects of humans (e.g., irrigation diversions and return flows, reservoir storage, and other uses of water). The data is not the incremental natural discharge from a single HUC-12 watershed. Several of the HUC-12 watersheds are high-altitude HUCs and are above all StateMod model nodes. No data were reported in these cases. Furthermore, several HUC-12 watersheds in the lower basin are intermittent streams that are assumed to not contribute inflow to the StateMod model; therefore, no data were reported in these cases.

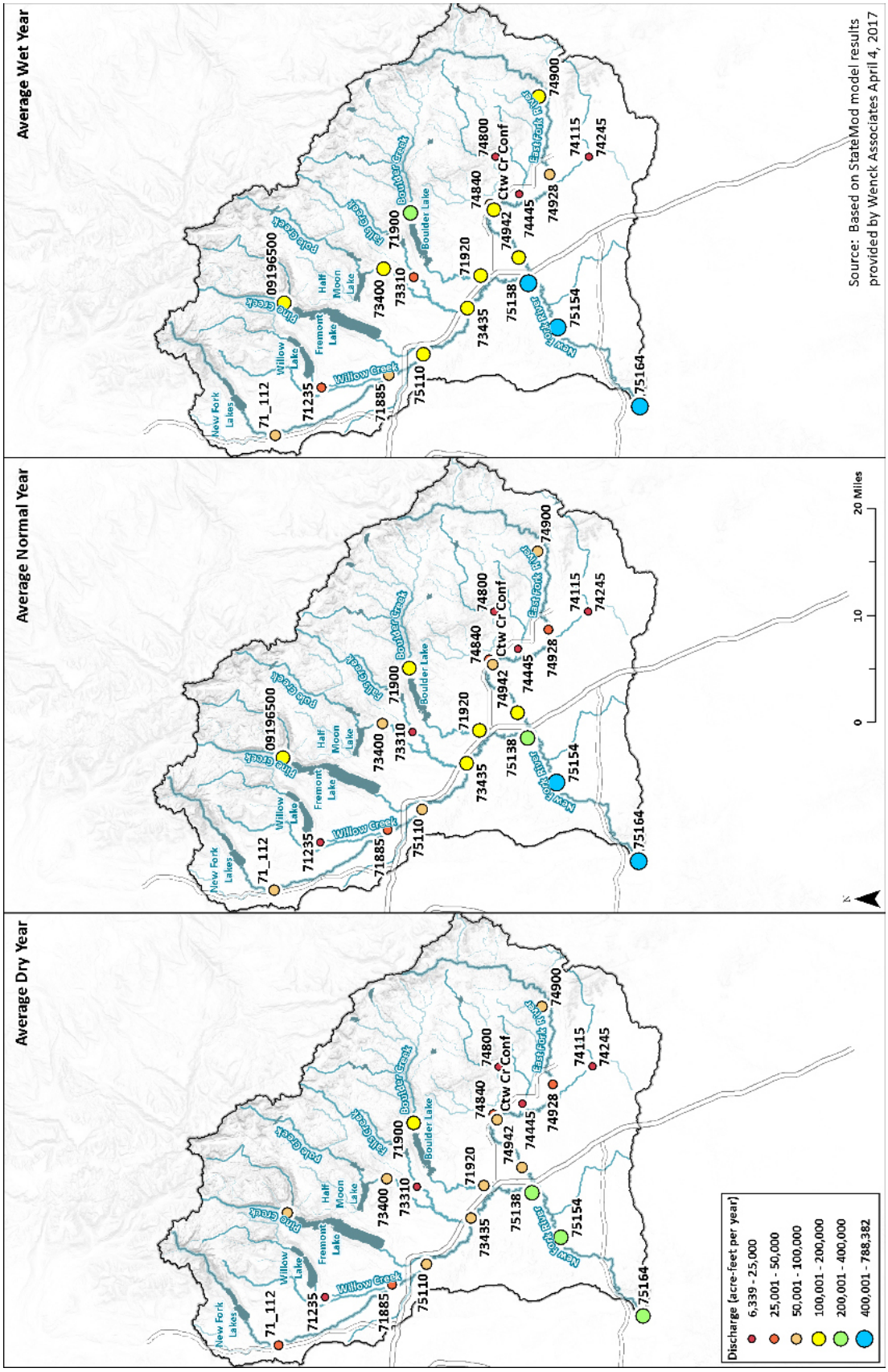

Figure 20. Annual stream discharge volumes for wet, normal and dry years.

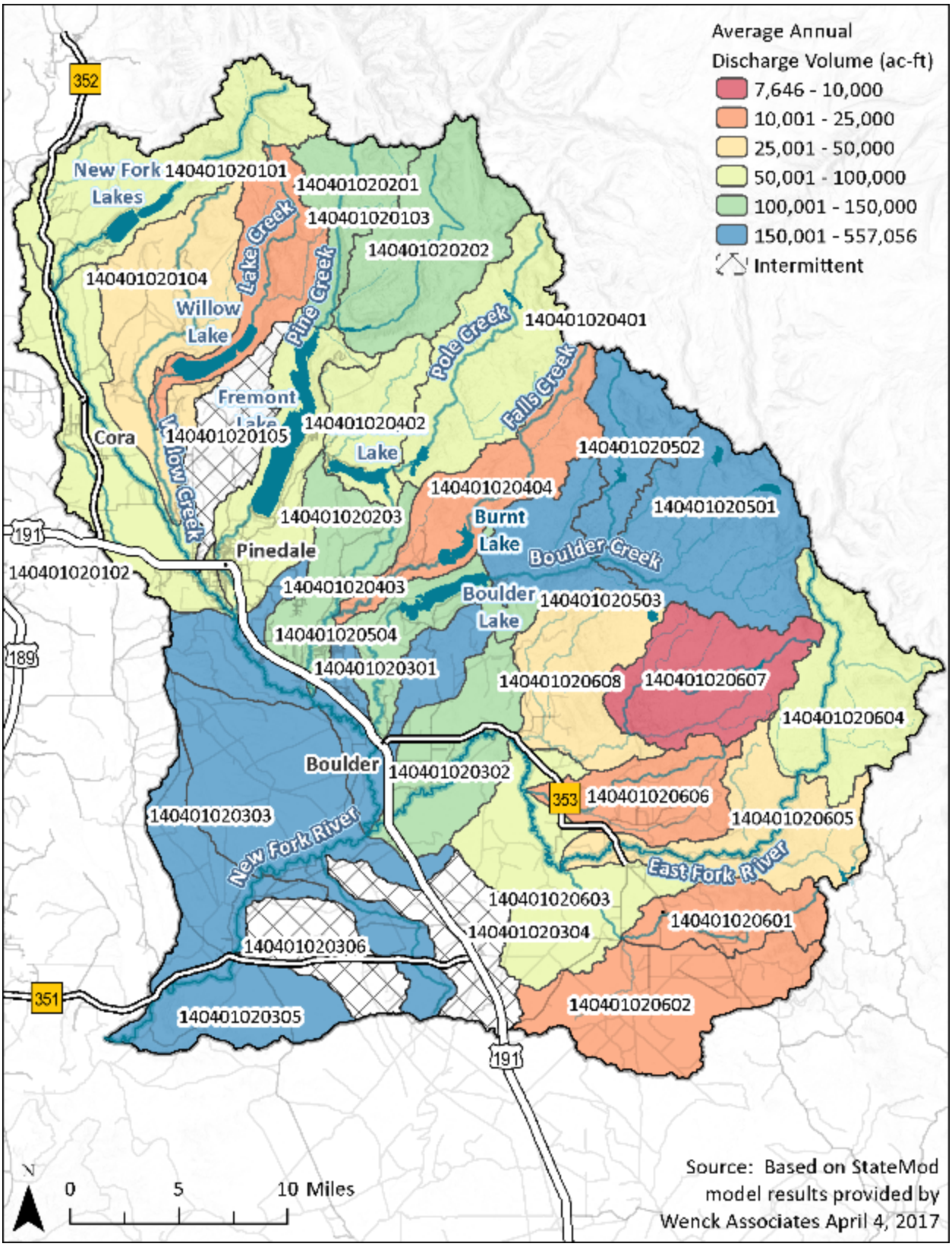

Figure 21. Average annual discharge volume by HUC-12 (cumulative).

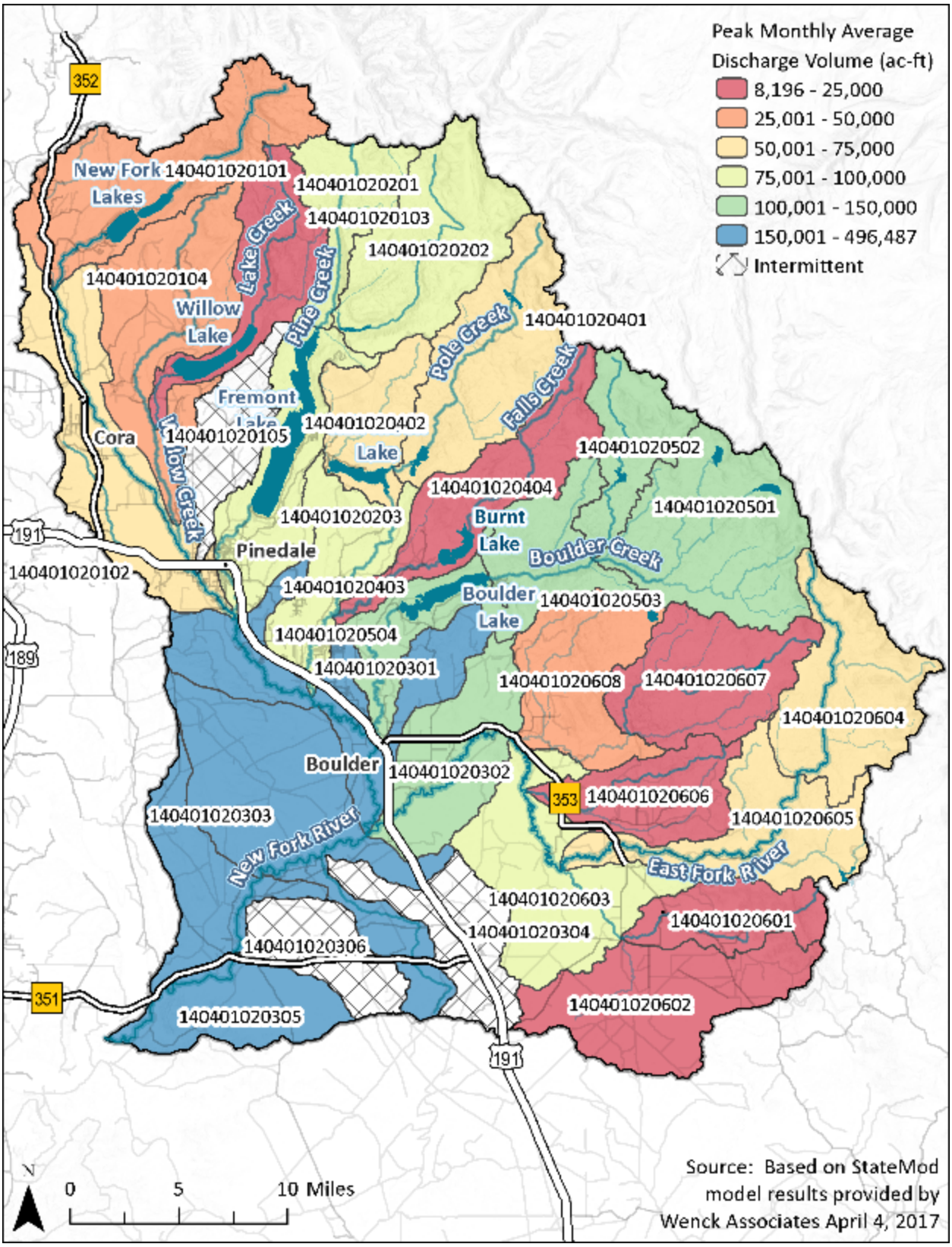

Figure 22. Peak monthly average discharge by HUC-12 (cumulative).

2.7 Fluvial Geomorphology

A Level I Stream Classification was performed on the eight major rivers and streams in the basin (i.e., New Fork and East Fork rivers, and Boulder, Pole, Fall, Lake, Pine, and Willow creeks). The Level I classification integrates broad-scale topography, geologic data, and aerial photography, and organizes the watershed into general stream types (Rosgen and Silvey 1996). These stream types, labeled A through G, are designed to convey high-level information about the watershed in general and potentially identify high-priority areas for further examination (**Figure 23**).

The Level I classification is generally a desktop-based study (i.e., does not include field-based surveys) and relies on characteristics that can be discerned from general mapping information, such as sinuosity, channel slope, and width. As more detailed information is gained from ground surveys conducted during subsequent classification efforts (Level II, Level III, etc.), the original stream types could be revised.

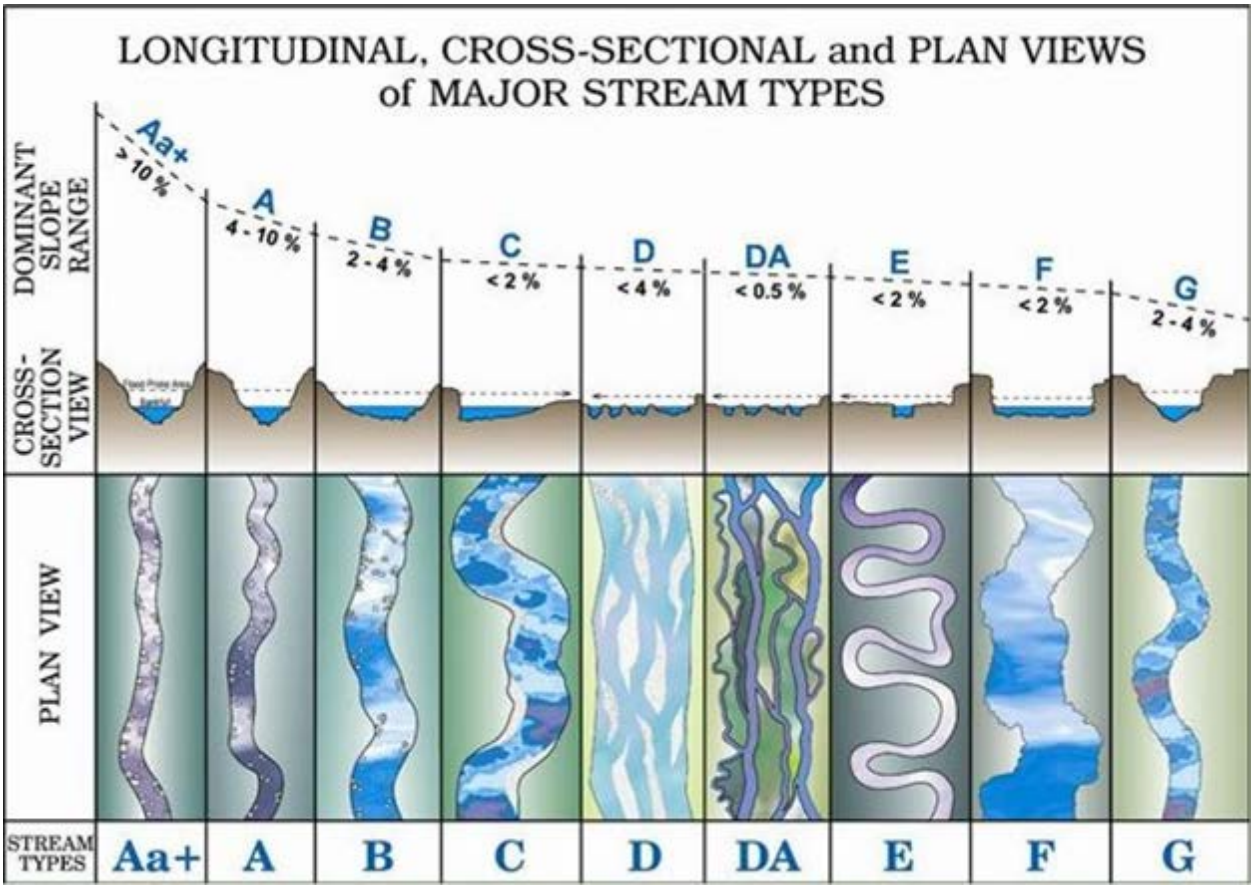

Source: Rosgen and Silvey 1996

Figure 23. Broad level stream classification delineation showing longitudinal, cross-sectional and plan-views of major stream types.

Classification was carried out from the mouth of each stream at the downstream end to the outlet of the lake on the upstream end. For two of the streams, Willow Creek and East Fork River, no such lake exists; therefore, each was classified to the point in the headwaters where the stream order was calculated to be approximately Strahler Stream Order 7 (SO-7) (see Appendix G – Flow Duration Analysis). Along each stream, sub-reaches were delineated based on changes in slope, sinuosity, channel and meander width, and structural controls. Streamlines were laid out based on the digital topographic data, and in some cases

do not match the aerial photography. The general effect is that calculated slopes could be slightly steeper and calculated sinuosity could be lower than a field survey concludes. Additionally, reasonable channel depths were not possible to obtain from the available 10-meter resolution topographic data, which eliminated the ability to assess any entrenchment ratios. These limitations of the data are not expected to have a significant impact on this Level I classification.

A total of about 192 miles of stream channel was classified according to the Rosgen method (**Figure 24**). Stream type was assigned based on the dominant characteristics of each type. Because these characteristics exist on a spectrum, some sub-reaches could exhibit characteristics of more than one stream type. Information from future detailed surveys might result in a reclassification of a particular sub-reach. Similarly, each stream type is associated with generalized trends relating to aggradation/degradation, bank stability, planform movement, channel structure, and sediment transport efficiency (Rosgen and Silvey 1996). That is not to say that all sub-reaches classified as the same type will share all of the same trends. Additional factors not accounted for in the initial classification could prove to be the dominant driver of stream behavior. The primary benefit of the Level I classification effort is to present a high-level inventory of watershed-scale characteristics and to set priorities for more detailed assessments in the future.

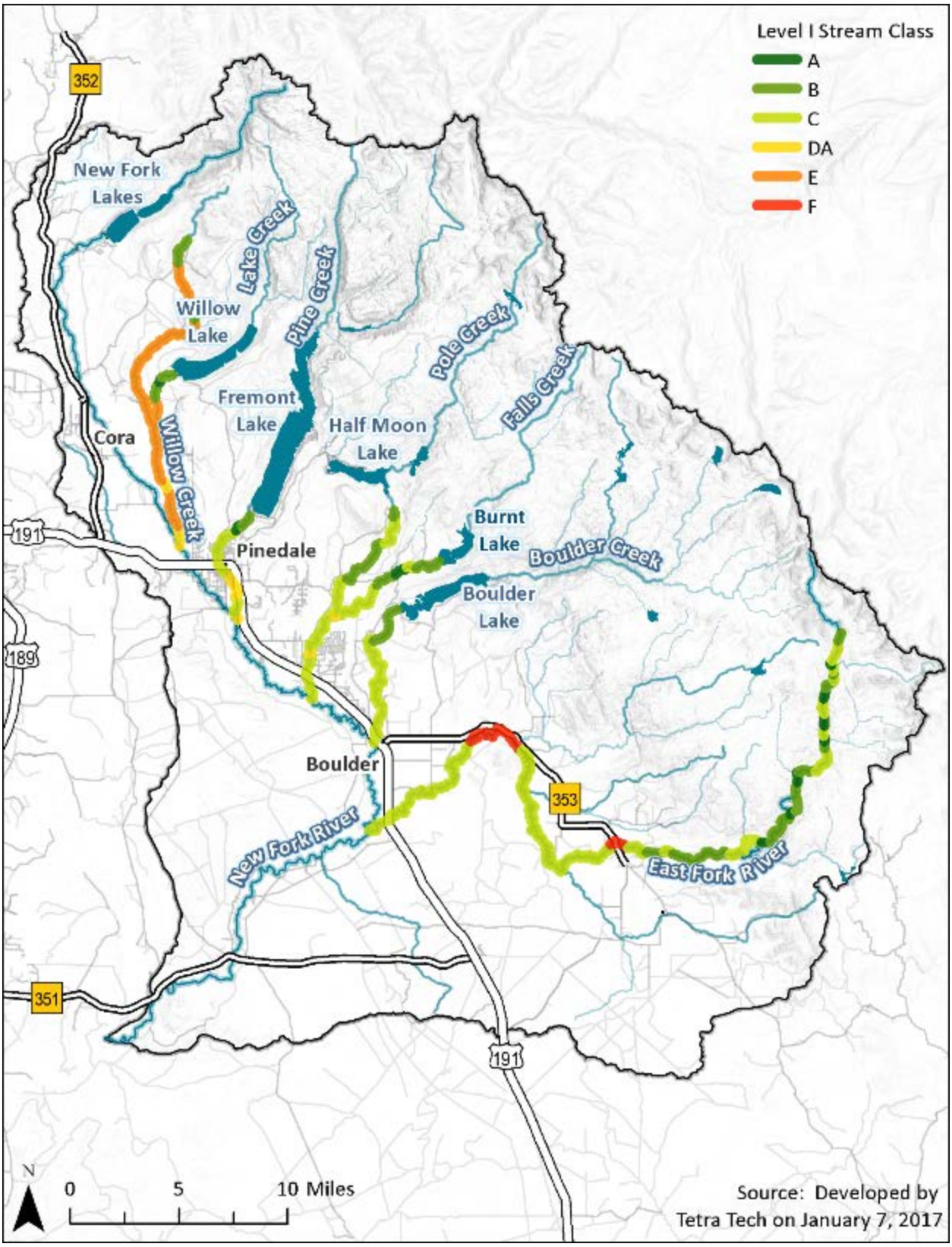

Figure 24. Layout of Level I stream type classification within the New Fork River watershed.

A summary of the classification results is presented in **Table 9**. Approximately 45 percent of the classified area is Type C, generally considered to be meandering channels with regular riffle/pool sequences, active point bars and regular floodplain connectivity. About 23 percent of the classified area is Type E or F, which describe meandering channels that are entrenched in their planform; these potentially evolved in response to some change in the local hydrologic or sediment regime. About 14 percent of the evaluated stream length was classified as Type A or B, which primarily occur in the confined valleys of the upper watershed. Detailed descriptions of the stream type delineation for each classified stream are included in Appendix H – Stream Classification.

Table 9. Summary of Rosgen stream type coverage and general characteristics

STREAM TYPE	PERCENT COVERED	DESCRIPTION
A	2%	Steep, step/pool system, generally confined to narrow valleys with bedrock controls that limit planform change over time.
B	12%	Generally a transition zone from steep confined zones to open, meandering channels. Channel changes are expected only during large-flow events.
C	45%	Well-formed, meandering channel that may move laterally overtime. Generally expected to be in balance with long-term trends in flow and sediment supply that is, in part, maintained by floodplain connectivity. Instability can be introduced by changes to hydrologic or sediment regime.
DA	8%	Multi-thread system with well-formed and vegetated islands throughout. Avulsions between channels may occur, but lateral migration is expected to be low.
E	16%	Highly meandering, entrenched planform. Some flooding of the overbanks is expected. Generally considered the stable result of an adjustment to change in the hydrologic or sediment regime.
F	17%	Meandering and incised channel generally disconnected from the larger floodplain.

2.8 Water Quality

Water quality and water quantity are generally linked; both must be considered in any analysis of watershed function. The purpose of this section of the document is to generally describe water quality in the study area, focusing on suitability for use and constraints that could be imposed by impairments or other issues.

2.8.1 Stream Classifications

With two exceptions, all waters within the New Fork River watershed are classified 2AB (WDEQ 2013). Fremont Lake, the public water supply for the City of Pinedale, and all waters within the Wind River Wilderness are Class 1 waters. Sand Springs Draw is classified as 3B. Definitions are provided below:

> **Class 2AB** waters are those known to support game fish populations or spawning and nursery areas at least seasonally and all their perennial tributaries and adjacent wetlands and where a game fishery and drinking water use is otherwise attainable. Class 2AB waters include all permanent and seasonal game fisheries and can be either “cold water” or “warm water” depending upon the predominance of cold water or warm water species present. All Class 2AB waters are designated as cold water game fisheries unless identified as a warm water game fishery by a “ww” notation in the Wyoming Surface Water Classification List. Unless it is shown otherwise, these waters are presumed to have sufficient water quality and quantity to support

drinking water supplies and are protected for that use. Class 2AB waters are also protected for nongame fisheries, fish consumption, aquatic life other than fish, recreation, wildlife, industry, agriculture, and scenic value uses.

Class 1, Outstanding Waters. Class 1 waters are those surface waters in which no further water quality degradation by point source discharges other than from dams will be allowed. Nonpoint sources of pollution shall be controlled through implementation of appropriate best management practices. Pursuant to Section 7 of these regulations, the water quality and physical and biological integrity which existed on the water at the time of designation will be maintained and protected. In designating Class 1 waters, the Environmental Quality Council (council) shall consider water quality, aesthetic, scenic, recreational, ecological, agricultural, botanical, zoological, municipal, industrial, historical, geological, cultural, archaeological, fish and wildlife, the presence of significant quantities of developable water, and other values of present and future benefit to the people.

Class 3, Aquatic Life Other than Fish. Class 3 waters are waters, other than those designated as Class 1, that are intermittent, ephemeral or isolated waters, and because of natural habitat conditions, do not support nor have the potential to support fish populations or spawning, or certain perennial waters which lack the natural water quality to support fish (e.g., geothermal areas). Class 3 waters provide support for invertebrates, amphibians, or other flora and fauna that inhabit waters of the state at some stage of their life cycles. Uses designated on Class 3 waters include aquatic life other than fish, recreation, wildlife, industry, agriculture, and scenic value. Generally, waters suitable for this classification have wetland characteristics; these characteristics will be a primary indicator used in identifying Class 3 waters.

2.8.2 Waters Requiring TMDLs

All of the waters that have been assessed in the New Fork River watershed by Wyoming Department of Environmental Quality (WDEQ) under the authorities of Sections 305(b) and 303(d) of the Clean Water Act are fully supporting all of their beneficial uses (**Figure 25**) (WDEQ 2014a). There are no 303(d)-listed impaired waterbodies within the New Fork River watershed.

2.8.3 Suitability for Agricultural and Wildlife Use

The Sublette County Conservation District has been monitoring water quality in rivers and streams within the New Fork River watershed since 2000. Monitoring locations are shown in **Figure 26**. A summary of the data for those parameters that have relevance to agricultural or wildlife use (i.e., water supply for irrigation or livestock/wildlife water) is provided in Appendix I – Water Quality.

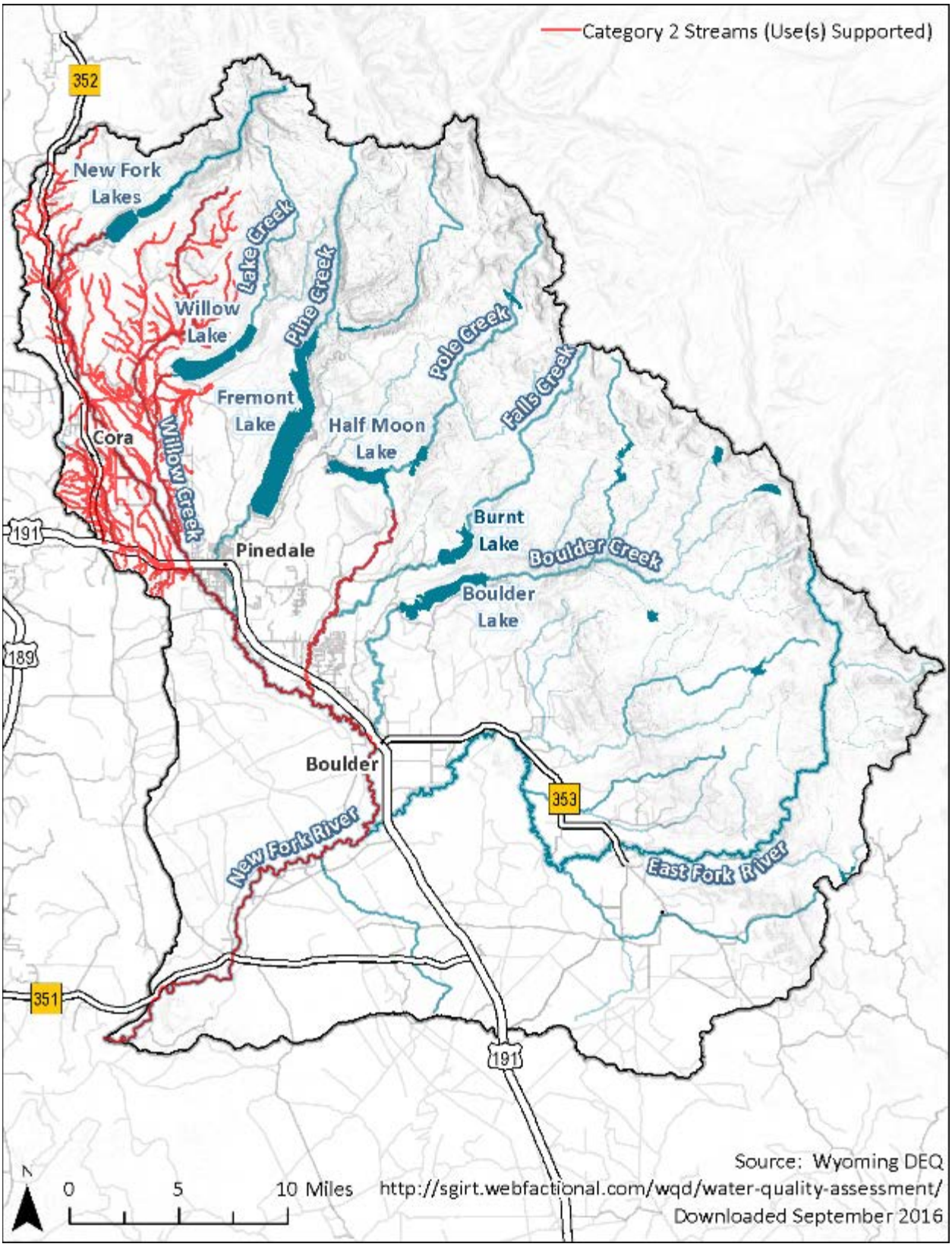

Figure 25. Waters assessed by WDEQ and statuses reported in 2014.

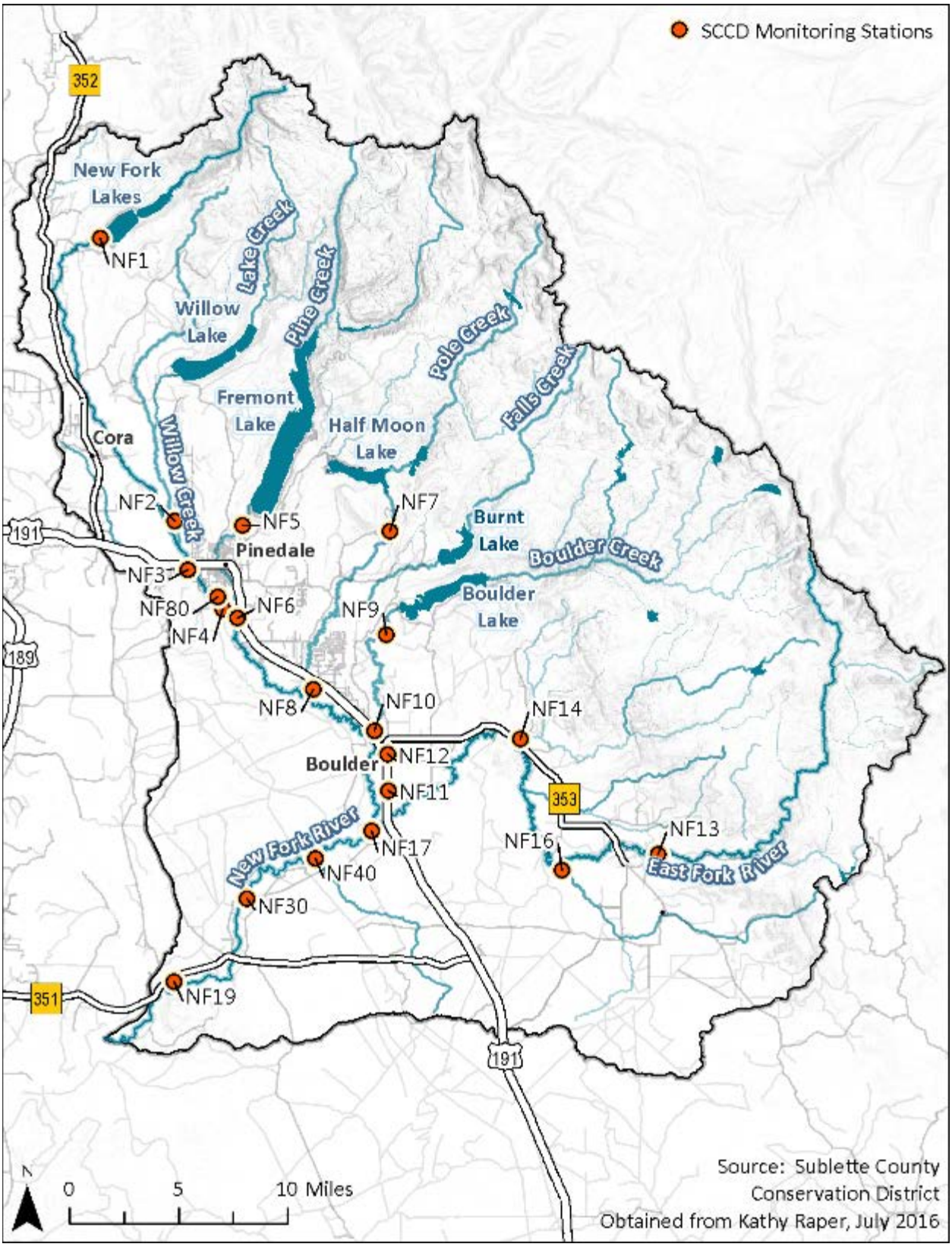

Figure 26. Sublette County Conservation District water quality monitoring locations.

2.8.4 Permitted Discharges

There are three permitted wastewater dischargers in the New Fork River watershed (personal communication, Leah Coleman, WYPDES Permitting Supervisor, Wyoming Department of Environmental Quality, October 21, 2016):

- City of Pinedale (Permit WY0020656)
- WGFD's Boulder Rearing Station (Permit WY0000094)
- Anticline Disposal, LLC (Permit WY0054224).

The city of Pinedale operates an integrated lagoon system to treat municipal wastewater prior to discharge to Pine Creek (**Figure 27**). The maximum design discharge for this facility is 1.5 million gallons per day. WDEQ established effluent discharge limits for *Escherichia coli*, total residual chlorine, total ammonia, biochemical oxygen demand, total suspended solids, and pH (WDEQ 2011).

WGFD operates the Boulder Rearing Station located in Sublette County, Wyoming. The facility is designed to ensure a constant flow of water through a series of raceways and ponds. After the water has flowed through the raceways, it is discharged to the East Fork New Fork River (**Figure 27**). The permit establishes effluent limitations on total suspended solids (WDEQ 2012).

The Anticline Disposal, LLC, facility discharges treated production water from oil production units to two outfalls; one outfall to the New Fork River and one outfall to Sand Draw (**Figure 27**). The permit establishes discharge limits for chloride, oil and grease, pH, specific conductance, sulfate, and total suspended solids (WDEQ 2014b).

2.9 Vegetation and Ecological Communities

The New Fork River watershed spans two Major Land Resource Areas (MLRA): the Central Rocky Mountains and the Cool Central Desertic Basins and Plateaus (NRCS 2016). Plant communities present in the watershed reflect the unique soils, geology, and climate in these two MLRAs (**Figure 28**).

The Central Rocky Mountains area along the eastern and mountainous portion of the watershed generally supports coniferous forests. Forests of lodgepole pine, Douglas fir, subalpine fir, and spruce are common. Alpine grasses, forbs, shrubs, and scattered stands of subalpine fir, spruce, and whitebark pine occur at high elevations (NRCS 2016). The Cool Central Desertic Basins and Plateaus area is predominantly characterized by sagebrush steppe. The representative vegetation includes Wyoming big sagebrush, early sagebrush, antelope bitterbrush, bluebunch wheatgrass, western wheatgrass, prairie junegrass, needleandthread, and Indian ricegrass. Cottonwood and willows grow in riparian zones along the major perennial streams and rivers.

Data obtained from the Landscape Fire and Resource Management Planning Tools Project (LANDFIRE) dataset shows a similar spatial distribution of vegetation, with primarily conifers in the eastern mountains and shrublands in the lower elevation portions of the watershed to the west (**Figure 29**). Shrublands are the most common vegetation class in the watershed, followed by conifer forests, sparsely vegetated areas, and agriculture (primarily annual graminoids/hay) (**Figure 30**).

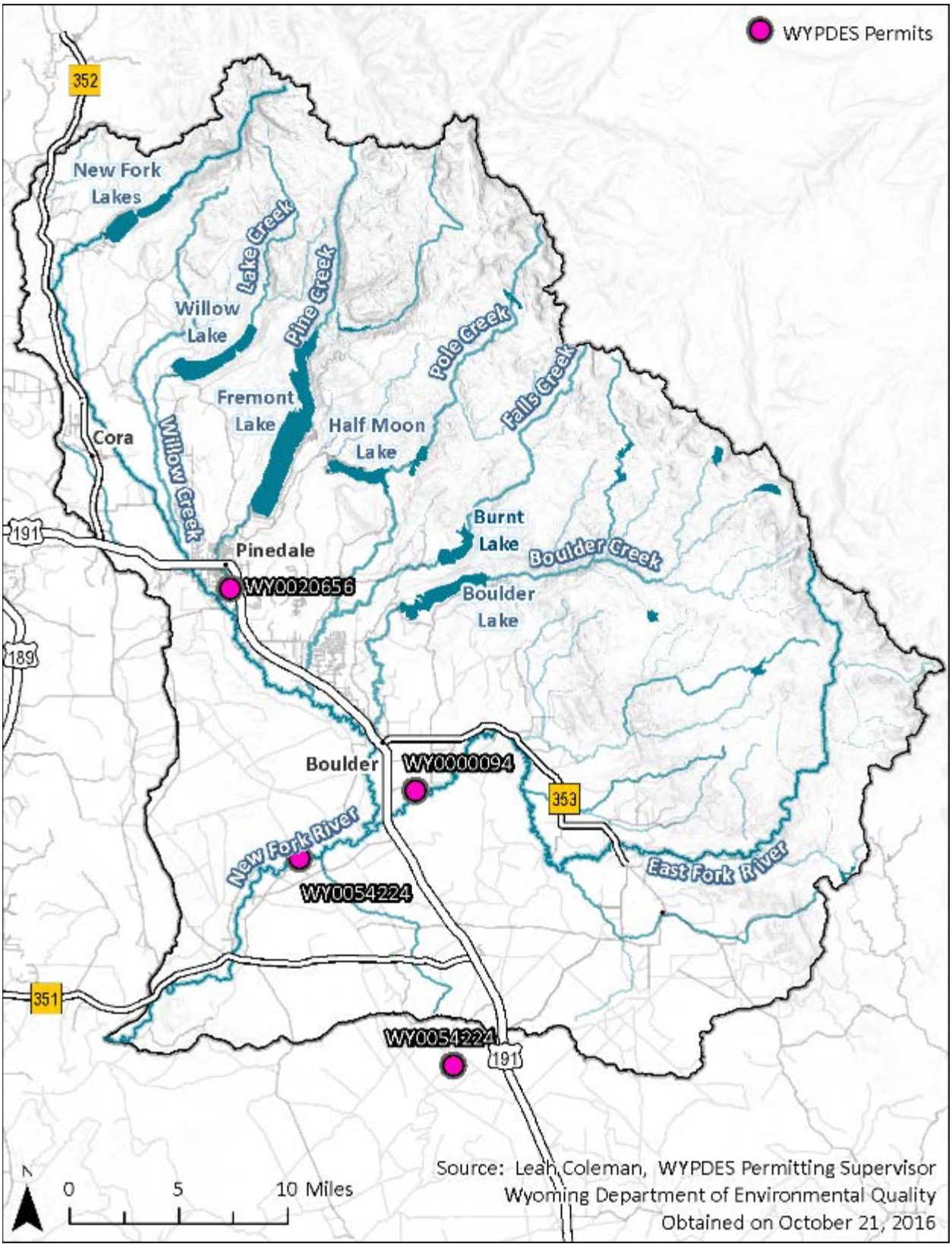

Figure 27. Dischargers permitted by WDEQ.

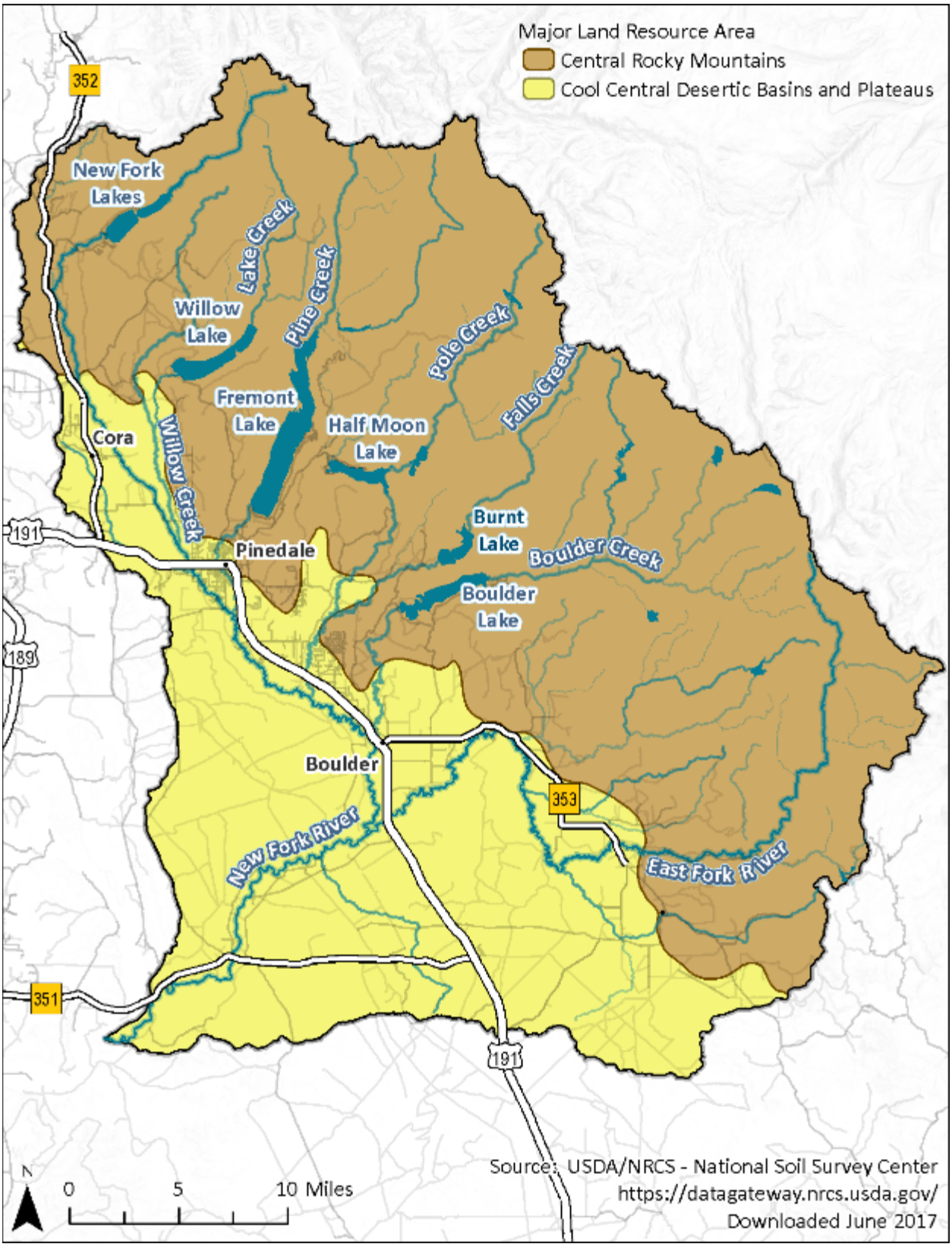

Figure 28. MLRAs in the New Fork River watershed.

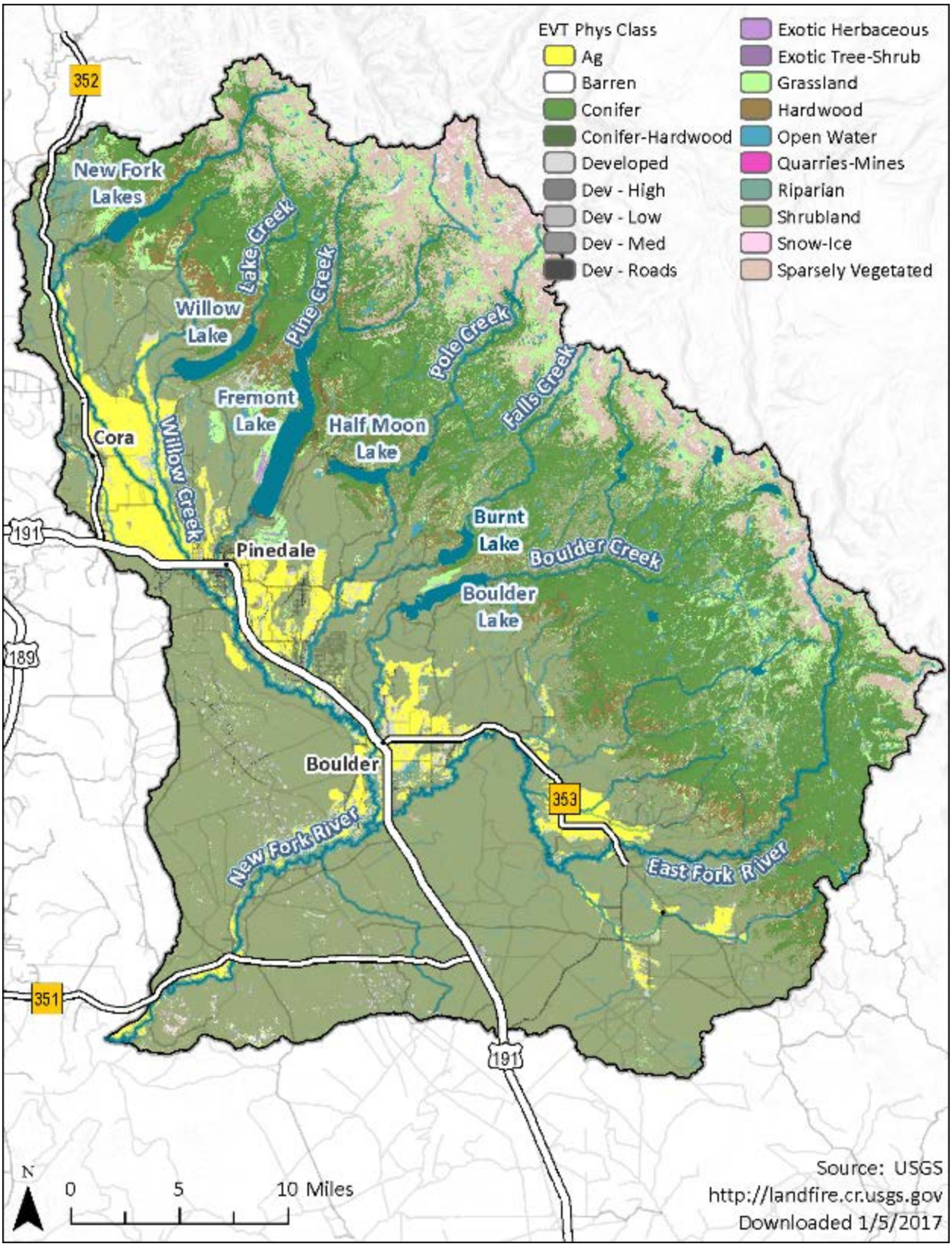

Figure 29. LANDFIRE vegetation classes.

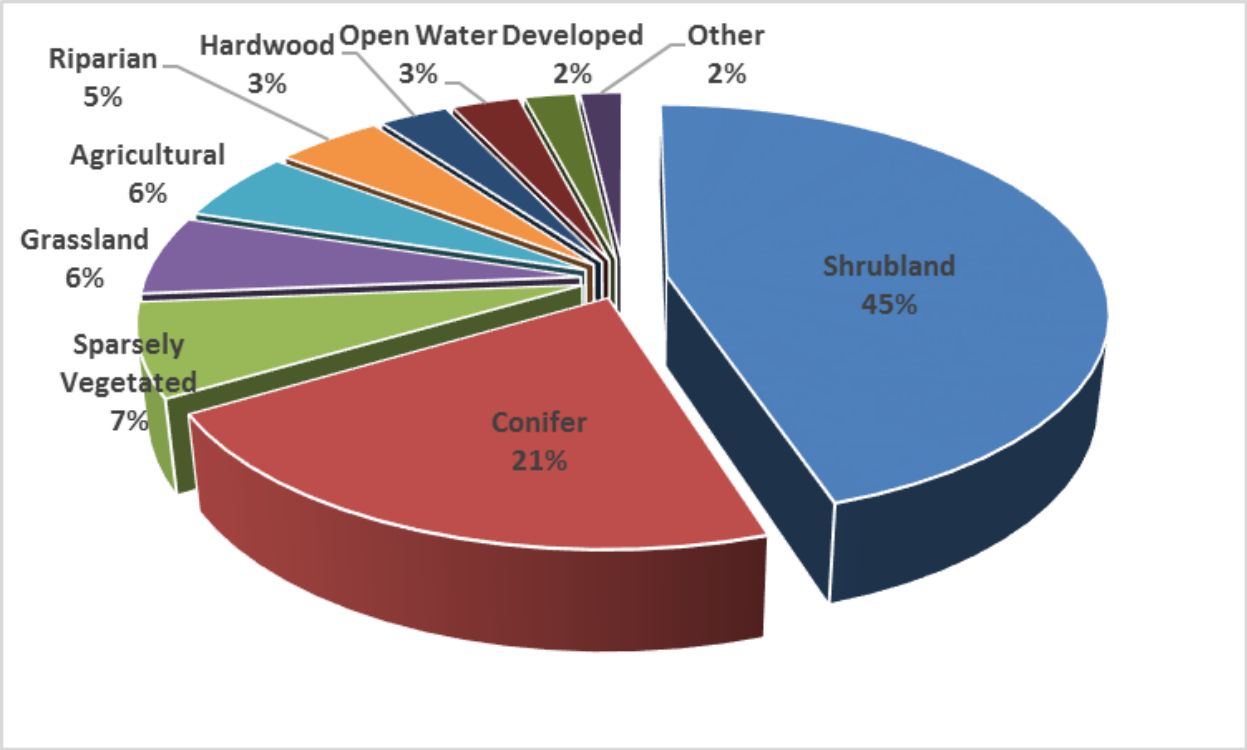

Source: LANDFIRE 2017

Figure 30. Common vegetation classes in the New Fork River watershed.

2.9.1 Ecological Site Descriptions

The NRCS (2011) defines Ecological Sites as "A distinctive kind of land with specific soil and physical characteristics that differs from other kinds of land in its ability to produce distinctive kinds and amounts of vegetation, and in its ability to respond similarly to management actions and natural disturbances." Information about individual ecological sites is compiled into an ecological site description (ESD) report, which is used to classify a landscape based on the interaction between soils, vegetation, and land management. Information included in each ESD is categorized into the following sections:

- **Site Characteristics** - Identifies the site and describes the physiographic, climate, soil, and water features associated with the site.
- **Plant Communities** - Describes the ecological dynamics and the common plant communities comprising the various vegetation states of the site. The disturbances that cause a shift from one state to another are also described.
- **Site Interpretations** - Interpretive information pertinent to the use and management of the site and its related resources.
- **Supporting Information** - Provides information on the sources of information and data used in developing the site description and the relationship of the site to other ecological sites.

The reports provide a wealth of site-specific ecological information and can be used to predict plant community composition and guide management decisions. ESD reports can be obtained through the following website (https://esis.sc.egov.usda.gov/Welcome/pgReportLocation.aspx?type=ESD). However, no data are available for the majority (about 82 percent) of the New Fork River watershed (**Table 10** and **Figure 31**). Of the area that has been mapped, *Loamy* (Foothills and Basins West), *Coarse Upland*

(Foothills and Mountains West), and *Sands* (Foothills and Basins West) are the most common NRCS Ecological Sites. Descriptions are provided in Appendix J – Ecological Site Descriptions.

Table 10. NRCS Ecological Sites in the New Fork River watershed

ECOLOGICAL SITE NAME	AREA	PERCENT
No Data	758,827	84%
Loamy (Foothills And Basins West)	60,903	7%
Coarse Upland (Foothills And Mountains West)	30,753	3%
Sands (Foothills And Basins West)	14,480	2%
Sandy (Foothills And Basins West)	8,471	1%
Loamy (Foothills And Mountains West)	4,986	1%
Shallow Clayey (Foothills And Mountains West)	4,596	1%
Gravelly (Foothills And Basins West)	4,059	1%
Saline Upland (Foothills And Basins West)	3,394	<1%
Saline Lowland (Foothills And Basins West)	2,731	<1%
Shallow Loamy (Foothills And Basins West)	2,593	<1%
Subirrigated (Foothills And Mountains West)	2,166	<1%
Gravelly (Green River - Great Divide Basins)	2,038	<1%
Saline Subirrigated (Foothills And Basins West)	1,994	<1%
Wetland (Foothills And Mountains West)	1,812	<1%
Shallow Loamy, Calcareous (Foothills And Basins West)	979	<1%
Lowland (Foothills And Basins West)	542	<1%
Overflow (High Mountains)	150	<1%
Wetland (High Mountains)	75	<1%
Saline Lowland, Drained (Foothills And Basins West)	35	<1%
Populus tremuloides/Symphoricarpos oreophilus c.t. - Boulder	24	<1%
Wetland (Foothills And Basins West)	13	<1%

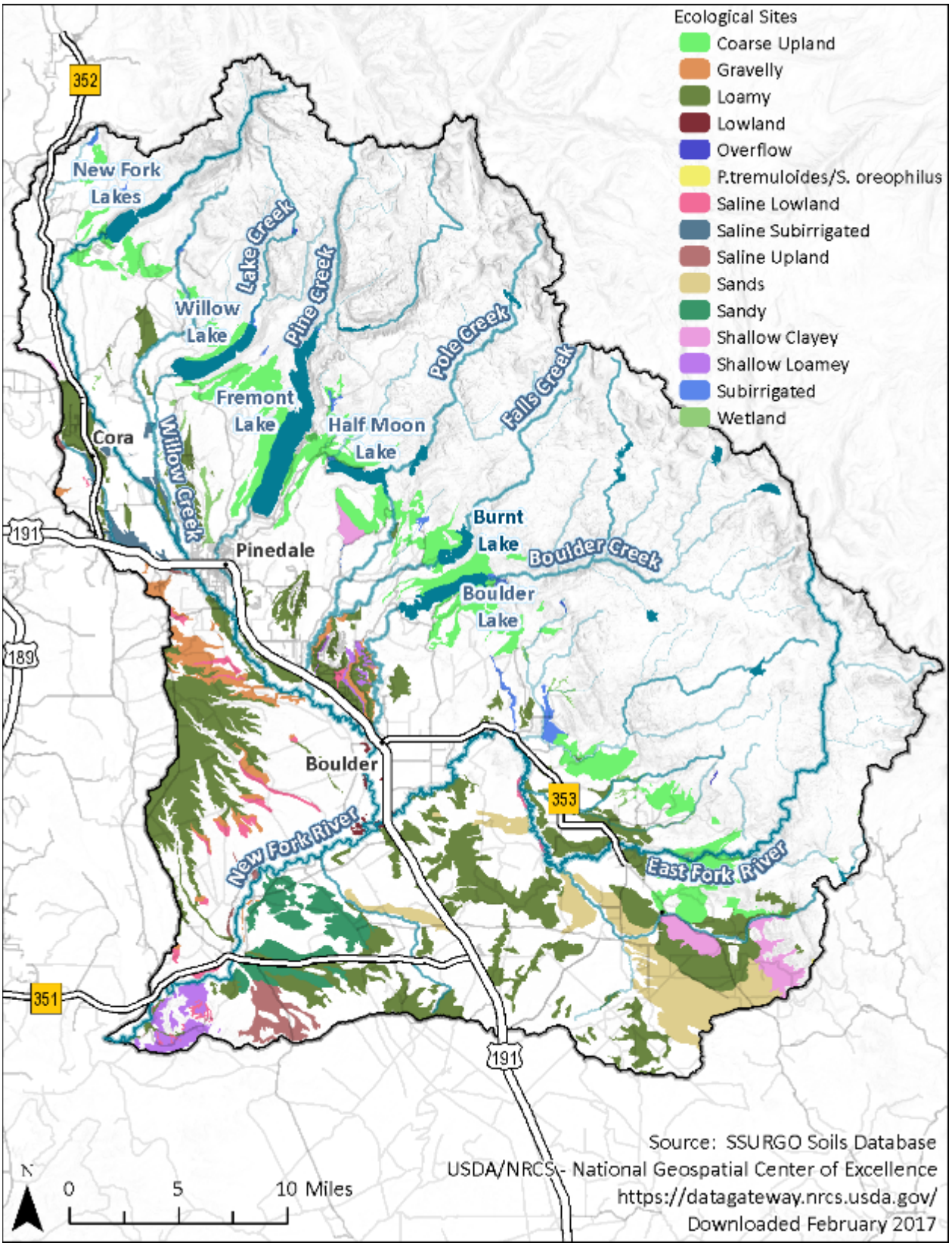

Figure 31. NRCS Ecological Sites in the New Fork River watershed.

2.10 Wetlands

The following provides a general description of the types and distribution of wetlands in the watershed, an assessment of the accuracy of the available wetland mapping, a preliminary assessment of wetland functions, and a summary of the current threats to this important habitat type.

2.10.1 Existing Wetland Profile

According to the National Wetland Inventory (NWI) (USFWS 2016), there are 58,021 acres of wetlands in the New Fork River watershed (**Figure 32** and **Table 11**)[2], which is 7 percent of the total area of the watershed. Freshwater emergent wetlands include irrigated hayfields, wet meadows, and emergent vegetation zones around more permanent water features like rivers and ponds; these are the most common wetland type in the watershed. Freshwater emergent wetlands cover 47,965 acres, or approximately 83 percent of the total wetland acres, and comprise approximately 6 percent of the watershed. The second most common wetland type is shrub wetlands, which are typically interspersed with freshwater emergent wetlands in riverine flood plains. Shrub wetlands cover 6,853 total acres, or approximately 12 percent of the total wetland acres, and comprise approximately 1 percent of the watershed. The remaining wetland types in the watershed (forested wetland, freshwater ponds, and unconsolidated bottom/shore) comprise only approximately 5 percent of the total wetland acres and less than 1 percent of the watershed.

Table 11. Total and percent acres by wetland type and NWI classification in the New Fork River watershed

NWI CODE	NWI WETLAND TYPE	AREA (ACRES)	RELATIVE AREA OF WETLANDS IN THE WATERSHED	RELATIVE AREA OF ALL LAND COVERS IN THE WATERSHED
PFO	Forested Wetland	19	<1%	<1%
PEM	Freshwater Emergent Wetland	47,965	83%	6%
PAB	Freshwater Pond	1,864	3%	<1%
PSS	Shrub Wetland	6,853	12%	1%
PUB & PUS	Unconsolidated Bottom/Shore	1,320	2%	<1%
	Total	***58,021***	***100%***	***7%***

Note: Areas are rounded to the nearest acre and percent.

[2] The NWI data includes nonwetland features such as deep water lakes and stream channels. While these features are important water resources in the basin and represent 33,179 acres or 4% of total land area, they are not considered further in this discussion of wetlands.

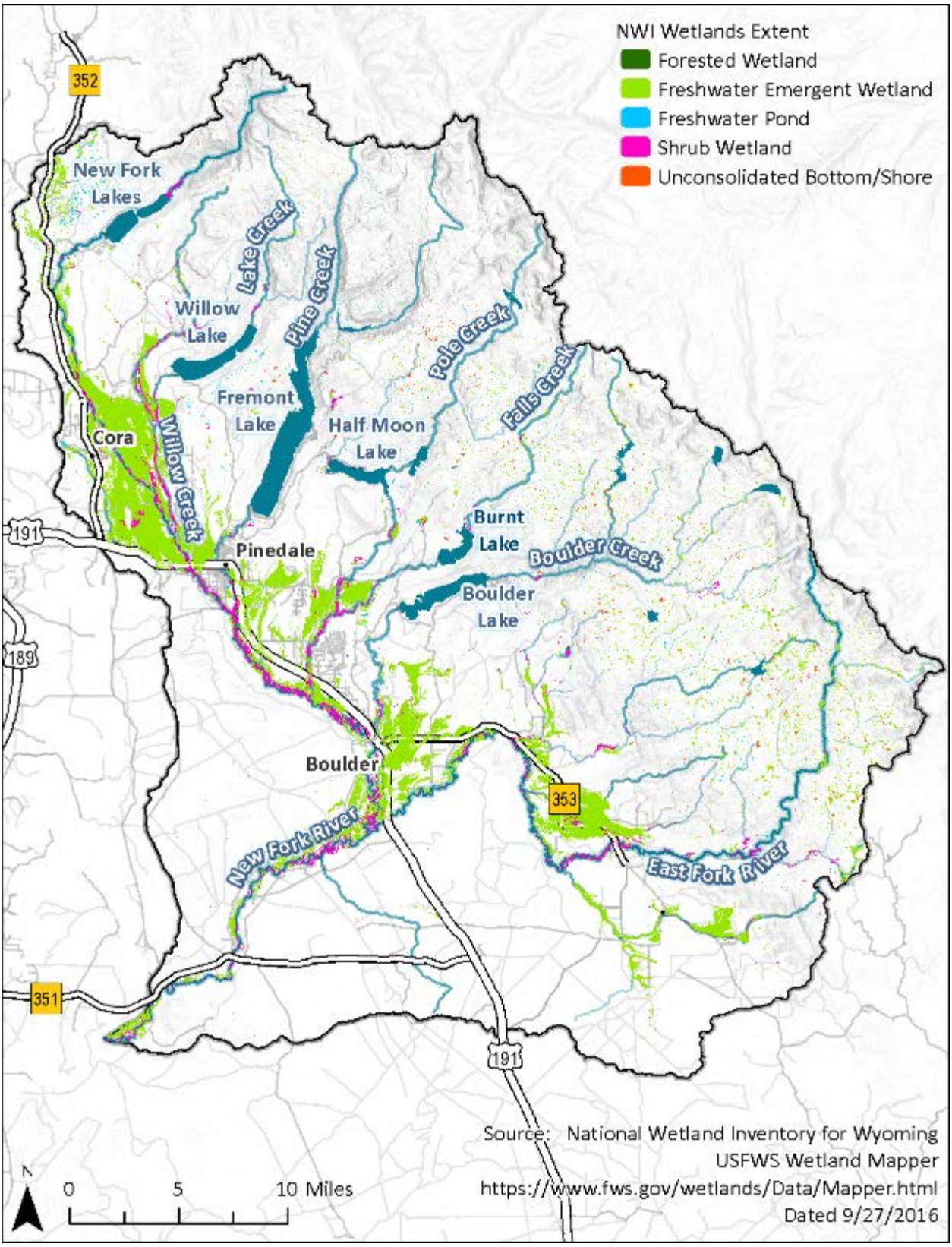

Figure 32. NWI wetlands within the New Fork River watershed.

Seasonally flooded and temporarily flooded are the two most common wetland hydrologic regimes in the basin. Seasonally flooded wetlands have surface water present for extended periods during the growing season but are dry by the end of the season (in most years). Many riverine shrublands located along rivers and streams that depend on snowmelt fall into this category. Seasonally flooded wetlands account for approximately 5 percent of the watershed area and 67 percent of the wetland acres. Temporarily flooded wetlands have surface water for brief periods during the growing season. Many freshwater emergent wetlands are temporarily flooded. Approximately 2 percent of the watershed area, and 25 percent of the wetland area, is mapped as temporarily flooded (**Table 12**).

Table 12. Total and percent acres of each wetland type by NWI classification of water regime in the New Fork River watershed

NWI CODE	WATER REGIME	AREA (ACRES)	RELATIVE AREA OF WETLANDS TYPE IN THE WATERSHED	RELATIVE AREA OF ALL LAND COVERS IN THE WATERSHED
A	Temporarily Flooded	14,708	25%	2%
B	Saturated	264	<1%	<1%
C	Seasonally Flooded	38,648	67%	5%
F	Semi-permanently Flooded	2,548	4%	<1%
G	Intermittently Exposed	562	1%	<1%
H	Permanently Flooded	1,290	2%	<1%
	Total	***58,021***	***100%***	***7%***

Note: Areas are rounded to the nearest acre and percent.

NWI maps include modifiers to identify waterbodies that have man-made and natural alterations. More than 99 percent of the wetlands in the New Fork River watershed have no modifiers (**Table 13**). Beaver activity is the only natural alteration mapped. Beaver-influenced wetlands account for approximately 48 acres of waterbodies, mainly freshwater ponds, which is less than 0.01 percent of the total wetland area. Man-made alterations mapped by NWI include wetlands that have been diked or impounded, excavated, or partly drained or ditched. Wetlands mapped with these alterations total less than 300 acres and comprise less than 1 percent of the total wetland area.

Table 13. Total and percent acres of wetlands classified with NWI modifiers of wetland alterations in the New Fork River watershed

NWI WETLAND TYPE	NO MODIFIER		DIKED/IMPOUNDED		BEAVER		EXCAVATED		PARTLY DRAINED/DITCHED	
	Area (Acres)	Relative to this Wetland Type	Area (Acres)	Relative to this Wetland Type	Area (Acres)	Relative to this Wetland Type	Area (Acres)	Relative to this Wetland Type	Area (Acres)	Relative to this Wetland Type
Forested Wetland	12	63%	0	--	7	37%	0	--	0	--
Freshwater Emergent Wetland	47,901	>99%	2	<1%	0	--	58	<1%	4	<1%
Freshwater Pond	1,640	88%	155	8%	41	2%	28	2%	0	--
Shrub Wetland	6,832	>99%	21	<1%	0	--	0	--	0	--
Unconsolidated Bottom/Shore	1,305	99%	13	1%	0	--	3	<1%	0	--
Total area and relative area of all wetlands	***57,689***	***>99%***	***191***	***<1%***	***48***	***<1%***	***89***	***<1%***	***4***	***<1%***

Note: Areas are rounded to the nearest acre and percent.

Irrigation was not explicitly included in the NWI mapping as a modifier, even though much of the watershed receives irrigation for agricultural hay production. There are approximately 57,000 acres (7 percent of the study area) mapped as irrigated lands (RJH Consultants 2017). Over 60 percent of the wetlands within the New Fork River watershed could receive irrigation inputs (**Table 14**, **Figure 33**, and **Figure 34**). Freshwater emergent wetlands are most commonly affected by irrigation, with over 70 percent of this wetland type intersecting irrigated lands. Shrub wetlands represent the second-largest wetland group receiving irrigation inputs. Approximately 14 percent of shrub lands are irrigated. These two wetland types often occur in floodplains that are used for hay production and cattle grazing.

Table 14. Total and percent acres of wetland type intersecting irrigated lands in the New Fork River watershed

NWI WETLAND TYPE	AREA (ACRES)	AREA INTERSECTING MAPPED IRRIGATED LAND (ACRES)	RELATIVE AREA INTERSECTING MAPPED IRRIGATED LAND
Forested Wetland	19	0	3%
Freshwater Emergent Wetland	47,965	33,979	71%
Freshwater Pond	1,864	141	8%
Shrub Wetland	6,853	976	14%
Unconsolidated Bottom/Shore	1,320	2	<1%
Total	***58,021***	***35,098***	***60%***

Note: Areas are rounded to the nearest acre and percent.

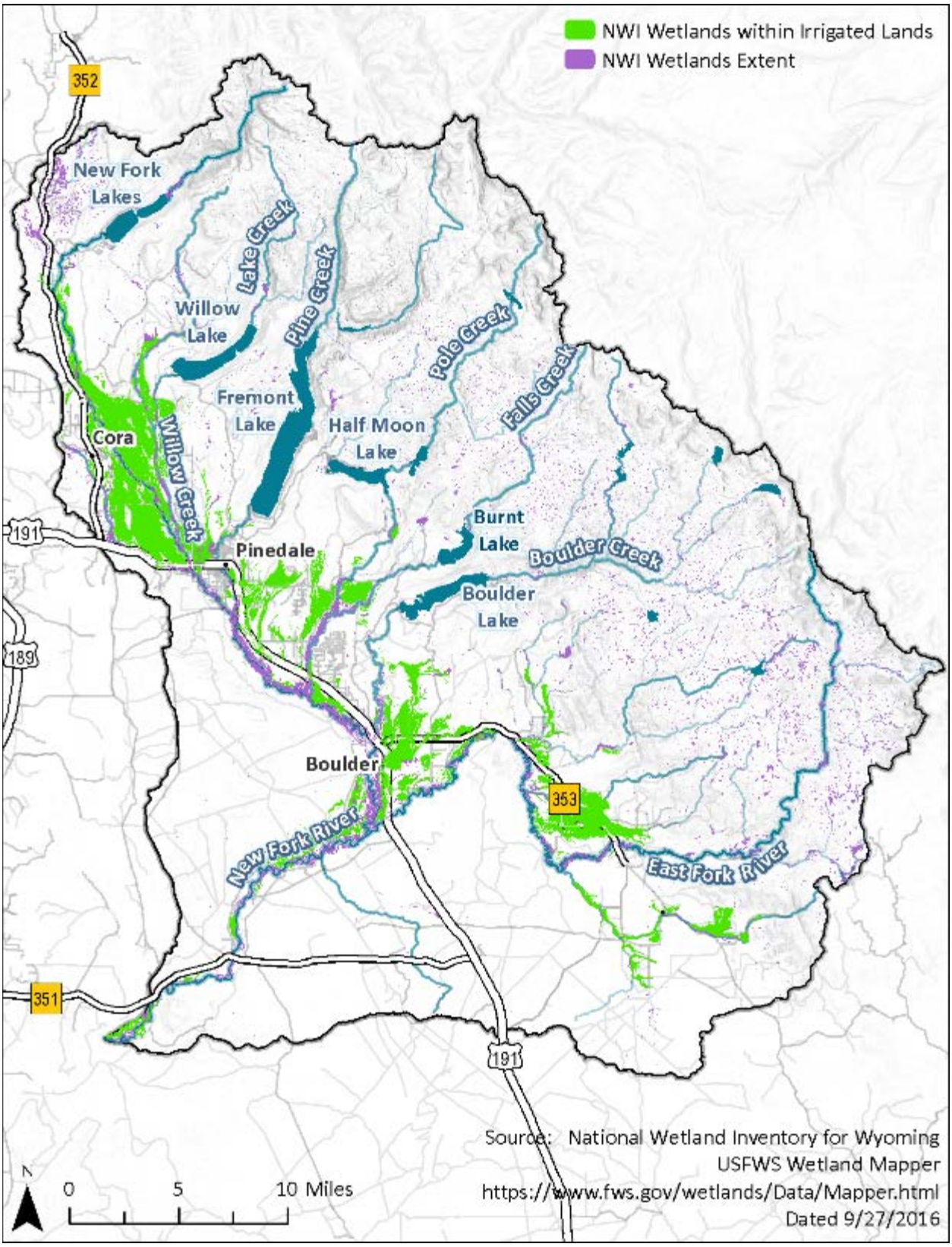

Figure 33. NWI wetlands intersecting irrigated lands in the New Fork River watershed.

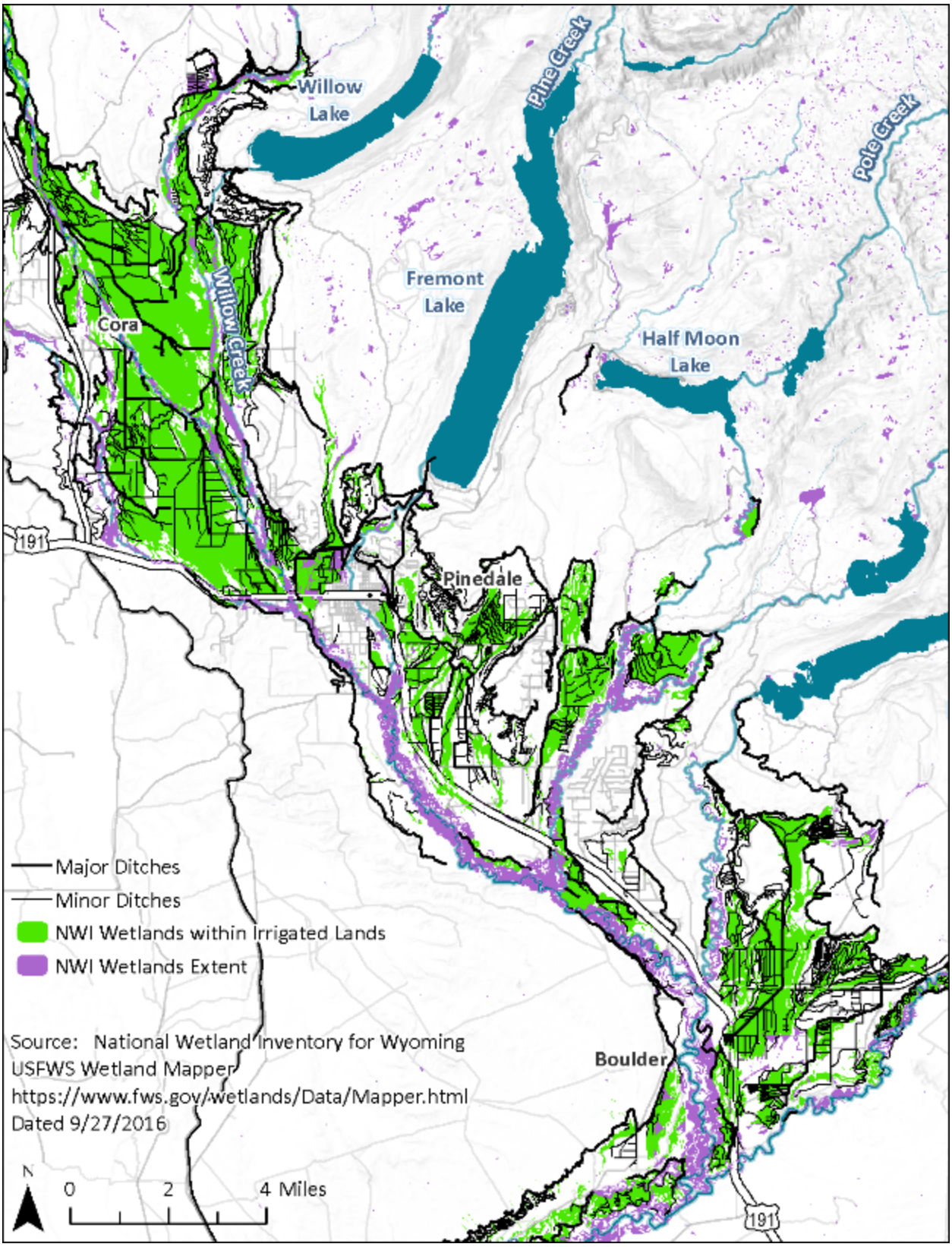

Figure 34. NWI wetlands showing the irrigation network.

2.10.2 Accuracy of Available Wetland Maps

The NWI maps were never intended to show the limits of regulated wetlands. A "Special Note" that appears on the official U.S Fish and Wildlife Service (USFWS) maps clearly points this out:

> Federal, state and local regulatory agencies with jurisdiction over wetlands may define and describe wetlands in a different manner than that used in this inventory. There is no attempt, in either the design or products of this inventory, to define the limits of proprietary jurisdiction of any federal, state or local government or to establish the geographical scope of the regulatory programs of government agencies. Persons intending to engage in activities involving modifications within or adjacent to wetland areas should seek the advice of appropriate federal, state or local agencies concerning specified agency regulatory programs and proprietary jurisdictions that may affect such activities.

An EPA-funded wetland condition assessment, initiated in 2012, revealed the NWI maps for the Upper Green River Watershed can be inaccurate. Some areas mapped as wetlands held few if any wetland characteristics. Also, the NWI maps failed to document small patches of productive wetland habitat such as depressions and seepage areas associated with irrigated pastures and margins of storage reservoirs that are valuable for a variety of wildlife (Patla 2014).

Purpose of NWI Maps

NWI maps are intended for planning/reconnaissance-level purposes. Contact with the appropriate regulatory authorities and a field-level, jurisdictional delineation is recommended before initiating any activities that might disturb a suspected wetland.

2.10.3 Wetland Functions

A wetland functional analysis specific to the New Fork River watershed has not been conducted. However, two documents prepared for the broader Green River Core Wetland Complex (GRCWC) were completed that provide insights into the function and condition of wetlands in the New Fork River watershed. All of the wetlands within the New Fork River watershed are encompassed within the GRCWC (see **Section 2.11.4**). Tibbets et al. (2015) completed a condition assessment, and Patla (2014) developed a wetland conservation strategy for the GRCWC. The conclusions reached by Tibbets et al. (2015) and Patla (2014) are considered generally valid for the wetlands within the New Fork River watershed and are summarized herein.

According to Patla (2014), the importance of riparian and wetland habitats in the arid, high elevation basins of Wyoming cannot be overstated. About 90 percent of Wyoming's wildlife use wetland habitats daily or seasonally during their life cycles, and 70 percent of Wyoming's birds are considered wetland obligates. Mesic habitats such as sedge marshes, willow bottoms, cottonwood forests, and irrigated fields provide critical foraging, nesting, roosting, and resting habitats for scores of species during breeding, migration, and winter periods.

Species of Greatest Conservation Need (SGCN) affiliated with wetland and riparian habitats in the GRCWC include 34 bird species designated Native Species Status, Priorities I–IV, as well as six mammal, four fish, and three amphibian species. In addition, 75 species of waterfowl and waterbirds, and dozens of more common bird and mammal species frequent wetlands within the basin.

Projections for the GRCWC by Tibbets et al. (2015) revealed that 96 percent of wetlands are moderately to highly disturbed and less than 4 percent are in the low disturbance category. Among wetland types, emergent marshes (generally higher elevation glacial pothole wetlands) were the least disturbed, followed by riparian woodland and shrublands. Wet meadows, mainly irrigated hayfields, were the most disturbed and hydrologically modified.

2.10.4 Threats to Wetlands

Patla (2015) identified the primary threats to wetlands in the GRCWC (**Table 15**). Dam and reservoir construction, conversion of center pivot irrigation, and overutilization by livestock and wild ungulates are of the most importance to water use and development (i.e., the subject of this watershed study). Dam and reservoir construction could alter the hydrology of riparian wetlands located within the riparian areas downstream, depending upon the dam operation practices. As described above, over 60 percent of the wetlands within the New Fork River watershed may receive irrigation inputs. Although conversion of flood irrigation to center pivot irrigation might ultimately increase stream flows, numerous wetlands sustained by flood irrigation could be lost. In addition, important foraging habitat used by waterfowl in spring and fall could be lost if flood irrigation from agricultural fields is eliminated. Finally, overutilization of riparian areas can inhibit cottonwood and willow regeneration and adversely affect vegetation composition and structure, water quality, stream morphology, fisheries habitat, and overall wildlife diversity and abundance. Grazing within wetlands can eliminate cover, damage root mats, trample nests, and increase nest predation rates.

Table 15. Primary threats to the Green River Wetland Complex

CAUSE/SOURCE	THREAT LEVEL			
	LOW	MODERATE	HIGH	EXTREME
Climate Change/Drought				X
Energy/Mineral Development			X	
Rural Residential Development			X	
Dam and Reservoir Construction		X		.
Conversion to Center Pivot Irrigation		X		
Overutilization by Livestock and Wild Ungulates		X		
Invasive Species	X			

Source: Patla 2014

2.11Wildlife and Fisheries

The New Fork River watershed spans two MLRAs: the Central Rocky Mountains and the Cool Central Desertic Basins and Plateaus (NRCS 2016). Wildlife species present in the watershed reflect the habitats provided in these MLRAs. This section of the report provides the most current representations of important big game habitat developed by WGFD, followed by a discussion of those wildlife species that might have special regulatory status (i.e., greater sage-grouse and federal and state-listed rare, threatened, endangered, or special concern species), and unique wildlife habitats that occur in the watershed.

2.11.1 Big Game

The primary big game species in the New Fork River watershed include mule deer, antelope, elk, and moose. White-tailed deer exist in small populations along cottonwood-willow river corridors and in proximity to croplands within the watershed; however, these generally sedentary, small herds are not managed by the state or promoted in this area. WGFD maps the seasonal ranges for each big game species and makes special note of areas listed as crucial habitat and parturition areas (birthing areas). WGFD's crucial habitat or range is defined as those seasonal ranges or habitats (mostly winter range) that have been documented as the determining factor in a population's ability to maintain itself at a certain level over a long period of time. Seasonal ranges, crucial habitats, parturition areas, and migration routes for mule deer, antelope, elk, and moose are shown in **Figure 35** through **Figure 38**.

In Wyoming, collar studies that track the detailed movements of animals suggest that more than 90 percent of ungulates (including mule deer, elk, pronghorn, moose, bighorn sheep, mountain goat, bison, and white-tailed deer) are migratory (Sawyer et al. 2014). The longest ungulate migration ever recorded in the lower 48 states was recently discovered in western Wyoming. Each spring and fall, mule deer travel a one-way distance of 150 miles from the Red Desert to the Hoback Basin and surrounding mountain through the New Fork River watershed (**Figure 39**). There are a number of critical areas along this migration corridor that may have relevance to future water developments in the New Fork River watershed. These include Fremont Lake, Boulder Lake, and Willow Lake. An estimated 4,000 to 5,000 mule deer cross the outlet from Fremont Lake (or Pine Creek) in an area only 400 meters wide. Similarly, thousands of mule deer migrate through narrow (less than 0.5-mile-wide) bottlenecks at the outlet of Boulder and Willow lakes.

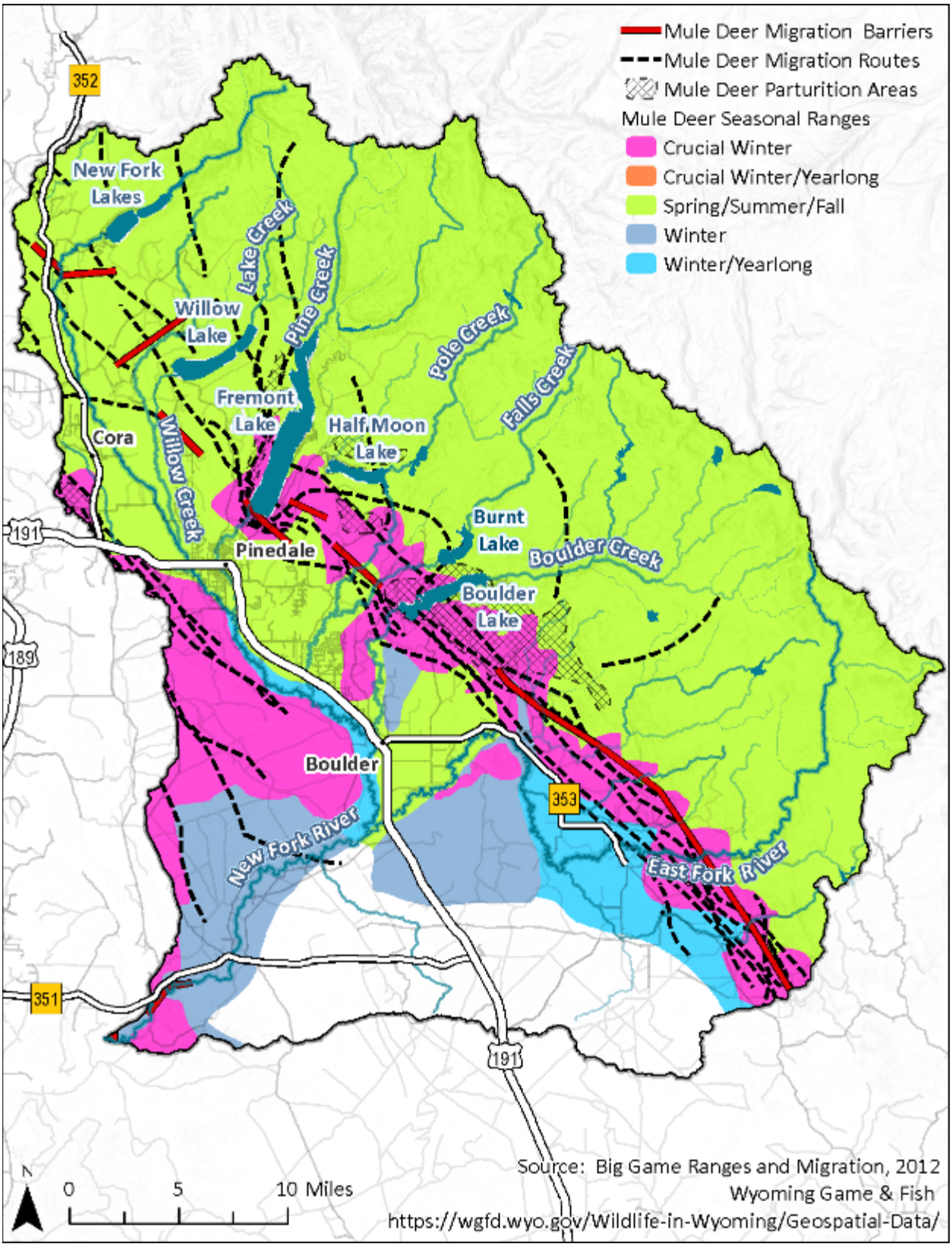

Figure 35. Mule deer range in the New Fork River watershed.

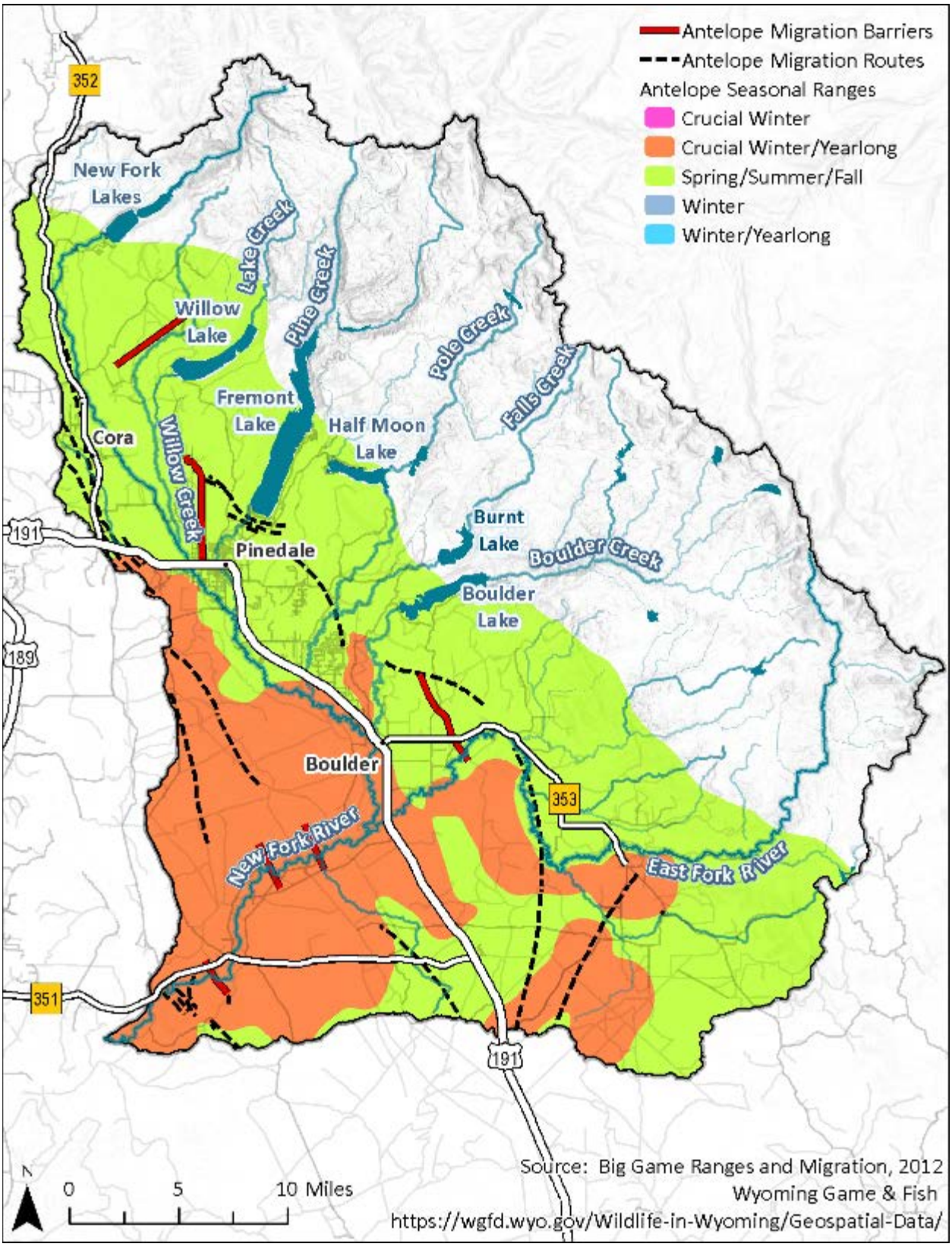

Figure 36. Antelope range in the New Fork River watershed.

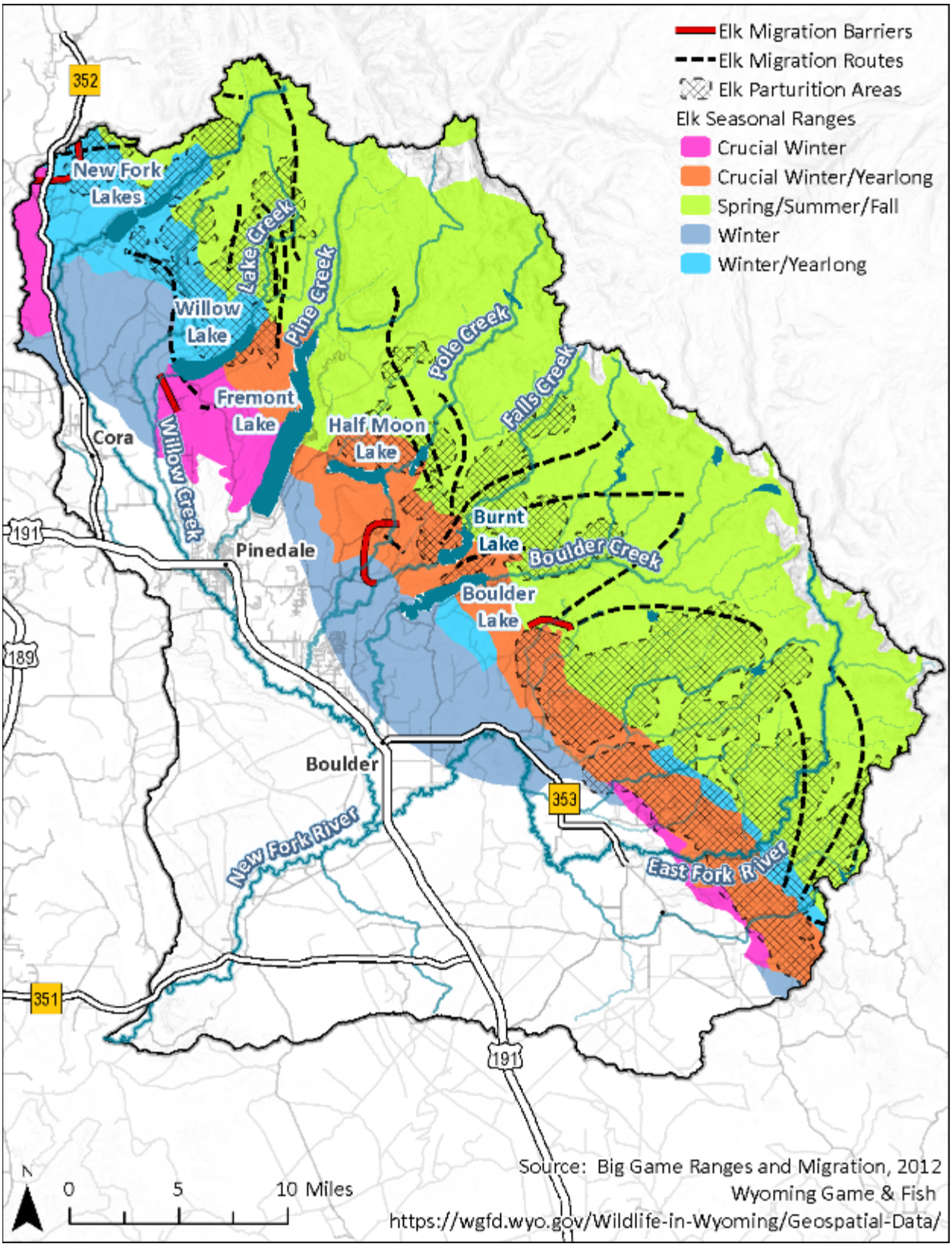

Figure 37. Elk range in the New Fork River watershed.

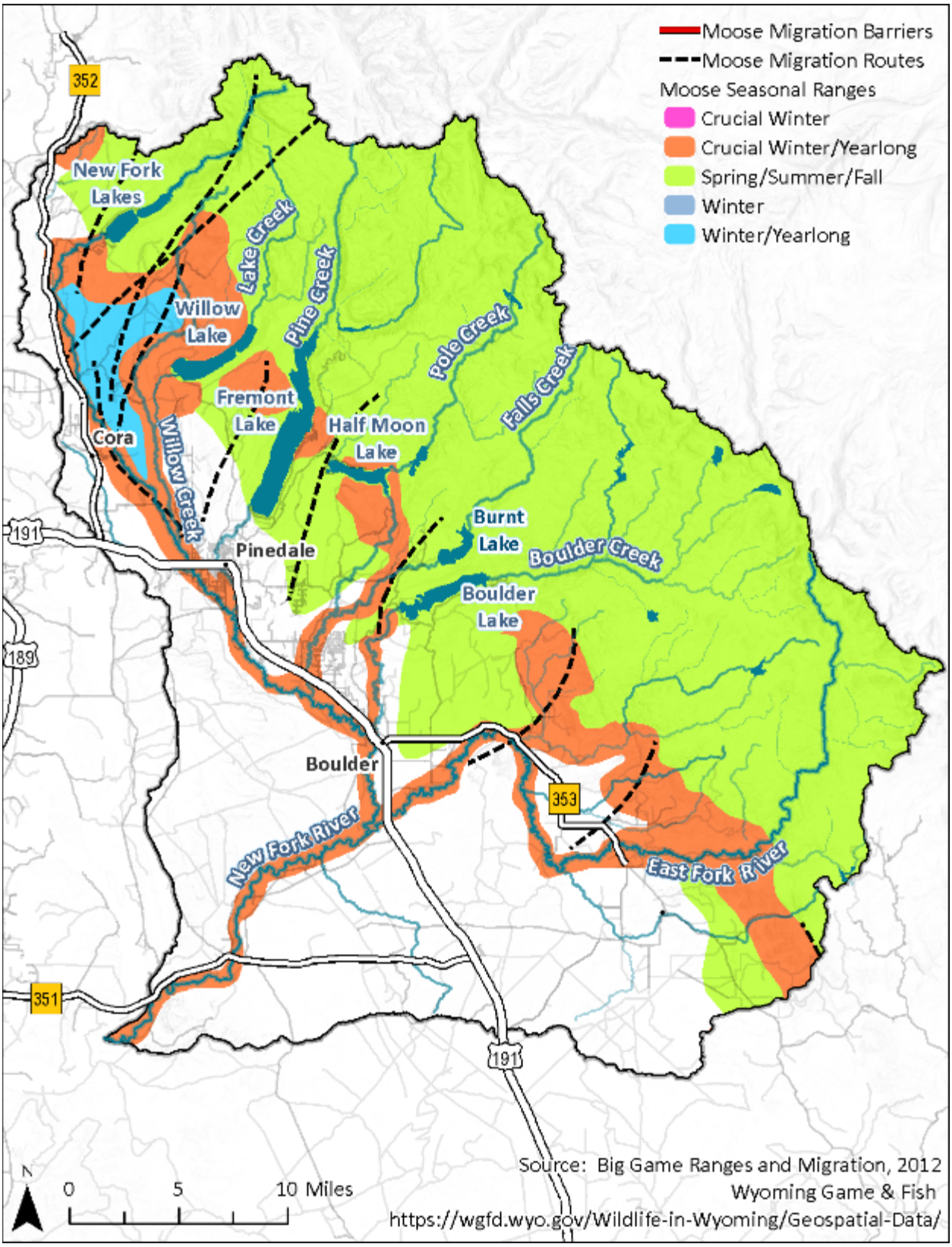

Figure 38. Moose range in the New Fork River watershed.

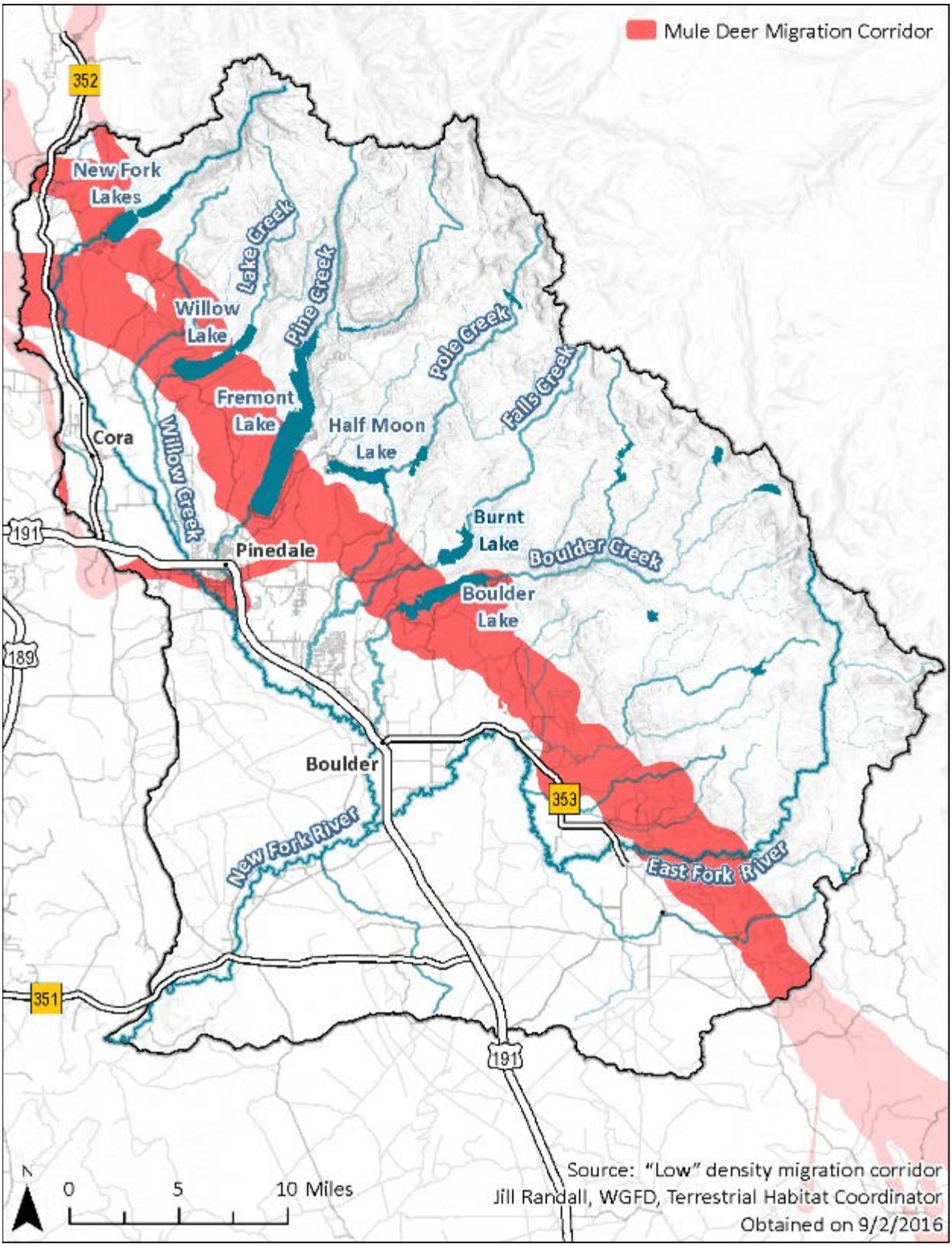

Figure 39. Mule deer migration route through the New Fork River watershed.

2.11.2 Greater Sage-Grouse

On March 23, 2010, the USFWS placed the greater sage-grouse on the federal list of candidate species under the Endangered Species Act of 1973, as amended (ESA). Greater sage-grouse were found to warrant the protections afforded to a listed species under ESA, but this action was precluded by higher-priority listing efforts. On October 2, 2015, the USFWS found that listing the greater sage-grouse was not warranted (80 FR 59857, October 2, 2015).

In 2008 the Governor of Wyoming implemented a Core Area Protection strategy for greater sage-grouse by executive order, designed to implement protective strategies for sage-grouse habitats, populations, and connectivity areas to conserve sage-grouse and preclude the need for listing the bird as a threatened or endangered species (Freudenthal 2008). The Executive Order and associated map of Core Area protected lands were revised by Governor Mead in 2015 (Freudenthal 2015). Sage-grouse core areas and leks (areas where male sage-grouse gather together to perform courtship displays) are shown in **Figure 40**.

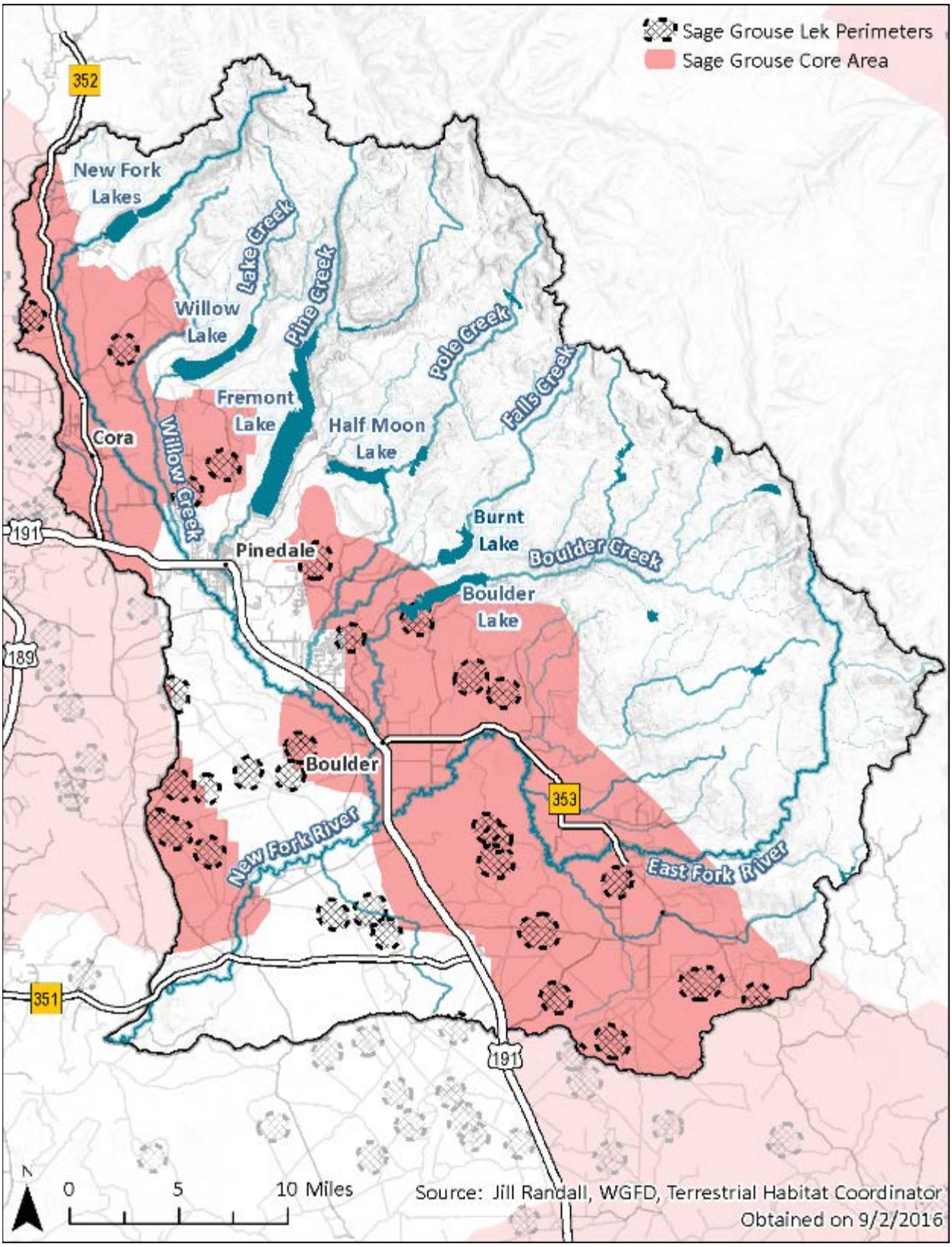

Figure 40. Greater sage-grouse critical habitats in the New Fork River watershed.

2.11.3 Threatened, Endangered, and Sensitive Species

A list of documented rare species occurrences from the New Fork River watershed was obtained from the Wyoming Natural Diversity Database (Arnett 2016). A complete list of all documented occurrences of rare or otherwise sensitive species is provided in Appendix K – Wyoming Natural Diversity Database Occurrence Records. The list includes the status of species relative to the ESA and any special designations that may have been identified by BLM, USFS, or WGFD.

The ESA directs the USFWS to identify and protect rare plants and animals. Among the list obtained from Wyoming Natural Diversity Database for the New Fork River watershed are four species listed as endangered (whooping crane and black-footed ferret) or threatened (Canada lynx and grizzly bear) (**Table 16**).

USFS Region 2 and Region 4 and the BLM Wyoming Office have developed lists of sensitive species that warrant special attention on lands managed by the two agencies. Included on the list of species within the New Fork River watershed are 30 species considered sensitive by the BLM (**Table 17**) and 23 species considered sensitive by the USFS (**Table 18**).

The Congressional guidelines for State Wildlife Action Plans specifies that each state must provide "information on the distribution and abundance of species of wildlife, including low and declining populations as the state wildlife agency deems appropriate, that are indicative of the diversity and health of the state's wildlife." These species have been termed Species of Greatest Conservation Need (SGCN). A complete list of the SGCN that have been observed in the New Fork River watershed is provided in Appendix K – Wyoming Natural Diversity Database Occurrence Records. SGCN have been placed into tiers as follows:

- Tier I – highest priority
- Tier II – moderate priority
- Tier III – lowest priority

The Tier I SGCN that have been observed in the New Fork River watershed are listed in **Table 19**.

Table 16. USFWS rare plants and animals in the New Fork River watershed

SCIENTIFIC NAME	COMMON NAME	STATUS
Birds		
Centrocercus urophasianus	Greater Sage-Grouse	Candidate Warranted but Precluded (C)
Lagopus leucura	White-tailed Ptarmigan	Petition Under Review (UR)
Grus americana	Whooping Crane	Listed Endangered (LE), and Endangered - Nonessential Experimental Population (LEXN)
Insects		
Danaus plexippus plexippus	Monarch Butterfly	Petition Under Review (UR)
Mammals		
Mustela nigripes	Black-footed Ferret	Listed Endangered (LE), and Endangered - Nonessential Experimental Population (LEXN)
Lynx canadensis	Canada Lynx	Listed Threatened (LT)
Canis lupus	Gray Wolf	Proposed for Delisting (PD)
Ursus arctos arctos	Grizzly Bear	Listed Threatened (LT)
Myotis lucifugus	Little Brown Myotis	Petition Under Review (UR)
Cynomys leucurus	White-tailed Prairie Dog	Petition Under Review (UR)

Source: Arnett 2016

Table 17. BLM sensitive species within the New Fork River watershed

SPECIES NAME	COMMON NAME
Amphibians	
Rana luteiventris	Columbia Spotted Frog
Spea intermontana	Great Basin Spadefoot
Lithobates pipiens	Northern Leopard Frog
Anaxyrus boreas - Northwestern Clade	Northwestern Clade Western Toad
Birds	
Haliaeetus leucocephalus	Bald Eagle
Spizella breweri	Brewer's Sparrow
Athene cunicularia	Burrowing Owl
Tympanuchus phasianellus columbianus	Columbian Sharp-tailed Grouse
Buteo regalis	Ferruginous Hawk
Centrocercus urophasianus	Greater Sage-Grouse
Lanius ludovicianus	Loggerhead Shrike
Numenius americanus	Long-billed Curlew
Charadrius montanus	Mountain Plover
Accipiter gentilis	Northern Goshawk
Falco peregrinus	Peregrine Falcon
Oreoscoptes montanus	Sage Thrasher
Artemisiospiza nevadensis	Sagebrush Sparrow
Cygnus buccinator	Trumpeter Swan
Plegadis chihi	White-faced Ibis
Plegadis chihi	White-faced Ibis
Catostomus latipinnis	Flannelmouth Sucker
Gila robusta	Roundtail Chub
Plants	
Phlox pungens	Beaver Rim phlox
Lesquerella macrocarpa	Large-fruited bladderpod
Astragalus diversifolius	Meadow milkvetch
Antennaria arcuata	Meadow pussytoes
Astragalus racemosus var. treleasei	Trelease's racemose milkvetch
Mammals	
Myotis thysanodes	Fringed Myotis
Thomomys idahoensis	Idaho Pocket Gopher
Myotis evotis	Long-eared Myotis
Brachylagus idahoensis	Pygmy Rabbit
Cynomys leucurus	White-tailed Prairie Dog

Source: Arnett 2016

Table 18. USFS sensitive species within the New Fork River watershed

SCIENTIFIC NAME	COMMON NAME
Amphibians	
Rana luteiventris	Columbia Spotted Frog
Anaxyrus boreas - Northwestern Clade	Northwestern Clade Western Toad
Birds	
Picoides dorsalis	American Three-toed Woodpecker
Haliaeetus leucocephalus	Bald Eagle
Aegolius funereus	Boreal Owl
Tympanuchus phasianellus columbianus	Columbian Sharp-tailed Grouse
Gavia immer	Common Loon
Psiloscops flammeolus	Flammulated Owl
Strix nebulosa	Great Gray Owl
Centrocercus urophasianus	Greater Sage-Grouse
Histrionicus histrionicus	Harlequin Duck
Accipiter gentilis	Northern Goshawk
Falco peregrinus	Peregrine Falcon
Cygnus buccinator	Trumpeter Swan
Plants	
Carex luzulina var. atropurpurea	Black and purple sedge
Astragalus diversifolius	Meadow milkvetch
Antennaria arcuata	Meadow pussytoes
Parrya nudicaulis	Naked-stemmed parrya
Draba globosa	Rockcress whitlow-grass
Mammals	
Ovis canadensis	Bighorn Sheep
Pekania pennanti	Fisher
Canis lupus	Gray Wolf
Brachylagus idahoensis	Pygmy Rabbit

Source: Arnett 2016

Table 19. Tier I SGCN within the New Fork River watershed

SPECIES NAME	COMMON NAME
Amphibians	
Spea intermontana	Great Basin Spadefoot
Anaxyrus boreas - Northwestern Clade	Northwestern Clade Western Toad
Birds	
Haliaeetus leucocephalus	Bald Eagle
Athene cunicularia	Burrowing Owl
Gavia immer	Common Loon
Buteo regalis	Ferruginous Hawk
Strix nebulosa	Great Gray Owl
Centrocercus urophasianus	Greater Sage-Grouse
Charadrius montanus	Mountain Plover
Accipiter gentilis	Northern Goshawk
Fish	
Catostomus latipinnis	Flannelmouth Sucker
Gila robusta	Roundtail Chub
Mammal	
Mustela nigripes	Black-footed Ferret
Lynx canadensis	Canada Lynx

Source: Arnett 2016

2.11.4 Unique Wildlife Habitats

Long-Billed Curlew

The Long-billed Curlew inhabit a variety of grassland types ranging from moist meadow grasslands to agricultural areas to dry prairie uplands, usually near water. It prefers a complex of shortgrass prairies, agricultural fields, wet and dry meadows and prairies, and grazed mixed-grass and scrub communities. It nests on the ground in habitat that usually includes grass less than 30 centimeters (12 inches) high, bare ground, shade, abundant invertebrate prey, and a minimum of 40 hectares (100 acres) of suitable habitat (WGFD 2010). Long-billed Curlews (*Numenius americanus*) are declining in many parts of their range and factors include habitat loss and degradation, environmental toxins, and human disturbance (Dugger and Dugger 2002). A breeding population of Long-billed Curlews in the New Fork River watershed was studied in the 1980s and again in 2015 (**Figure 41**) (Carlisle and Coates 2016). Relative to other sites monitored in 2015 and in the 1980s in Idaho and Wyoming, this and another area just outside the watershed on Horse Creek had the highest density of breeding curlews. This area also exhibits some of the overall highest nesting success.

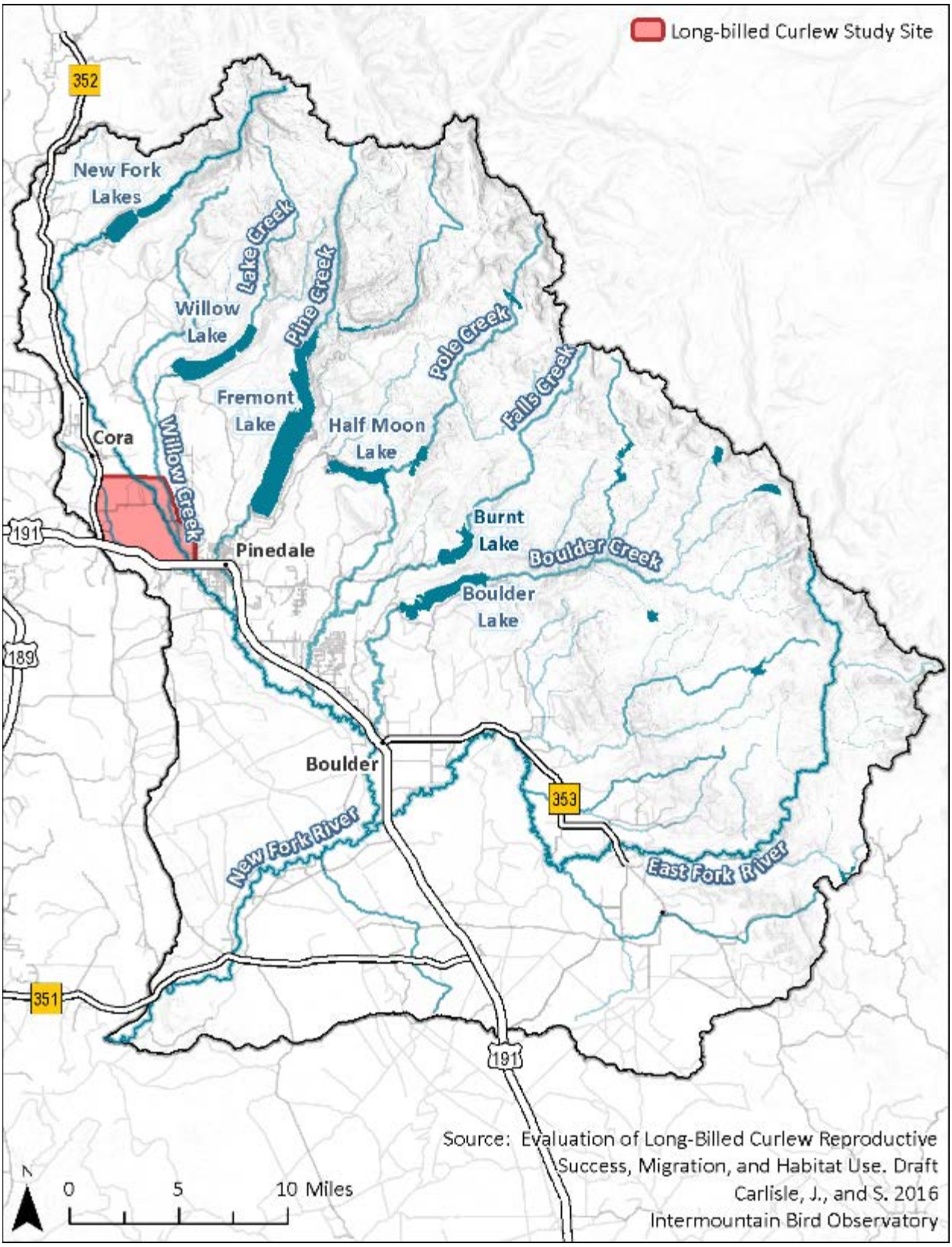

Figure 41. Long-billed Curlew study site in the New Fork River watershed.

Trumpeter Swan

In the early 1900s, fewer than 70 Trumpeter Swans persisted year-round in the lower 48 states. Although numbers increased during the last century, growth stalled in the 1960s given the extremely limited summer and winter range of this population. Over the past 15 years, a new breeding flock was established in the Green River watershed (including the New Fork River watershed) as a result of the release of captive-raised swans and habitat improvements. WGFD began to focus management efforts on wetland conservation projects in 2004 that could provide additional shallow-water wetland habitat for this expanding population. To date, WGFD's Nongame Trumpeter Swan Green River Expansion Project has raised more than $2 million in grants for wetland restoration, creation, and conservation. In 2014 swans used wetland sites developed by WGFD as cooperative projects with landowners at four locations in the Pinedale area. Funding for these projects was obtained through the Wyoming Landscape Conservation Initiative (WLCI), Wyoming Wildlife and Natural Resource Trust (WWNRT), NRCS programs, and the USFWS Partners for Fish and Wildlife Program. Construction is currently underway for two additional ponds on a ranch near Boulder, Wyoming. Planning work has also began on wetland and riparian restoration projects funded by a standard North American Wetlands Conservation Act grant, which was awarded to the WGFD, the USFWS, and 14 other partners for a total of $1 million for conservation easements and wetland habitat projects in the Upper Green River Basin.

Green River Basin Wetland Complex

The Wyoming Wetlands Conservation Strategy was developed to guide statewide conservation efforts and to provide a technical foundation for the wetland component of the *2010 Wyoming State Wildlife Action Plan*. Regional plans have been prepared to provide more specific guidance in the priority wetland complexes identified in the statewide strategy. The Green River Basin Wetland Complex is one of nine priority wetland complexes identified in Wyoming (**Figure 42) (**Patla 2014). This wetland complex encompasses the majority of wetlands within the New Fork River watershed. These are described in **Section 2.10**.

Although profound changes have occurred in the Green River Basin since the 1800s and the rate of change continues to accelerate, the basin still contains outstanding wetland and riparian habitats. The Wetland Conservation Strategy for this area includes the following objectives:

1. Strive for a no net loss of wetlands in the Green River Basin Wetland Complex with a focus on preserving remaining high-quality wetlands and riparian habitats.
2. Continue to obtain conservation easements to protect important wetlands and riparian areas potentially vulnerable to future development, especially along major rivers and stream corridors.
3. Strive to improve existing maps of wetland habitat and use the most current data to identify and prioritize wetland sites for conservation, enhancement, and restoration.
4. Secure additional funding to support ongoing and future wetlands conservation and enhancement through the Intermountain West Joint Venture, WLCI, USFWS, NRCS, The Nature Conservancy, Ducks Unlimited, WWNRT, WGFD, BLM, USFS, and other partners.
5. Maintain and expand existing agency and nongovernmental organizations programs staffed with full-time positions that focus on wetland conservation and enhancement. Building relationships with the public is essential for project development on private lands.
6. Work with local, state, and federal government agencies to direct energy development outside of wetland and riparian areas, and to require restoration of sites that have been affected by past development.

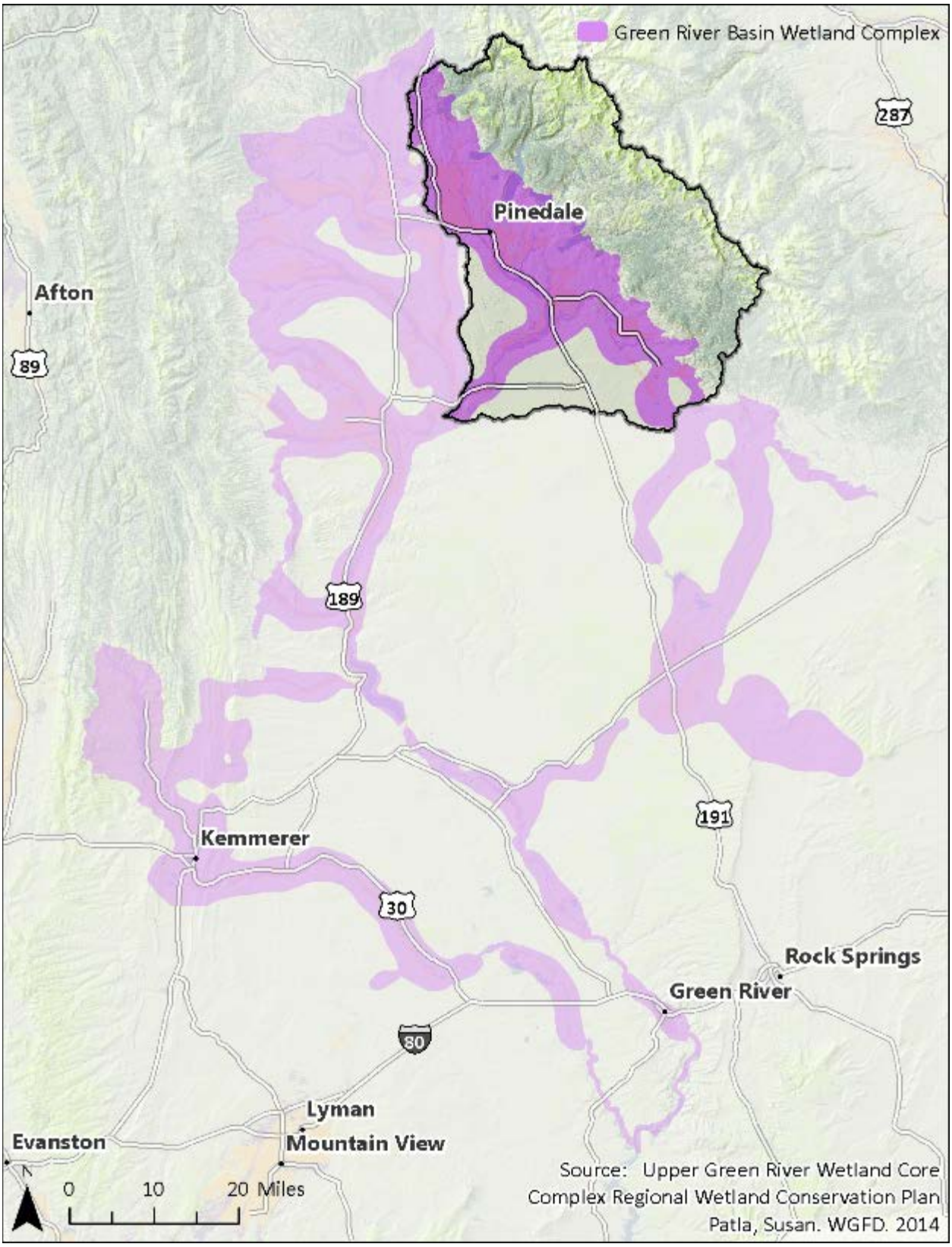

Figure 42. Green River Basin Wetland Complex.

2.11.5 Fisheries

Based on records obtained from WGFD's StreamLake Database, nine native and 20 nonnative fish species have been observed in the New Fork River watershed (Sexaur 2016) (**Table 20**). Of the observed native species, three are considered Wyoming SGCN: the roundtailed chub (*Gila robusta)*, flannelmouth sucker (*Catostomus latipinnis*), Colorado cutthroat trout (*Oncorhynchus clarkia)* (WGFD 2016). The waterbodies where these SGCN species have been observed in the New Fork River watershed are identified in **Table 21**.

Table 20. Fish species observed in the New Fork River watershed

NATIVE/NONNATIVE	COMMON NAME	SCIENTIFIC NAME
Native	Colorado River Cutthroat	*Oncorhynchus clarkii*
	Flannnelmouth Sucker	*Catostomus latipinnis*
	Mottled Sculpin	*Cottus bairdii*
	Mountain Sucker	*Catostomus platyrhynchus*
	Mountain Whitefish	*Prosopium williamsoni*
	Roundtail Chub	*Gila robusta*
	Speckled Dace	*Rhinichthys osculus*
	Utah Chub	*Gila atrarias*
	Utah Sucker	*Catostomus ardens*
Nonnative	Burbot	*Lota lota*
	Brook Trout	*Salvelinus fontinalis*
	Brown Trout	*Salmo trutta*
	Cutthroat Trout	*Oncorhynchus clarkii*
	Fathead Minnow	*Pimephales promelas*
	Flannelmouth x White Sucker	*Catostomus latipinnis x Catostomus commersoni*
	Grass Carp	*Ctenopharyngodon idella*
	Golden Trout	*Oncorhynchus aguabonita*
	Grayling	*Thymallus arcticus*
	Kokanee Salmon	*Oncorhynchus nerka*
	Lake Trout	*Salvelinus namaycush*
	Lake Chub	*Couesius plumbeus*
	Longnose Dace	*Rhinichthys cataractae*
	Rainbow Trout	*Oncorhynchus mykiss*
	Redside Shiner	*Richardsonius balteatus*
	RBT x CUT Hybrid	*Oncorhynchus mykiss x Oncorhynchus clarkii*
	Snake River Cutthroat	*Oncorhynchus clarkii*
	Tiger Trout	*Salmo trutta × Salvelinus fontinalis*
	White Sucker	*Catostomus commersoni*
	Yellowstone Cutthroat	*Oncorhynchus clarkii bouvieri*

Source: Sexauer 2016

Table 21. Recorded observations of flannelmouth sucker, roundtail chub, and Colorado River cutthroat in WGFD's StreamLake Database

FLANNELMOUTH SUCKER	ROUNDTAIL CHUB	COLORADO RIVER CUTTHROAT TROUT
Boulder Lake	Boulder Lake	Sunrise Lake
Fremont Lake	Fremont Lake	August Lake
Burnt Lake	Burnt Lake	Irish Canyon Creek
Halfmoon Lake	Halfmoon Lake	
Halfmoon Lake, Little	Halfmoon Lake, Little	
Pole Creek	Willow Lake	
Willow Lake	Scab Lake	
Upper and Lower New Fork Lake	Upper and Lower New Fork Lake	
Silver Creek	Boulder Lake	

Although roundtail chub and flannelmouth sucker were once widespread throughout the Colorado River basin, they currently occupy approximately 45 percent of their historic range in the Colorado River basin (WGFD 2010). They still occur in relatively low numbers throughout the Green River drainage of Wyoming, and lentic populations of roundtail chub occur in the Finger Lakes in the New Fork Drainage (WGFD 2010). The effects of water development and reservoir construction exacerbated by drought have cut off these species' migratory corridors, degraded habitat, and encouraged the spread of nonnatives; which further limit the populations (WGFD 2010).

The Colorado River cutthroat trout is the only trout native to the Green and Little Snake river drainages in Wyoming. This subspecies of cutthroat trout is also native to Utah and Colorado. Colorado River cutthroat currently occupy 13 percent of their historcal range in Wyoming (WGFD 2010). The U.S. Fish and Wildlife Service concluded in a 90-day finding in 2004 that the petition did not have sufficient or substantial information to warrant listing.

3 Watershed Inventory

This section of the document presents a brief discussion of water use and availability and an inventory of the existing water uses. Refer to *Draft Feasibility Study Report - New Fork Lake Dam Enlargement, Level II, Phase I Study* (RJH Consultants 2017) for a more detailed treatment of water use and availability.

3.1 Irrigation

There are five irrigation districts in the watershed (New Fork, New Fork Lake, Highland, Fayette and Silver Lake – see **Figure 43**) and 87,659 acres under permit for irrigation in the New Fork River watershed. Of the total, between 65,037 and 78,611 acres are actually irrigated in dry (minimum irrigation) and wet (maximum irrigation) years, respectively (RJH Consultants 2017). The permitted areas are shown in **Figure 44**, overlain by the wet-year irrigated lands. Flood irrigation is by far the most common irrigation method in the watershed (approximately 92 percent), with other methods applied in less than 8 percent of the total irrigated area (**Table 22** and **Figure 45**).

New Fork River Water Right & Conveyance Mapping Tool

As part of this Level I Watershed Study, Tetra Tech, Inc., in association with Rio Verde Engineers, developed a GIS tool to provide watershed stakeholders with easy access to water rights information in the New Fork River watershed. Appendix L provides a description and user's guide for the New Fork River Water Right & Conveyance Mapping Tool ("**New Fork WRCMT**"). Access to this tool can be obtained by contacting the Sublette County Conservation District.

The primary points of diversion and associated conveyance system are shown in **Figure 46**. The majority of the irrigation water is conveyed in open channels (**Table 23**). Two cross-basin diversions are present in the New Fork River watershed; both augment flows in the west fork of the New Fork (**Figure 46**). The first is a diversion from Boulder Creek (a tributary to the Green River) in District 11 through the Ballou-Plank Ditch. The second cross-basin diversion is an incidental transfer due to return flows from Canyon Ditch, which diverts from the Green River to the headwaters of Little Duck Creek.

Additional detail regarding the primary points of diversion and associated conveyance systems is provided in Appendix L – Mapping and Describing Water Conveyance in the New Fork River Watershed.

Table 22. Permitted, wet and dry year irrigated acreage

TYPE	ACRES	
	DRY YEAR	WET YEAR
Flood Irrigation	60,050	73,382
Improved Irrigation	1,919	2,088
Nontypical Irrigation	1,452	1,522
Pivot Field	1,616	1,619
Total	***65,037***	***78,611***

Notes: Improved irrigation include areas with evidence of leveling and intensive management, including wheel-line, set sprinklers, and gated pipe. Nontypical irrigation includes areas that receive sporadic irrigation, ditch-supplied pond systems, or are located within urbanizing areas.

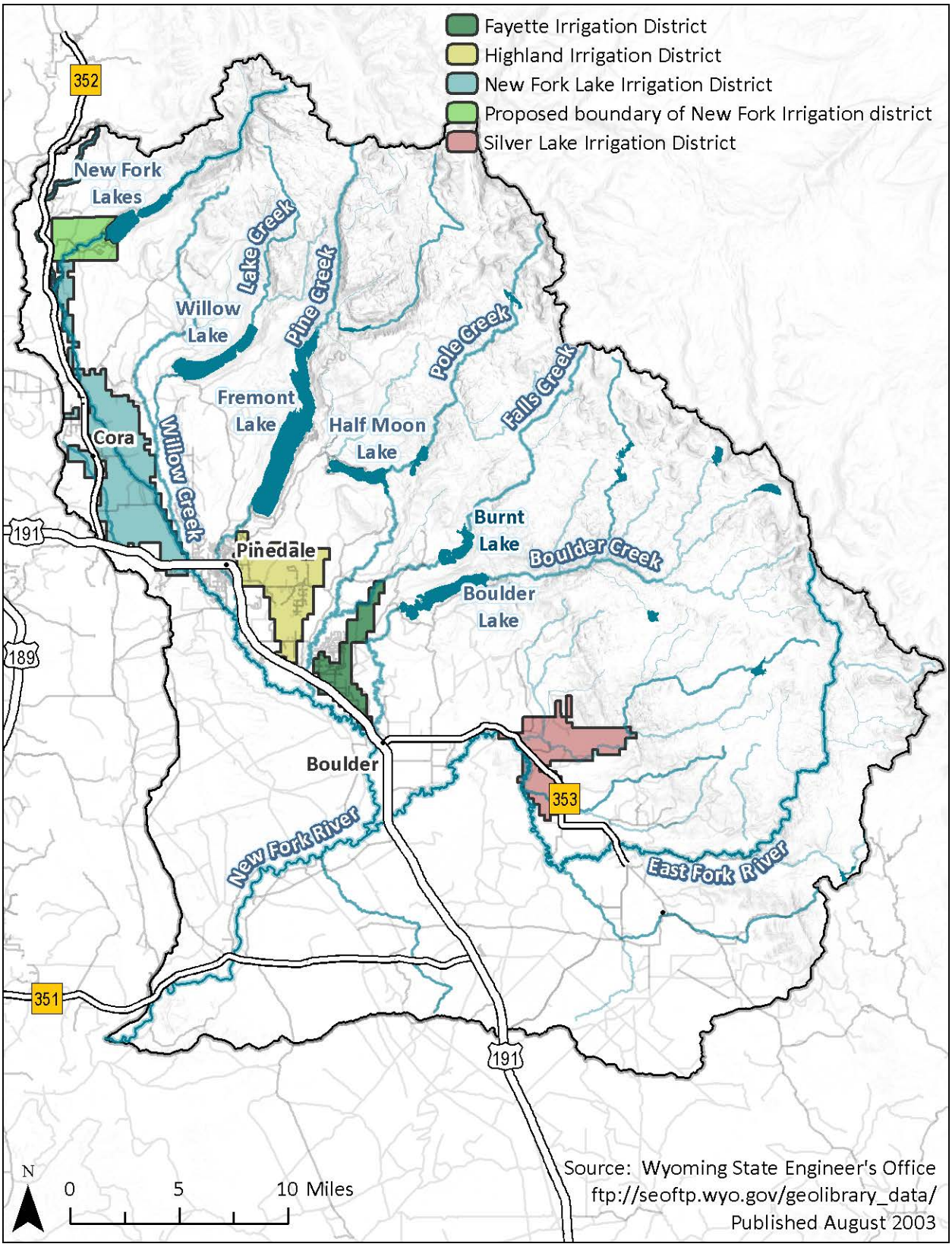

Figure 43. Irrigation districts in the New Fork River watershed.

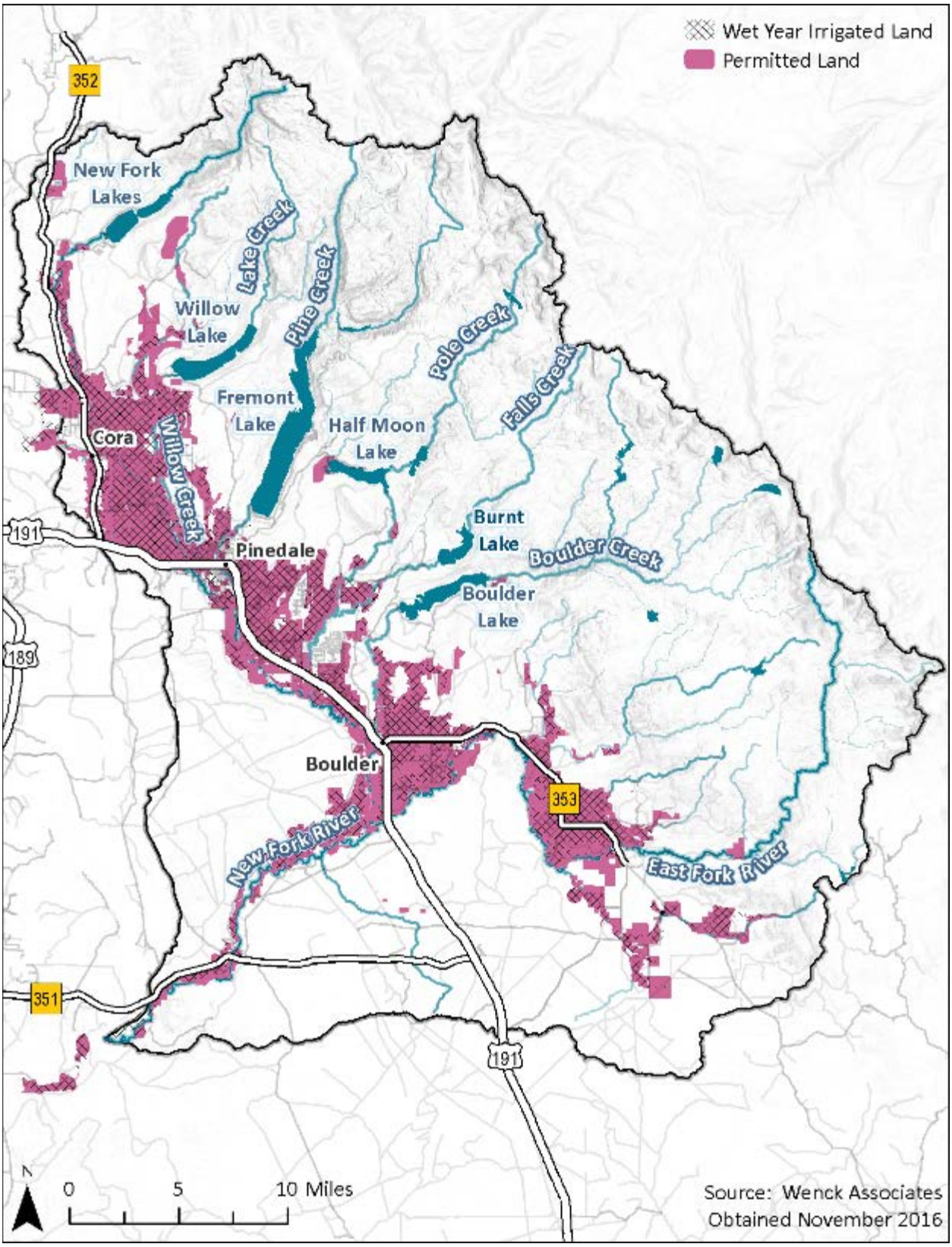

Figure 44. Permitted and wet year irrigated lands in the New Fork River watershed.

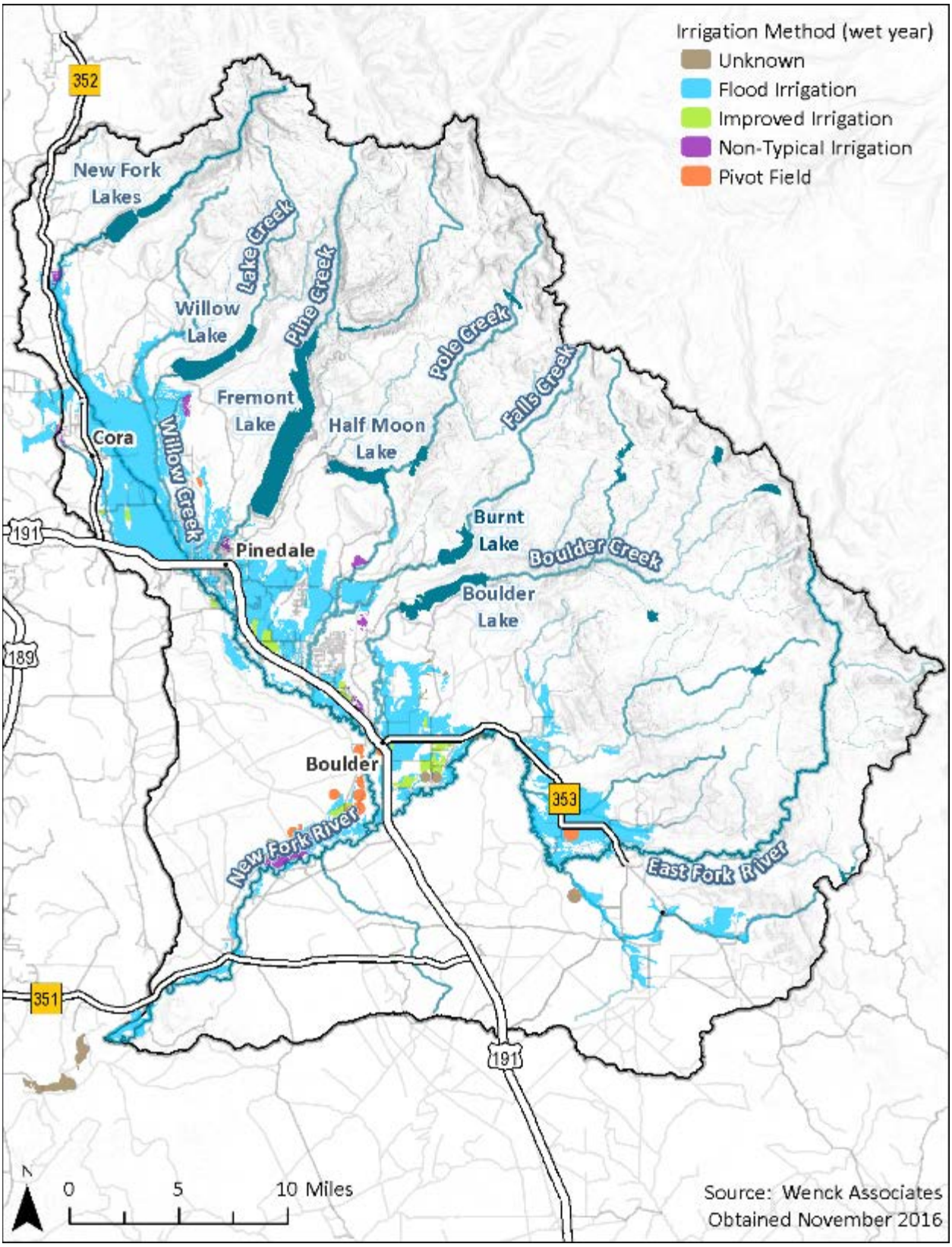

Figure 45. Irrigation method (wet year) in the New Fork River watershed.

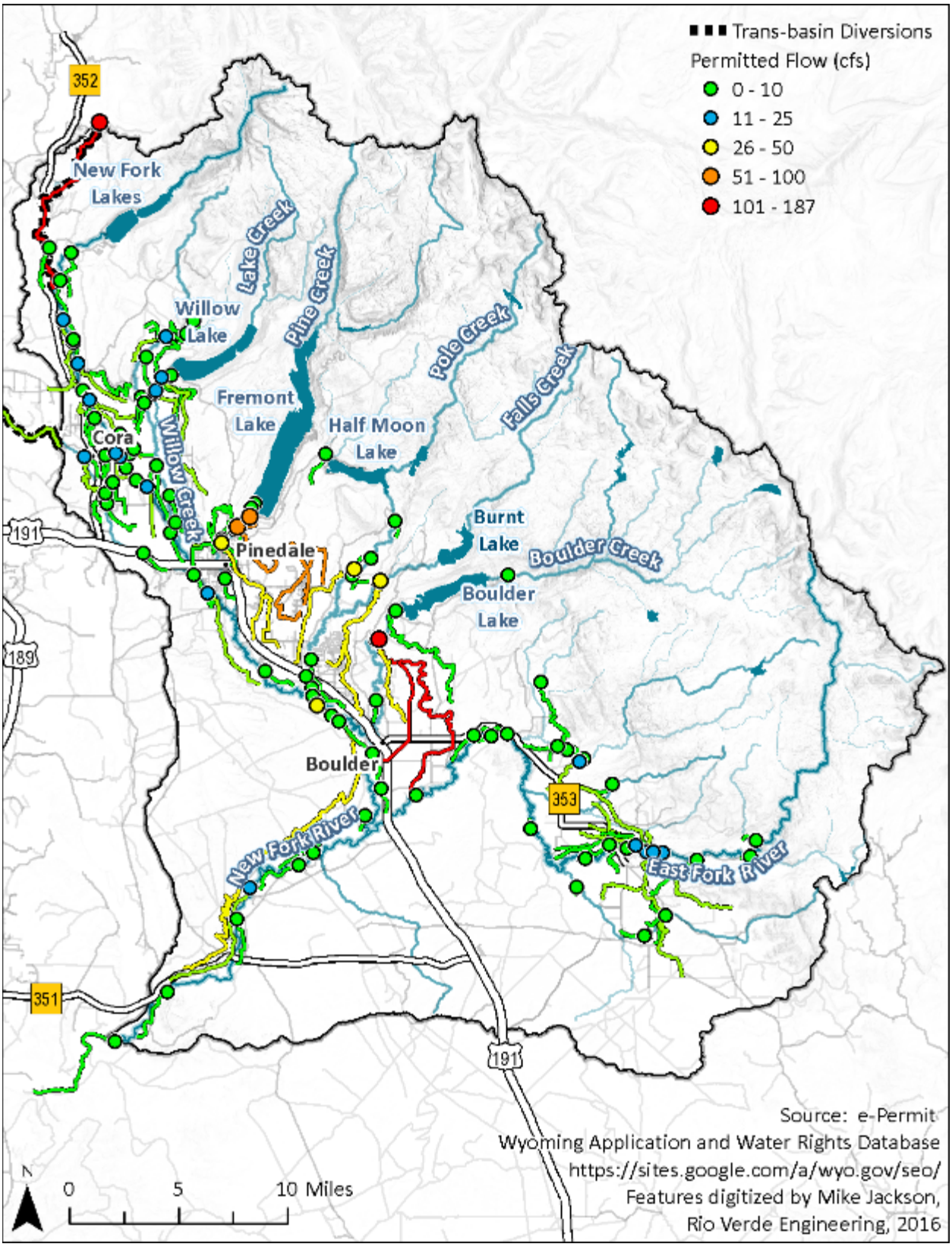

Figure 46. Irrigation network showing permitted flows in the New Fork River watershed.

Table 23. Points of diversion, conveyances and permitted flows

NAME	DIVERSION TYPE	CONVEYANCE TYPE	PERMITTED FLOW (CFS)
A. Butler Ditch	Headgate	Open Channel	2.47
Albion Ditch	Headgate	Open Channel	9.02
Apex Ditch	Headgate	Open Channel	11.52
Auer Ditch	Headgate	Open Channel	1.93
Bair Ditch	Headgate	Open Channel	3.95
Ballou-Plank Ditch	Headgate	Open Channel	187.19
Ballou Ditch	Headgate	Open Channel	9.35
Banes No. 1 Ditch	Headgate	Open Channel	9.07
Bee Line Ditch	Headgate	Open Channel	23.54
Belknap & Noble Ditch	Headgate	Open Channel	12.31
Belknap No. 1 Ditch	Headgate	Open Channel	2.62
Belknap No. 2 Ditch	Headgate	Open Channel	4.57
Benson Ditch	Headgate	Open Channel	0.71
Bernice Ditch	Headgate	Open Channel	2.35
Bertram Ditch	Headgate	Open Channel	14.79
Best Flume Ditch	Headgate (Power Generation)	Open Channel	53.75
Binning No. 1 Ditch	Headgate	Open Channel	3.29
Binning No. 2 Ditch	Headgate	Open Channel	4.34
Binning No. 3 Ditch	Headgate	Open Channel	17.32
Black Ditch	Headgate	Open Channel	1.45
Boulder Canal (Oliver Ditch)	Headgate	Open Channel	107.31
Boulder Canal (Oliver Ditch)	Headgate	Open Channel	107.31
Boulter Ditch	Headgate, Pump (20 hp)	Open Channel, Pipeline (8 in dia. x 1200 ft)	6.08
Brandt Ditch	Headgate	Open Channel	5.67
Burkhalter Ditch	Headgate	Open Channel	42.24
Colorado Ditch	Headgate	Open Channel	11.78
Converse Ditch	Headgate	Open Channel	23.45
Crawford Ditch	Headgate	Open Channel	9.62
Densley-Merritt Ditch	Headgate	Open Channel	5.80
East Fork Ditch	Headgate	Open Channel	15.83
East Transmission Line	Pipeline Intake (Original: 16 in dia., Second: 36 in dia.)	24 in dia. - 12000 ft	1.92
Ec Walker Ditch	Headgate	Open Channel	2.70
Ecklund Ditch	Headgate	Open Channel	1.06
Enlarged Boulter No. 2 Ditch	Headgate	Open Channel	4.54
Enlarged Overland Ditch	Headgate	Open Channel	22.13

NAME	DIVERSION TYPE	CONVEYANCE TYPE	PERMITTED FLOW (CFS)
Fall Creek No. 2 Ditch	Headgate	Open Channel	5.32
Fayette Canal	Headgate	Open Channel	30.29
Fremont Ditch	Headgate	Open Channel	7.41
Gail No. 1 Ditch	Headgate	Open Channel	2.49
Gail No. 2 Ditch	Headgate	Open Channel	10.28
Geneva Ditch	Headgate	Open Channel	<Null>
Genoa Ditch	Headgate	Open Channel	2.55
Gilligan And Iwan Ditch	Headgate	Open Channel	13.57
Graham Ditch	Headgate	Open Channel	1.85
Griffin No. 2 Ditch	Headgate	Open Channel	4.406
Half Moon Ditch	Headgate	Open Channel	2.97
Hande No. 3 Ditch	Headgate	Open Channel	2.28
Hanna No. 2 Ditch	Headgate	Open Channel	5.01
Hansen-Luce Ditch	Headgate	Open Channel	2.21
High Line Ditch	Headgate	Open Channel	19.67
Highland Canal	Headgate	Open Channel	82.68
Hittle No. 1 Ditch	Headgate	Open Channel	1.13
Hoff No. 1 Ditch	Headgate	Open Channel	4.68
Island Ditch	Headgate	Open Channel	3.72
J T Orcutt Ditch	Headgate	Open Channel	4.32
Jaycox No. 1 Ditch	Headgate	Open Channel	3.86
Jenkins Ditch	Headgate	Open Channel	21.17
Jim Williams Ditch	Headgate	Open Channel	2.13
Jones Sprinkler Irrigation System	Pump (66 hp)	Pipeline (12 in dia. x 2302 ft)	3.08
Jorgensen-Boyce Ditch	Headgate	Open Channel	4.13
Jorgensen Ditch	Headgate	Open Channel	18.85
Josephine Ditch	Headgate	Open Channel	7.97
King No. 2 Ditch	Headgate	Open Channel	16.38
Lake Creek Ditch	Headgate	Open Channel	3.07
Lake Ditch	Headgate	Open Channel	10.27
Last Chance Ditch	Headgate	Open Channel	0.83
Lee Ditch (Pine Creek Canal No. 1)	Headgate	Open Channel	49.14
Lizzie Lozier Ditch	Headgate	Open Channel	6.45
Lizzie Lozier Ditch	Headgate	Open Channel	6.45
Lone Pine Ditch	Headgate	Open Channel	6.57
Louis Ditch	Headgate	Open Channel	4.07
Luman Ditch	Headgate	Open Channel	4.57
Luman No. 2 Ditch	Headgate	Open Channel	0.56

NAME	DIVERSION TYPE	CONVEYANCE TYPE	PERMITTED FLOW (CFS)
Mcdonough No. 1 Ditch	Headgate	Open Channel	4.00
Mcdowell Ditch	Headgate	Open Channel	3.91
Mckinley Ditch	Headgate	Open Channel	6.27
Merrick Ditch	Headgate	Open Channel	9.40
Metz Ditch	Headgate	Open Channel	1.37
Meyers Ditch	Headgate	Open Channel	4.48
Mitchell Ditch	Headgate	Open Channel	0.19
New Fork Ditch	Headgate	Open Channel	5.98
Nichols Pipeline	Headgate	8 in dia. Pipeline	0.91
Number One Ditch	Headgate	Open Channel	0.81
Oliver Orcutt Ditch	Headgate	Open Channel	1.44
Paradise Canal	Headgate	Open Channel	43.10
Pine Grove Ditch	Headgate	Open Channel	7.29
Pole Creek No. 1 Ditch	Headgate	Open Channel	5.93
Pole Creek No. 2 Ditch	Headgate	Open Channel	25.24
Pope Ditch	Headgate	Open Channel	7.54
Postal (Postel) Ditch	Headgate	Open Channel	4.92
Priddy Ditch	Headgate	Open Channel	4.25
Rahm Ditch	Headgate	Open Channel	5.18
Reynolds-McNish Ditch	Headgate	Open Channel	1.58
Reynolds Ditch	Headgate	Open Channel	5.53
Rocky Mountain Ditch	Headgate	Open Channel	18.11
Rosewald Ditch	Headgate	Open Channel	2.06
Routh Ditch	Headgate	Open Channel	9.96
Sampson Ditch	Headgate	Open Channel	5.17
Seabolt East Side Ditch	Headgate	Open Channel	5.53
Sill Ditch	Headgate	Open Channel	19.90
Silver Ditch	Headgate	Open Channel	2.28
Stadin No. 1 Ditch	Headgate	Open Channel	4.35
Stadin No. 2 Ditch	Headgate	Open Channel	1.18
Steele Ditch	Headgate	Open Channel	1.66
Steele No. 2 Ditch	Headgate	Open Channel	1.00
Stipa Ditch	Headgate	Open Channel	1.58
Supply And South Side Ditch	Headgate	Open Channel	1.92
Supply And South Side Ditch	Headgate	Open Channel	1.92
Surveyor Ditch	Headgate	Open Channel	5.58
Swamp Ditch	Headgate	Open Channel	3.81
Tanglefoot Ditch	Headgate	Open Channel	8.48

NAME	DIVERSION TYPE	CONVEYANCE TYPE	PERMITTED FLOW (CFS)
Thompson Ditch	Headgate	Open Channel	1.26
Tibbals Ditch	Headgate	Open Channel	20.65
Tyler Ditch	Headgate	Open Channel	1.60
Ulrica Ditch	Headgate	Open Channel	12.98
Wardell Ditch	Headgate	Open Channel	8.09
Weiss Ditch	Headgate	Open Channel	4.56
West Fork Irrigating Ditch	Headgate	Open Channel	13.30
West Transmission Line	Pipeline Intake (Original: 16 in dia., Second: 36 in dia.)	30 in dia. - 6700 ft => 24 in dia. - 10400 ft	1.92
Willow Glen Ditch	Headgate	Open Channel	13.395
Willow Lake Ditch	Headgate	Open Channel	4.16
Willow Lake Ditch	Headgate	Open Channel	4.16
Wolf Ditch	Headgate	Open Channel	3.52
Wright Ditch	Headgate	Open Channel	13.46

Notes: cfs = cubic feet per second; in = inch; dia = diameter; ft = feet; hp = horsepower

3.1.1 Water Use and Availability

A StateMod model was developed as a part of the *New Fork Dam Enlargement Study* (RJH Consultants 2017). Several scenarios of the New Fork StateMod model were developed to identify shortages, water availability, and irrigation efficiency improvements in the watershed:

- **Baseline Scenario** represents current conditions (currently irrigated acreage) and operations in the watershed and determines water shortages and availability based on current conditions.
- **Permitted Baseline Scenario** represents irrigation of all permitted acreage in the watershed and determines water shortages and availability.
- **Improved Irrigation Conveyance Efficiency** represents conversion to lined/piped ditches.
- **Improved Irrigation Application Efficiency** represents conversion from flood irrigation to sprinkler application.
- **Improved Irrigation Application and Conveyance Efficiency** represents conversion to both sprinkler application and lined/piped ditches.
- **New Fork Lake Enlargement** represents enlargement of New Fork Lake for agricultural use.

The results of the Permitted Baseline Scenario (the most conservative in terms of overall potential water shortages) are summarized herein. The basin operates as a water-short system under this scenario. **Figure 47** indicates the average shortage in the watershed. Refer to the *Feasibility Study Report – New Fork Lake Dam Enlargement, Level II, Phase I Study Project* (RJH Consultants 2017) for a more detailed presentation of the results.

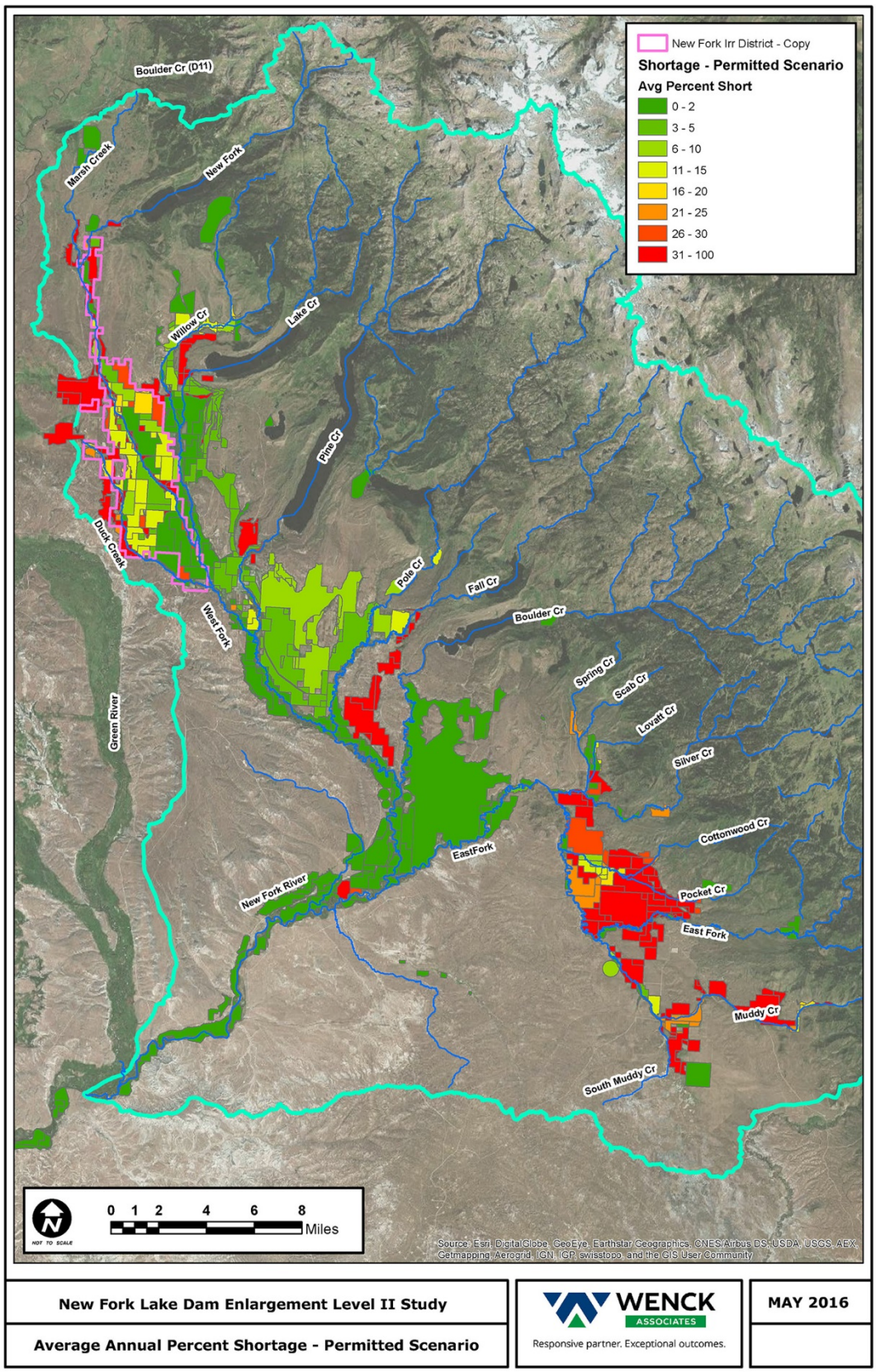

Figure 47. Average annual percent shortage – permitted scenario.

3.2 Municipal Systems

The city of Pinedale obtains their drinking water from Fremont Lake. Raw water is piped from an intake 900 feet from the lake shore and 120 feet below the surface of the lake to the treatment plant near the south shore of the lake (personal communication, Jake Crosby, EPA Region 8, Drinking Water Unit B, March 2, 2017). At the treatment plant, the water is treated by ultraviolet disinfection, sodium hypochlorite, and a sodium-silicate corrosion inhibitor. After treatment the water flows by gravity through one of two transmission lines to distribution. The conveyance system is shown in **Figure 48**.

3.3 Wildlife/Livestock Watering Opportunities Inventory

The New Fork River watershed study area supports numerous grazing allotments on BLM- and USFS-administered land (refer to Section 2.1.7). These allotments are generally adjacent to privately held ground and serve as summer and early fall range for the adjacent ranches. Extensive work has been done within the watershed to provide upland water sources for livestock and wildlife. Abundant natural water features also provide similar services.

There are 340 wells and springs permitted by the Wyoming State Engineer's Office (SEO) for stock water use[3] (**Figure 49)** and 49 SEO-permitted stock reservoirs[4] within the watershed (**Figure 50** and **Table 24**).

[3] Information obtained from the Wyoming SEO Wells Shapefiles. https://sites.google.com/a/wyo.gov/seo/documents-data/maps-and-spatial-data. Accessed July 27, 2017.

[4] Information obtained through the SEO e-Permit system. http://seoweb.wyo.gov/e-Permit/Common/Home.aspx

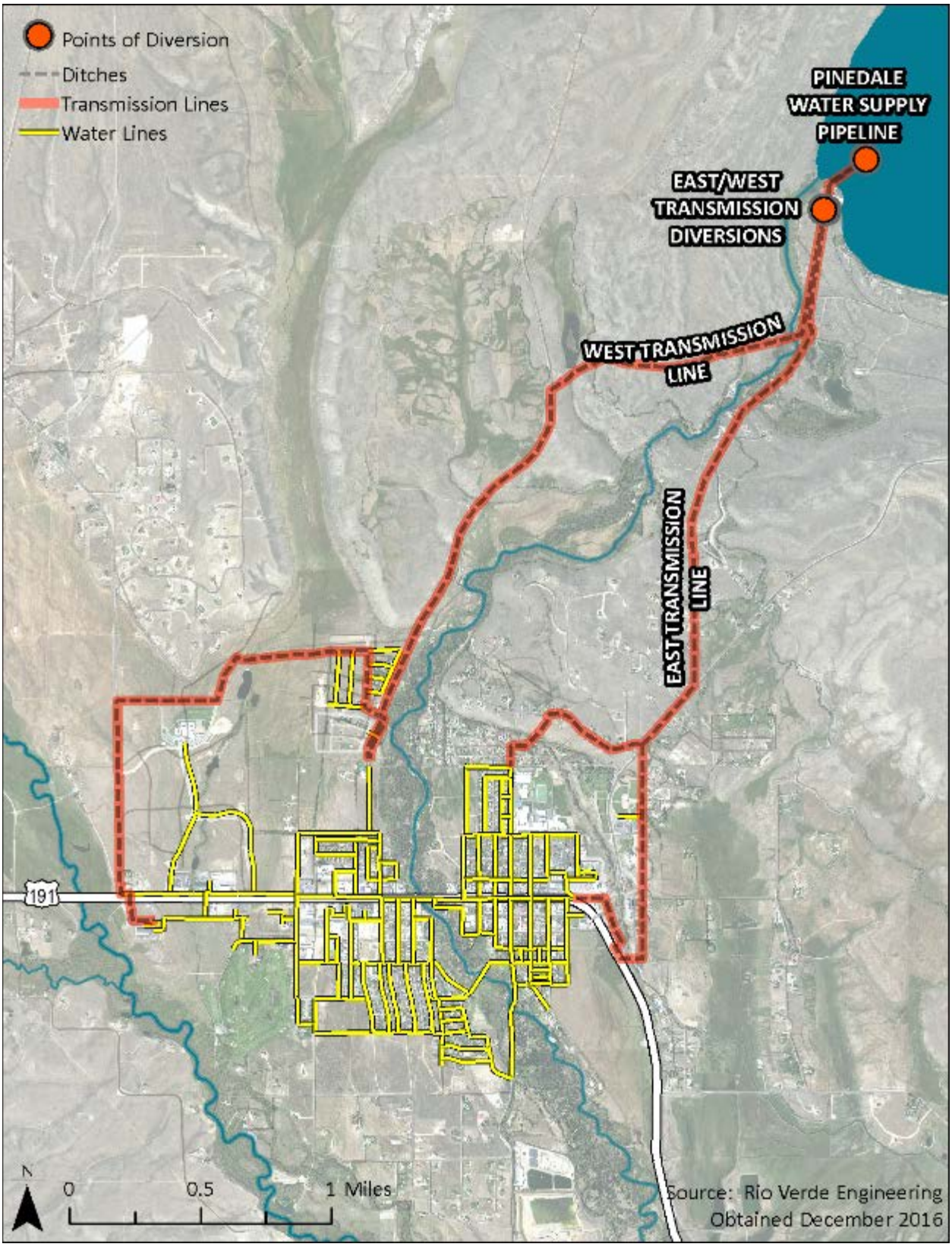

Figure 48. City of Pinedale municipal water system.

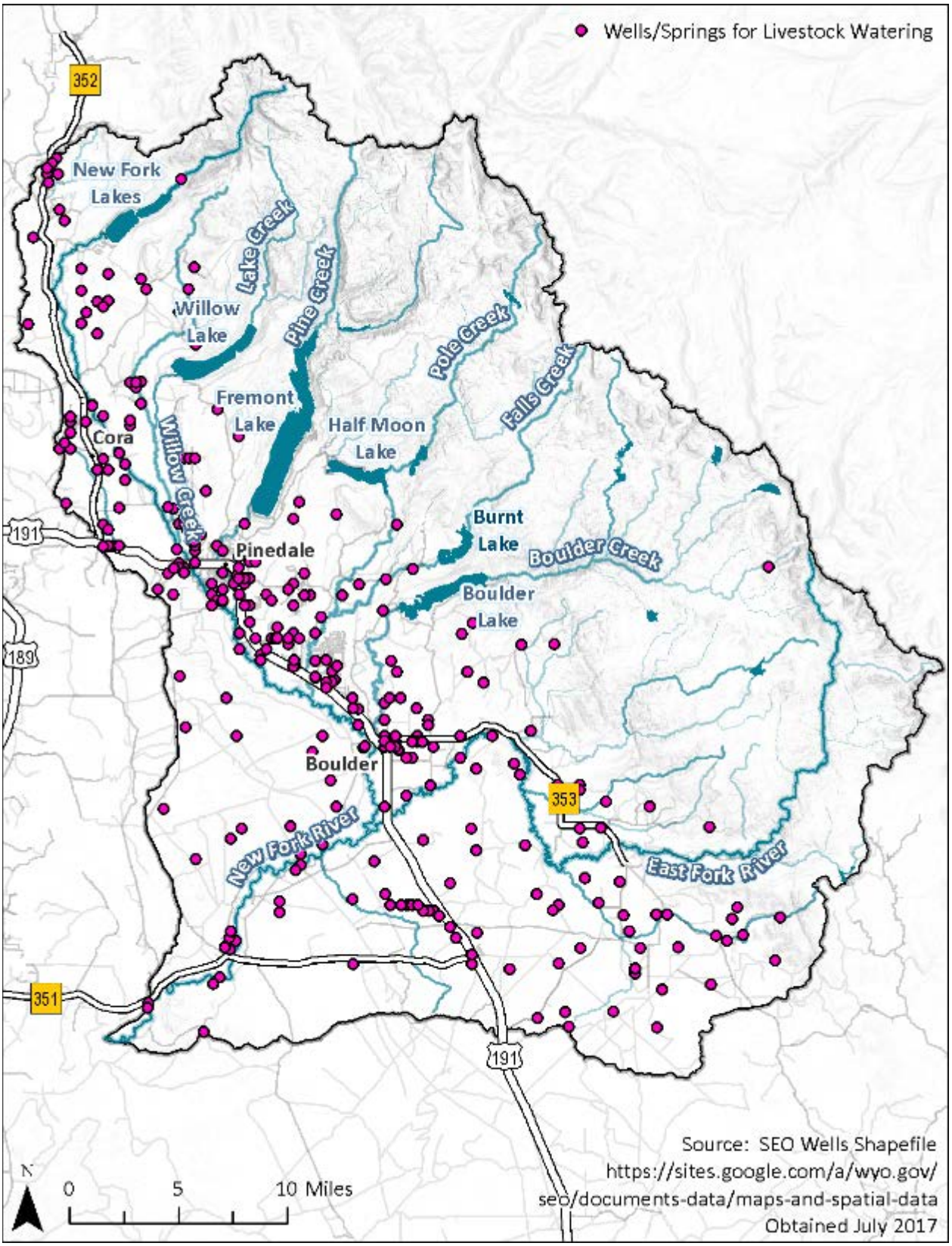

Figure 49. Existing wells and springs permitted for livestock watering.

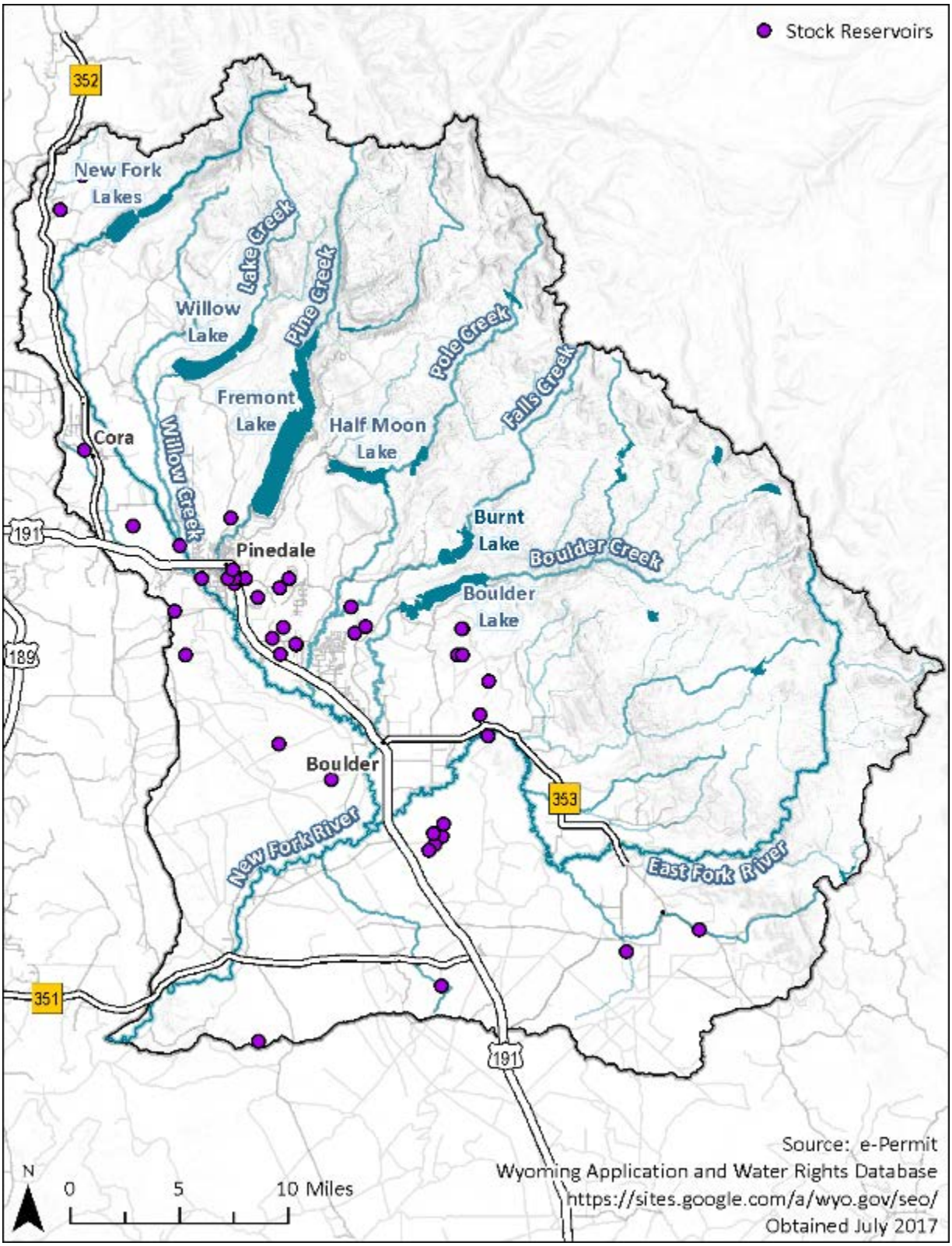

Figure 50. Stock reservoirs permitted by the Wyoming State Engineer's Office.

Table 24. Stock reservoirs in the New Fork watershed

WR NUMBER	FACILITY NAME	TOTAL CAPACITY (AF/YR)	SIZE (AF)
P10050.0S	Antelope Draw Stock Reservoir	0	0
P10165.0S	Fenn #1 Stock Reservoir	3.42	0
P10277.0S	Antelope Draw Stock Reservoir	18.7	0
P10465.0S	Desert No. 2 Stock Reservoir	3.07	3.07
P10467.0S	Mesa No. 1 Stock Reservoir	8.51	8.51
P11645.0S	Withers Stock Reservoir	0	0
P11772.0S	Sage-10 Stock Reservoir	0	0
P11778.0S	Denney Stock Reservoir	0.48	0.48
P12071.0S	Harrower No. 1 Stock Reservoir	1.2	1.2
P12072.0S	Harrower No. 2 Stock Reservoir	0.89	0.89
P12083.0S	Wishbone Lake Stock Reservoir	17.3	17.3
P12084.0S	Little Burnt Lake Stock Reservoir	11.7	11.7
P12110.0S	Pape’s Stock Reservoir	0.83	0.83
P12720.0S	Rawhyde Stock Reservoir	2.55	2.55
P12861.0S	Harrower Horse Barn	0.03	0.03
P12862.0S	Harrower No. 3	1.2	1.2
P12863.0S	Harrower No. 4 Stock Reservoir	0.64	0
P13091.0S	Snyder Stock Reservoir	0.081	0.08
P14797.0S	Cutoff Stock Reservoir	0.33	0.33
P14870.0S	Mud Stock Reservoir	0.48	0.48
P14871.0S	Elk Gulch No. 1 Stock Reservoir	0.08	0.08
P14872.0S	Elk Gulch No. 2 Stock Reservoir	0.11	0.11
P14937.0S	Samiec Stock Reservoir	0	0
P15442.0S	Kylie’s Pool Stock Reservoir	1.11	1.11
P17425.0S	Almquist Stock Reservoir	0.96	0.96
P17650.0S	Bridgette Water Hole Stock Reservoir	0.46	0.46
P5369.0S	Carmichael No. 1 Stock Reservoir	2.22	2.22
P7698.0S	Boulder Lake No. 20 Stock Reservoir	3	3
P7868.0S	Sheffy No. 1	14	14
P7897.0S	East Fork No. 5 Stock Reservoir	2	2
P7898.0S	East Fork No. 6 Stock Reservoir	2	2
P7899.0S	East Fork No. 3 Stock Reservoir	3	3
P7900.0S	East Fork No. 4 Stock Reservoir	3	3
P7905.0S	Cacklin Lou No. 137 Stock Reservoir	4	4
P7910.0S	Bailey No. 216 Stock Reservoir	1.06	1.06
P7913.0S	Upper Boulder No. 305 Stock Reservoir	2	2
P7919.0S	Boulder Lake No. 24 Stock Reservoir	2	2

WR NUMBER	FACILITY NAME	TOTAL CAPACITY (AF/YR)	SIZE (AF)
P7923.0S	Two Buttes No. 285 Stock Reservoir	2	2
P7974.0S	Mining Claim Stock Reservoir	3.47	3.47
P8160.0S	Harry Barker No. 1 Stock Reservoir	2.71	2.71
P9029.0S	Pfisterer Stock Reservoir	3.9	3.9
CR CR18/136	Elk Gulch No. 1 Stock Reservoir	0.08	0
CR CR18/137	Elk Gulch No. 2 Stock Reservoir	0.11	0
CR CR08/326	Boulder Lake No. 24 Stock Reservoir	2	0
CR CR19/183	Mollring Stock Reservoir	0.68	0.68
CR CR21/031	Bridgette Water Hole Stock Reservoir	0.49	0.49
CR CR24/228	Yanish Stock Reservoir	0.46	0.46
P20384.0S	Saxton No. 1	3.63	0
P20458.0S	Fenn Place No. 2	9.26	0

Source: Wyoming State Engineer's Office 2017

3.4 Groundwater Development Inventory

Information regarding the location and characteristics of wells within the watershed was obtained from the Wyoming SEO and the USGS. One USGS well and 2,136 SEO wells were identified within the watershed. Well depths were obtained from the SEO and the USGS, and ranged up to 5,200 feet below ground surface (bgs) with depths typically less than 250 feet near towns and between 250 and 1,000 feet in the southwestern portion of the watershed. Well yields ranged up to 1,261 gallons per minute (gpm), with yields generally less than 50 gpm near towns and between 50 and 250 gpm in the southwestern portion of the watershed. Wells were permitted for the following uses with many permitted for multiple uses:

- Domestic
- Industrial
- Irrigation
- Miscellaneous
- Stock watering
- Groundwater monitoring
- Test wells

The majority of the wells are used for domestic, stock watering, monitoring, and miscellaneous purposes. Near towns, groundwater is generally used for domestic and stock watering purposes, while in the southern portion of the watershed groundwater is primarily used for miscellaneous and stock watering purposes.

Refer to Appendix E – Geology, Aquifers, and Soils Summary for additional detail regarding an inventory of wells and springs and a discussion of groundwater use.

3.5 Water Storage Site Inventory

The identification of potential water storage sites has been the topic of numerous investigations in the New Fork River watershed since the late 1960s. The following were relied upon as a starting point to identify potential reservoir sites:

1. Report on Preliminary Reconnaissance of Potential Reservoirs, Green River Basin, Wyoming (J.T. Banner & Associates, Inc. 1969)
2. Wyoming Water Planning Program, Report No. 3 – Water and Related Land Resources of the Green River Basin, Wyoming (Wyoming State Engineer's Office 1970)
3. Rehabilitation of Fremont Lake Dam (Rio Verde Engineering 1980)
4. Fayette Irrigation District Rehabilitation Project (Rio Verde Engineering 1999)
5. Green River Basin Water Planning Process (States West 2001a)
6. Green River Ground Water Recharge and Alternative Storage, Level 1 Project (States West 2001b)
7. Final Report for the Green River ASR and Alternative Storage Project – Church Reservoir Investigation (States West 2002)
8. Upper Green River Storage, Level II Study (Kleinfelder, Inc. 2007)
9. Green River Basin: Summary of Potential Dam and Reservoir Project Literature (WWDC 2007)
10. Boulter Lake Enlargement, Level II Study (Rio Verde Engineering 2007)
11. Upper Green Watershed Study, Level I (Sunrise Engineering et al. 2014)

According to the Association of State Dam Safety Officials (2017) there are 13 existing large dams/reservoirs in the New Fork River watershed[5].

[5] 25 or more feet tall, and store at least 50 acre-feet of water.

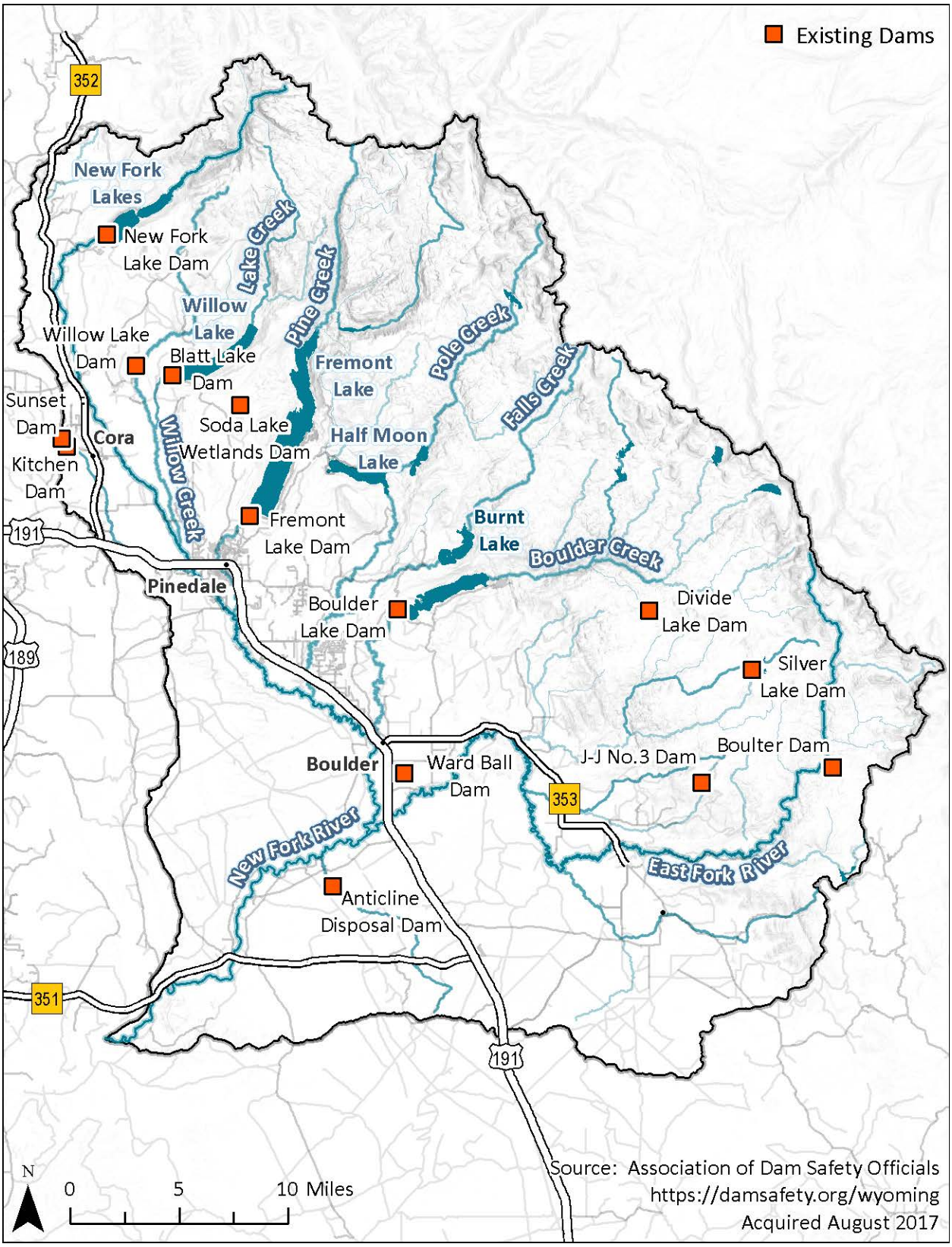

Source: Association of State Dam Safety Officials (2017)

Figure 51. Existing dams in the New Fork River watershed

4 Watershed Management and Rehabilitation Plan

Section 2.0 provided a description of the watershed, including the natural and socioeconomic features relevant to the development of an understanding of how and why the watershed functions as it does. It also provides insight into the features of the watershed that rely upon the waters of the New Fork River watershed, including such things as the agricultural community, drinking water supply, and fish and wildlife. Section 3.0 provides a discussion of water use and availability and an inventory of the existing water uses in the watershed.

The objective of Section 4, the Watershed Management and Rehabilitation Plan, is to use the above information to inform a technically sound, practical in nature, and economically feasible plan to improve water use and function in the New Fork River watershed. This section of the document is divided into two primary sections; one focusing on small water projects (including irrigation, wildlife/livestock water source, small water storage, and stream restoration) and the other on large water storage projects.

4.1 Small Water Projects

Based on direction from the project sponsor, the small water projects component of the plan placed a high priority on working with watershed stakeholders to identify practical watershed improvement projects that had a high likelihood of being funded through the Wyoming Water Development Commission's Small Water Projects Program and would be implemented. Stakeholder interest was very high; 70 improvement projects were brought forward, ranging from diversion structure rehabilitations to streambank restoration projects (**Figure 52**).

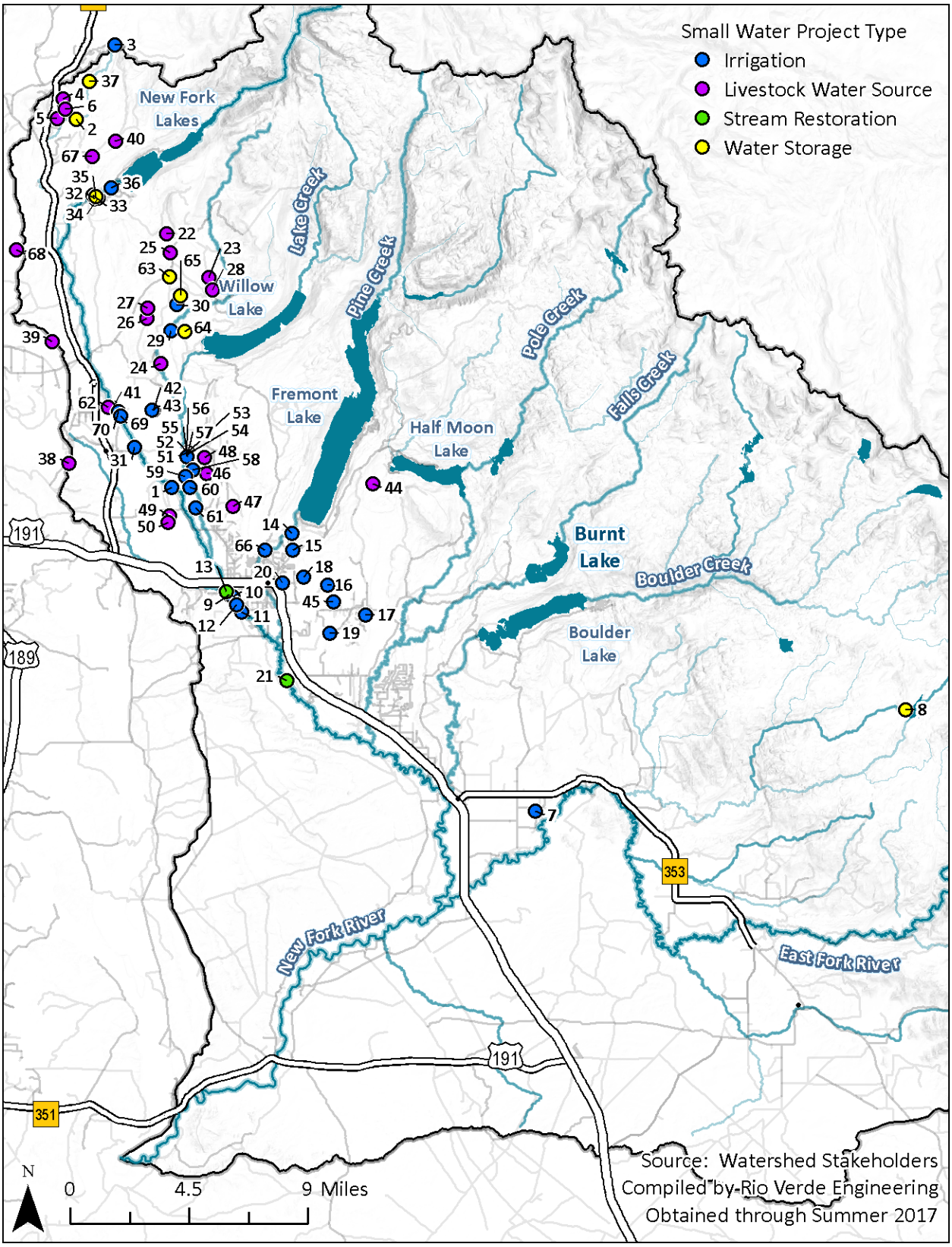

Figure 52. Locations of the 70 small water projects identified by watershed stakeholders.

4.1.1 Small Water Project Evaluation/Prioritization

An evaluation matrix was developed to screen and prioritize the 70 projects and to provide a road map to assist in guiding future decisions in selecting projects for implementation. The evaluation matrix was divided into 14 categories addressing environmental, permitting, funding, technical, and social issues. These factors are presented in **Table 25** and are described in detail, along with the evaluation rationale in Appendix M – Small Water Project Prioritization. The results of the small water project evaluation are presented in **Table 26**. The remainder of Section 4.1 provides descriptions of the projects.

Throughout this study, an emphasis was placed on meeting with stakeholders to discuss proposed small water projects such as stock water well/spring developments, irrigation rehabilitations (conveyance and diversion), and small reservoirs. Meetings and on-site field investigations were completed during September 2016 through July 2017. A total of 70 projects were identified. Of the total, 56 were brought forward for development of conceptual designs, cost estimates, and identification of permit requirements. Projects that were not brought forward for development either did not meet small water project criteria, requested to be dropped by the stakeholder, or ranked very low in the evaluation matrix. These projects vary greatly in scope, projected cost, and geographic location.

Where necessary to provide reasonable estimates and construction quantities, field surveys were performed to gather spatial and elevation data to aid with conceptual designs. The majority of the projects listed in Table 27 were inspected in the field; however, due to stakeholder scheduling conflicts, and an abnormally high water year, some sites were not physically inspected. For these unvisited sites, detailed information from the stakeholder along with aerial imagery and available water rights data from the SEO were used to develop conceptual designs. Appendix N – Conceptual Designs and Cost Estimates – Small Water Projects provides conceptual designs and cost estimates for the 56 projects. These projects are described in the following subsections.

Table 25. Small water project evaluation factors

EVALUATION FACTOR	ENVIRONMENTAL	PERMITABILITY	FUNDABILITY	TECHNICAL	SOCIAL
Land Ownership		✓			✓
Cultural and Historic Resources		✓			
Big Game	✓	✓			
Sensitive Species	✓	✓			
Sage-Grouse	✓	✓			
Fisheries	✓	✓			
Wetland Encroachment	✓	✓			
Wetland Hydrology	✓	✓			
Special Designated Areas	✓	✓			
Shovel-Ready			✓	✓	
Small Water Project Program Priorities			✓	✓	
Sustainability				✓	
Public Acceptability					✓
Overall Watershed Benefit	✓				✓

Table 26. Small water project evaluation matrix results and ranking (listed in rank order)

PROJECT DESCRIPTIONS			EVALUATION FACTORS															
PROJECT #	PROJECT TYPE	NAME	BENEFIT	CULTURAL RESOURCES	BIG GAME	FISHERIES	PUBLIC ACCEPTABILITY	SAGE-GROUSE	SENSITIVE SPECIES	% SHOVEL READY	SPECIAL DESIGNATIONS	SUSTAINABILITY	SMALL WTR. PROJ. PRIORITIES	WETLAND ENCROACHMENT	WETLAND HYDROLOGY	TOTAL SCORE	MODIFIED SCORE [1]	RANK
32	Water Storage	Martin Reservoir (Irrigation)	1	10	1	10	5	10	5	100	10	9	40	10	10	211	211	1
33	Water Storage	Valerie Reservoir (Irrigation)	1	10	1	10	5	10	5	100	10	9	40	10	10	211	211	1
34	Water Storage	Susan Reservoir (Irrigation)	1	10	1	10	5	10	5	100	10	9	40	10	10	211	211	1
35	Water Storage	Annette Reservoir (Irrigation)	1	10	1	10	5	10	5	100	10	9	40	10	10	211	211	1
1	Irrigation	Bee Line Ditch POD Rehabilitation	8	10	1	6	5	1	5	100	10	8	20	1	10	175	175	5
39	Wildlife/Livestock Water Source	Thompson Butte Stockwater Well Development (AKA CL Bar Ranch Stockwater Well "B")	1	10	10	10	5	10	10	10	10	8	50	10	10	144	144	6
42	Wildlife/Livestock Water Source	Marshal Bump Stockwater Well Development	1	10	10	10	5	1	5	10	10	8	50	10	10	130	130	7
44	Wildlife/Livestock Water Source	Brosman No. 2 Stockwater Well Development	1	10	1	10	5	10	5	10	10	8	50	10	10	130	130	7
46	Wildlife/Livestock Water Source	Coleman Pasture Stockwater Tank & Pipeline	1	10	10	10	5	1	5	10	10	7	50	10	10	129	129	9
47	Wildlife/Livestock Water Source	No Man's Land Stockwater Tank & Pipeline	1	10	10	10	5	1	5	10	10	7	50	10	10	129	129	9
15	Irrigation	Highland Ditch Seepage Area "B"	8	10	10	10	5	10	5	10	5	8	30	10	8	121	121	11
23	Wildlife/Livestock Water Source	Welborn Smith No. 1 Stockwater Well Rehabilitation	1	10	1	10	5	1	5	10	10	8	50	10	10	121	121	11
38	Wildlife/Livestock Water Source	Cora Butte Stockwater Well Development (AKA CL Bar Ranch Stockwater Well "A")	1	10	1	10	5	1	5	10	10	8	50	10	10	121	121	11
40	Wildlife/Livestock Water Source	McDowell Flats Stockwater Well Development	1	10	1	10	5	10	5	10	10	8	50	1	10	121	121	11

PROJECT DESCRIPTIONS			EVALUATION FACTORS															
PROJECT #	PROJECT TYPE	NAME	BENEFIT	CULTURAL RESOURCES	BIG GAME	FISHERIES	PUBLIC ACCEPTABILITY	SAGE-GROUSE	SENSITIVE SPECIES	% SHOVEL READY	SPECIAL DESIGNATIONS	SUSTAINABILITY	SMALL WTR. PROJ. PRIORITIES	WETLAND ENCROACHMENT	WETLAND HYDROLOGY	TOTAL SCORE	MODIFIED SCORE [1]	RANK
26	Wildlife/Livestock Water Source	Dumphy Hollow Spring Development (Stockwater)	1	10	1	10	5	1	5	10	10	7	50	10	10	120	120	15
27	Wildlife/Livestock Water Source	Noble Place Spring Development (Stockwater)	1	10	1	10	5	1	5	10	10	7	50	10	10	120	120	15
62	Water Storage	Lower State Reservoirs (project includes 3 separate similar reservoirs)	1	10	1	10	5	1	5	10	10	7	50	10	10	120	120	15
64	Water Storage	T Pasture Reservoir	1	10	1	10	5	10	5	10	10	8	40	10	10	120	120	15
14	Irrigation	Highland Ditch Seepage Area “A”	8	10	1	10	5	10	5	10	10	8	30	10	8	117	117	19
16	Irrigation	Highland Ditch Seepage Area “C”	7	10	1	10	5	10	5	10	10	8	30	10	8	116	117	19
17	Irrigation	Highland Ditch Seepage Area “D”	7	10	10	10	5	1	5	10	10	8	30	10	8	116	117	19
18	Irrigation	Highland Ditch Check Structure Rehabilitation “A”	8	10	10	10	5	10	5	10	10	7	20	10	10	115	117	19
19	Irrigation	Highland Ditch Check Structure Rehabilitation “B”	7	10	10	10	5	10	5	10	10	7	20	10	10	114	117	19
37	Water Storage	Kaylou Stock Reservoir Outlet Works Rehabilitation	1	10	1	10	5	10	10	10	10	9	40	1	10	117	117	19
67	Wildlife/Livestock Water Source	Burgess Stockwater Well	1	10	1	10	5	10	5	10	10	3	50	1	10	116	116	25
4	Wildlife/Livestock Water Source	Ingle Stockwater Well Development	1	10	1	10	5	1	5	10	10	8	50	1	10	112	112	26
5	Wildlife/Livestock Water Source	Hedrick Stockwater Well Development	1	10	1	10	5	1	5	10	10	8	50	1	10	112	112	26
6	Wildlife/Livestock Water Source	Anselmi Stockwater Well Development	1	10	1	10	5	1	5	10	10	8	50	1	10	112	112	26
22	Wildlife/Livestock Water Source	Shriver #2 Stockwater Well Rehabilitation	1	10	1	10	5	1	5	10	10	8	50	1	10	112	112	26

PROJECT DESCRIPTIONS			EVALUATION FACTORS															
PROJECT #	PROJECT TYPE	NAME	BENEFIT	CULTURAL RESOURCES	BIG GAME	FISHERIES	PUBLIC ACCEPTABILITY	SAGE-GROUSE	SENSITIVE SPECIES	% SHOVEL READY	SPECIAL DESIGNATIONS	SUSTAINABILITY	SMALL WTR. PROJ. PRIORITIES	WETLAND ENCROACHMENT	WETLAND HYDROLOGY	TOTAL SCORE	MODIFIED SCORE [1]	RANK
24	Wildlife/Livestock Water Source	Horse Corral #1 Stockwater Well Rehabilitation	1	10	1	10	5	1	5	10	10	8	50	1	10	112	112	26
25	Wildlife/Livestock Water Source	Welborn #1 Well Rehabilitation	1	10	1	10	5	1	5	10	10	8	50	1	10	112	112	26
12	Irrigation	Stipa Ditch Sluffing Area Mitigation	5	10	1	10	5	10	5	10	10	9	30	1	10	106	111	32
28	Wildlife/Livestock Water Source	Smith Place Spring Development (Stockwater)	1	10	1	10	5	1	5	10	10	7	50	1	10	111	111	32
48	Wildlife/Livestock Water Source	Coleman Field Spring Development (Stockwater)	1	10	1	10	5	1	5	10	10	7	50	1	10	111	111	32
49	Wildlife/Livestock Water Source	Miller Field Stockwater Tanks & Pipelines	1	10	1	10	5	1	5	10	10	7	50	1	10	111	111	32
65	Water Storage	Seedings Reservoir	1	10	1	10	5	1	5	10	10	8	40	10	10	111	111	32
36	Irrigation	New Fork No. 2 Ditch Piping	1	10	1	6	5	10	5	10	10	5	30	10	3	103	103	37
66	Irrigation	Orcutt Ditch - Change of POD	8	10	10	6	5	10	5	10	10	8	20	1	10	103	103	37
11	Irrigation	Stipa Ditch Seepage Area Mitigation	5	10	1	10	5	10	5	10	5	6	30	1	8	98	101	39
10	Irrigation	Stipa Ditch Overflow Diversion Rehabilitation	5	10	1	10	5	10	5	10	10	7	20	1	10	94	99	40
43	Wildlife/Livestock Water Source	Well Power Supply Rehabilitation	1	10	10	10	5	1	5	10	10	5	30	1	10	98	98	41
63	Water Storage	Dumpy Reservoirs (includes 5 separate, similar reservoirs)	1	10	1	6	5	1	5	10	10	8	40	1	10	98	98	42
9	Irrigation	Stipa Ditch POD Rehabilitation	5	10	1	6	5	10	5	10	10	8	20	1	10	91	96	43
31	Irrigation	Converse Ditch Rehabilitation	8	10	1	8	5	1	5	10	10	8	20	10	10	96	96	43
3	Irrigation	Preston Ditch Rehabilitation	3	10	1	10	5	1	5	10	10	6	30	1	10	92	92	45

PROJECT DESCRIPTIONS			EVALUATION FACTORS															
PROJECT #	PROJECT TYPE	NAME	BENEFIT	CULTURAL RESOURCES	BIG GAME	FISHERIES	PUBLIC ACCEPTABILITY	SAGE-GROUSE	SENSITIVE SPECIES	% SHOVEL READY	SPECIAL DESIGNATIONS	SUSTAINABILITY	SMALL WTR. PROJ. PRIORITIES	WETLAND ENCROACHMENT	WETLAND HYDROLOGY	TOTAL SCORE	MODIFIED SCORE [1]	RANK
50	Wildlife/Livestock Water Source	Miller Field Stockwater Well Rehabilitation (Solar Conversion)	1	10	1	10	5	1	5	10	10	6	30	1	10	90	90	46
29	Irrigation	E.C. Walker Ditch POD Rehabilitation	8	10	1	6	5	1	5	10	10	8	20	1	10	85	85	47
41	Irrigation	Strong Ditch POD Rehabilitation	8	10	1	6	5	1	5	10	10	8	20	1	10	85	85	47
2	Irrigation	Mommy Moose Ditch Diversion Rehabilitation (AKA Marsh Creek Ditch POD Rehab)	1	10	1	10	5	10	5	10	5	6	20	1	10	84	84	49
51	Irrigation	Glover Field Headgate 1	1	10	1	10	5	1	5	10	10	8	20	1	10	82	82	50
52	Irrigation	Glover Field Headgate 2	1	10	1	10	5	1	5	10	10	8	20	1	10	82	82	50
53	Irrigation	Glover Field Headgate 3	1	10	1	10	5	1	5	10	10	8	20	1	10	82	82	50
54	Irrigation	Glover Field Headgate 4	1	10	1	10	5	1	5	10	10	8	20	1	10	82	82	50
55	Irrigation	Glover Field Headgate 5	1	10	1	10	5	1	5	10	10	8	20	1	10	82	82	50
56	Irrigation	Glover Field Headgate 6	1	10	1	10	5	1	5	10	10	8	20	1	10	82	82	50
57	Irrigation	Glover Field Headgate 7	1	10	1	10	5	1	5	10	10	8	20	1	10	82	82	50
58	Irrigation	Section 7 (34-109) Diversion Control Structure Rehab	1	10	1	10	5	1	5	10	10	8	20	1	10	82	82	50
60	Irrigation	Section 18 (34-109) Rock Vein Check Structure Rehab	1	10	1	10	5	1	5	10	10	8	20	1	10	82	82	50
61	Irrigation	Section 19 (34-109) Diversion Control Structure Rehab	1	10	1	10	5	1	5	10	10	8	20	1	10	82	82	50
69	Irrigation	Alexander Ditch POD Check Structure Rehab	5	10	1	6	5	1	5	10	10	8	20	1	10	82	82	60
70	Irrigation	New Fork Primary Check Structure Rehab	5	10	1	6	5	1	5	10	10	8	20	1	10	82	82	60

PROJECT DESCRIPTIONS			EVALUATION FACTORS															
PROJECT #	PROJECT TYPE	NAME	BENEFIT	CULTURAL RESOURCES	BIG GAME	FISHERIES	PUBLIC ACCEPTABILITY	SAGE-GROUSE	SENSITIVE SPECIES	% SHOVEL READY	SPECIAL DESIGNATIONS	SUSTAINABILITY	SMALL WTR. PROJ. PRIORITIES	WETLAND ENCROACHMENT	WETLAND HYDROLOGY	TOTAL SCORE	MODIFIED SCORE [1]	RANK
30	Irrigation	"The Seedings Meadow" Irrigation Conveyance Rehabilitation	1	10	1	10	5	1	5	10	10	7	20	1	10	81	81	62
13	Stream Restoration	Duck Creek Bank Stabilization (AKA Flooding Mitigation for Stipa Ditch)	5	10	1	1	5	10	5	10	10	7	10	1	10	75	80	63
59	Irrigation	Section 12 (34-110) Diversion Control Structure Rehab	1	10	1	6	5	1	5	10	10	8	20	1	10	78	78	64
7	Irrigation	Steele Pivot Sprinkler (AKA Upper Field Pivot) [a]	1	10	10	10	5	1	5	10	10	4	20	10	5	96	*75*	65
8	Irrigation	Silver Lake Dam Outlet Rehabilitation	8	1	10	6	5	10	5	10	1	9	40	1	10	106	*75*	65
20	Irrigation	Best Ditch Conveyance Rehabilitation	6	10	10	10	5	10	5	10	10	5	20	10	10	111	*75*	65
21	Stream Restoration	West Fork New Fork River Bank Stabilization	1	10	1	10	5	10	5	10	10	6	10	10	10	88	*75*	65
45	Irrigation	Fayette Ranch Pivot Sprinkler (AKA West Field Pivot)	1	10	10	10	5	10	5	10	10	4	20	1	5	96	*75*	65
68	Wildlife/Livestock Water Source	Dave Noble Stockwater Well	1	10	10	10	5	10	10	10	10	5	50	10	10	141	*75*	65

[1] Scores of some projects were modified based on factors that were not directly addressed by the evaluation factors.

4.1.2 Irrigation

A total of 36 irrigation projects were identified (see **Table 26** and **Figure 52**) and 27 were brought forward for development of conceptual designs, cost estimates, and identification of permit requirements (**Table 27**). The majority of the projects involve irrigation system rehabilitation or the implementation of new irrigation structures. Many of the control structures to be rehabilitated or replaced have been in service for over 60 years. These structures have long outlived their useful life, as evidenced during field investigations.

Several types of control structures were analyzed during the irrigation project identification process, including check board, screw gate, rock vein, and slide gate types. In addition to poor physical integrity of these aging structures, many cases of sediment deposition over time and meandering stream courses have caused issues resulting in reduced irrigation water supply. Several of the conceptual designs include sediment dumps (waste-ways) that would be used during high flows to flush any built-up sediment that occurs during the normal months of diversion/check operation.

New Fork Primary Check Structure (Project #69)

In addition to diversion and control structures, other projects investigated include open channel lining or piping to improve conveyance efficiency and to reduce maintenance operations and associated costs. These types of projects are a direct result of (1) erosion, (2) damage caused by borrowing rodents, (3) damming by beavers, or (4) invasive willow root growth.

Table 27 briefly describes each of the irrigation projects and the associated watershed benefits that are anticipated upon implementation. Conceptual designs and cost estimates are provided in Appendix N – Conceptual Designs and Cost Estimates – Small Water Projects. **Table 28** lists the irrigation projects that were excluded from further consideration and provides the rationale for their exclusion.

Converse Ditch Headgate (Project #31)

Table 27. Proposed irrigation projects

PROJECT #	NAME	DESCRIPTION	ISSUE ADDRESSED	OUTCOME/WATERSHED BENEFIT	ESTIMATED COST[a]
2	Mommy Moose Ditch P.O.D. Rehabilitation	Diversion rehabilitation on the north/south branch of Marsh Creek.	This project consists of equalizing flows between the north and south branch of Marsh Creek to successfully deliver adjudicated supply to the Mommy Moose Reservoir.	Increased water control and successful water delivery to existing adjudicated reservoir.	$7,147.40
9	Stipa Ditch P.O.D. Rehabilitation	Rehabilitate existing rock check structure, fortify river bank, and replace aging concrete head gate.	The completion of this project will prevent high flow events from flooding the Stipa Ditch and allow for enough head water to allow for adequate irrigation during low flow events.	Increased water control, irrigation efficiency, and decrease property and ditch damage due to flooding events.	$25,456.15
10	Stipa Ditch Overflow Diversion Rehabilitation	Rehabilitate existing emergency overflow structure	Raising the invert of the emergency outlet pipe and repairing the existing check structure will prevent high river flows from routing back into the Stipa ditch.	Increased water control and decrease property and ditch damage due to flooding events.	$3,502.74
12	Stipa Ditch Sluffing Area Mitigation	Construct pipeline through portion of existing ditch where sand stone escarpment sluffs and regularly blocks existing open channel conveyance system.	Constructing a pipe through this section will allow for periodic sandstone removal without emergency actions needed.	Increased water control, conveyance efficiency, and decrease property and ditch damage due to unexpected sluffing.	$22,485.80
16	Highland Ditch Seepage Area “C”	Alter alignment of the ditch and construct liner through reach of ditch that traverses a sandstone hillside.	The alignment alteration and liner application will decrease conveyance losses as well as reduce maintenance costs.	Increase irrigation efficiency and crop production.	$9,875.50
17	Highland Ditch Seepage Area “D”	Construct ditch liner through reach of ditch that traverses a hillside composed of sand and cobble rock.	The liner application will decrease conveyance losses.	Increase irrigation efficiency and crop production.	$9,651.34
18	Highland Ditch Check Structure Rehabilitation “A”	Replace deteriorated CMP diversion pipe with HDPE and re-install screw gate.	This project will allow the user to control applicable irrigation water.	Increase irrigation efficiency and eliminate breach hazard due to piping.	$3,472.75

PROJECT #	NAME	DESCRIPTION	ISSUE ADDRESSED	OUTCOME/WATERSHED BENEFIT	ESTIMATED COST[a]
19	Highland Ditch Check Structure Rehabilitation "B"	Replace deteriorated CMP diversion pipe with HDPE and re-install screw gate.	This project will allow the user to control applicable irrigation water.	Increase irrigation efficiency and eliminate breach hazard due to piping.	$3,472.75
29	E.C. Walker Ditch P.O.D. Rehabilitation	Construct new diversion structure to replace existing degraded head gate and check structure.	Create a reliable and safe diversion structure to more effectively control natural stream flows and irrigation supply from Willow Creek.	Increase water control capabilities, irrigation efficiency, and crop production.	$26,243.40
30	Seedings Meadow Irrigation Conveyance Rehabilitation	Implement a series of distributing gates within the subject field.	This project will provide the user with a means to control water distribution throughout a network of existing laterals within the subject field.	Increase water control capabilities, irrigation efficiency, and crop production.	$10,888.38
31	Converse Ditch P.O.D. Rehabilitation	Construct new diversion structure to replace existing degraded head gate and check structure.	Create a reliable and safe diversion structure to more effectively control natural river flows and irrigation supply from the West Fork New Fork River.	Increase water control capabilities, irrigation efficiency, and crop production.	$28,968.60
36	New Fork No. 2 Ditch Piping	Convert existing open channel conveyance to pipeline conveyance through the entire corridor of the subject ditch.	The subject conversion will allow for a more efficient means of reservoir and irrigation supply while reducing maintenance required due to rodent and beaver activity.	Decrease conveyance losses and minimize maintenance costs.	Phase I- $120,555.25 Phase II- $116,811.69
41	Strong Ditch P.O.D. Rehabilitation	Construct new diversion structure to replace existing head gate and check structure.	Provide for more reliable irrigation means at times of low flow within the West Fork New Fork River.	Increase water control capabilities at low flows and reduce livestock impact to riparian area in the vicinity of the existing head gate.	$30,419.49
51	Glover Field Head Gate 1	Construct two (2) distributing gates.	Provide user a more controlled method of distributing irrigation water and waste water (return flows).	Increase water control capabilities, irrigation efficiency, and crop production.	$9,165.25
52	Glover Field Head Gate 2	Construct one (1) distributing gate.	Provide user with a means to regulate and divert irrigation supply.	Increase water control capabilities, irrigation efficiency, and crop production.	See #51 [b]

PROJECT #	NAME	DESCRIPTION	ISSUE ADDRESSED	OUTCOME/WATERSHED BENEFIT	ESTIMATED COST[a]
53	Glover Field Head Gate 3	Construct one (1) check structure.	Provide user with a means to regulate and divert irrigation supply.	Increase water control capabilities, irrigation efficiency, and crop production.	See #51 [b]
54	Glover Field Head Gate 4	Construct one (1) distributing gate.	Provide user with a means to regulate and divert irrigation supply.	Increase water control capabilities, irrigation efficiency, and crop production.	See #51 [b]
55	Glover Field Head Gate 5	Construct one (1) check structure.	Provide user with a means to regulate and divert irrigation supply.	Increase water control capabilities, irrigation efficiency, and crop production.	See #51 [b]
56	Glover Field Head Gate 6	Construct one (1) distributing gate.	Provide user with a means to regulate and divert irrigation supply.	Increase water control capabilities, irrigation efficiency, and crop production.	See #51 [b]
57	Glover Field Head Gate 7	Construct one (1) check structure.	Provide user with a means to regulate and divert irrigation supply.	Increase water control capabilities, irrigation efficiency, and crop production.	See #51 [b]
58	Coleman Field Diversion Control Structure	Construct one (1) distributing gate and an accompanying check structure.	Provide user with a means to regulate and divert irrigation supply.	Increase water control capabilities, irrigation efficiency, and crop production.	$3,030.00
59	Island Ditch Waste-Way Structure	Construct new diversion structure and integrated waste-way pipe (return flows).	Provide user a more controlled method of distributing irrigation water and waste water (return flows).	Increase water control capabilities, irrigation efficiency, and crop production.	$20,884.60
60	Willow Creek Rock Check Structure	Construct a rock check structure.	This project will create reliable irrigation head during low stream flows in Willow Creek.	Increase water control capabilities, irrigation efficiency, and crop production.	$4,268.83
61	2-Way Check Structure	Construct a new diversion check structure.	Provide user a more controlled method of distributing irrigation water.	Increase water control capabilities, irrigation efficiency, and crop production.	$3,700.45
65	Orcutt Ditch – Change of P.O.D. & M.O.C.	Change P.O.D. and M.O.C. from Pine Creek to the Pine Creek Canal No. 1 and distribute permitted water rights in developed area.	The Orcutt Ditch has been inoperable for decades and water is currently being illegally diverted from the Pine Creek Canal No. 1. This project will allow for the beneficial use of a portion of the existing water rights via re-alignment and proper documentation through the SEO.	Protect adjudicated water rights, transfer unused water rights to applicable lands, and properly document all changes through the SEO.	$103,574.05

PROJECT #	NAME	DESCRIPTION	ISSUE ADDRESSED	OUTCOME/WATERSHED BENEFIT	ESTIMATED COST[a]
68	Alexander Ditch P.O.D. Check Structure Rehabilitation	Construct new check structure in the West Fork New Fork River to regulate flows to the Alexander Ditch head gate.	This project will create reliable irrigation head during low stream flows in the West Fork New Fork River.	Increase water control capabilities, irrigation efficiency, and crop production.	$23,388.75
69	West Fork New Fork Primary Check Structure Rehabilitation	Construct new check/drop structure to replace the existing inoperable structure.	This project will enable the user to effectively pass River flows through a two (2) structure series that dissipates energy.	Increase water control capabilities, irrigation efficiency, crop production, and river stability.	$40,649.00

[a.] Refer to Appendix N for additional detail regarding project location, design considerations and cost estimates.
[b.] It is envisioned that Projects 51 – 57 will be implemented together. The total cost is presented for Project 51

Table 28. Irrigation projects excluded from further consideration

PROJECT #	PROJECT NAME	RATIONALE FOR EXCLUDING FROM FURTHER STUDY
1	Bee Line Ditch P.O.D. Rehabilitation	This project is being developed by the Murdock Ranch in cooperation with the NRCS. The focus of this project is to rehabilitate the Bee Line Ditch point of diversion (POD) located on the West Fork New Fork River. Based on communication with the NRCS, the project is currently on-hold.
3	Preston Ditch Rehabilitation	This project was eliminated from further consideration based on a preliminary field survey at which time it appeared that the project may be cost prohibitive.
7	Steele Pivot Sprinkler	This was one of the lowest ranked projects (see **Table 26**).
8	Silver Lake Dam Outlet Rehabilitation	This was one of the lowest ranked projects (see **Table 26**).
11	Stipa Ditch Seepage Area Mitigation	Considered normal maintenance.
14	Highland Ditch Seepage Area “A”	Considered normal maintenance.
15	Highland Ditch Seepage Area “B”	Considered normal maintenance.
20	Best Ditch Conveyance Rehabilitation	Landowner participation issues.
45	Fayette Ranch Pivot Sprinkler	This was one of the lowest ranked projects (see **Table 26**).

4.1.3 Wildlife/Livestock Water Source

A total of 24 wildlife/livestock water projects were identified (see **Table 26** and **Figure 52**) 20 were brought forward for development of conceptual designs, cost estimates, and identification of permit requirements Table 29. The 20 projects vary greatly based on location, seasonal use, available power supply, stock tank preference, and water availability. During the conceptual design and estimating phase that was specific to these projects, information relative to final well depths and drawdown was estimated. Stakeholder testimony and area-specific Wyoming SEO well logs were referenced to estimate completed well depths and approximate yield. In addition to stock water demand, these factors are essential in accurately sizing the pump and power supply system. Most of the permitted wells that are in need of rehabilitation should be re-completed and/or tested for these reasons.

Welborn Smith No. 1 (Project #23)

Many of the stock water wells are located in rural areas far from a traditional power grid. For these situations, solar power is the preferred alternative by each respective stakeholder. Solar power is gaining popularity due to the always-improving technology, equipment, and power generation capabilities of the manufacturer's products. In addition, alternative power equipment costs are falling as technology improves annually.

Example solar platform

Most of the stock water developments analyzed during the conceptual design phase include an associated pipeline and trough system. The troughs vary in size and material; however, heavy equipment tire-type troughs were specified by most stakeholders. These troughs stand up to heavy livestock use, severe weather, and ultraviolet light, making them favorable options for end users. Each of these tanks would be installed with wildlife escape ramps and trickle drain systems designed to benefit wildlife as well.

Several spring developments were also identified during the scope of this project. Once these sites are developed, livestock will be diverted to upland sites and the riparian areas associated with each spring will be better protected from livestock pressure. All of the associated spring developments will capture hillside seeps, either fed from underground aquifers or from subsurface irrigation return flows. Similar stock tanks and an associated spring box would accompany each development.

Example stock water trough

Table 29 briefly describes each of the wildlife/livestock water source projects and the associated watershed benefits that are anticipated upon implementation. Conceptual designs and cost estimates are provided in Appendix N – Conceptual Designs and Cost Estimates – Small Water Projects. **Table 30** lists the wildlife/livestock water projects excluded from further consideration and provides the rationale for their exclusion.

Table 29. Proposed wildlife/livestock water source projects

PROJECT #	NAME	DESCRIPTION	ISSUE ADDRESSED	OUTCOME/WATERSHED BENEFIT	ESTIMATED COST[a]
4	Ingle Stock Water Development	Develop stock watering well for summer grazing operations.	This project consists of developing a shallow aquifer well with solar power to supply water to a defined stock tank. Stock water is currently limited or non-existing during summer and fall months in this area.	Minimize livestock and wetland interface and increase capacity for grazing efficiency.	$17,733.69
5	Hedrick Stock Water Development	Develop stock watering well for summer grazing operations.	This project consists of developing a solar powered well to supply water to a defined stock tank. Stock water is currently limited or non-existing during summer and fall months in this area.	Minimize livestock and wetland interface and increase capacity for grazing efficiency.	$38,931.29
6	Anselmi Stock Water Development	Develop stock watering well for summer grazing operations.	This project consists of developing a shallow aquifer well with solar power to supply water to a defined stock tank. Stock water is currently limited or non-existing during summer and fall months in this area.	Minimize livestock and wetland interface and increase capacity for grazing efficiency.	$18,665.69
22	Shriver #2 Stock Water Well Rehabilitation	Re-develop existing well, construct stock tank and pipeline, and convert to solar power.	Provide for summer and fall stock water supply that is currently unavailable.	Increase capacity for grazing efficiency and reduce over grazing based on location of water.	$41,852.02
23	Welborn Smith No. 1 Stock Water Well Rehabilitation	Re-develop existing well, construct stock tank and pipeline, and convert to solar power.	Provide for summer and fall stock water supply that is currently unavailable.	Increase capacity for grazing efficiency and reduce over grazing based on location of water.	$60,804.60
24	Horse Corral #1 Stock Water Well Rehabilitation	Re-develop existing well, construct stock tank and pipeline, and convert to solar power.	Provide for summer and fall stock water supply that is currently unavailable.	Increase capacity for grazing efficiency, reduce over grazing based on location of water, and keep stock from eroding the natural banks of Willow Creek.	$41,373.21

PROJECT #	NAME	DESCRIPTION	ISSUE ADDRESSED	OUTCOME/WATERSHED BENEFIT	ESTIMATED COST[a]
25	Welborn #1 Well Rehabilitation	Construct new control system (irrigation and stock water supply) and stock water tank.	Prevent livestock from damaging existing well (artesian) and create buffer between livestock and natural drainage course. This project will also allow for the stake holder to effectively regulate flows for permitted irrigation and stock water supply.	Minimize livestock and wetland interface, increase capacity for grazing efficiency, and increase irrigation efficiency.	$16,273.19
26	Dumphy Hollow Spring Development (Stock Water)	Construct a side hill spring box for allocation to stock water supply.	Prevent livestock from damaging existing spring area and create buffer between livestock and natural drainage course. This project will also allow for the stake holder to effectively regulate flows for stock water supply.	Minimize livestock and wetland interface and increase capacity for grazing efficiency and flexibility.	$25,127.58
27	Noble Place Spring Development (Stock Water)	Construct a side hill spring box for allocation to stock water supply.	Prevent livestock from damaging existing spring area and create buffer between livestock and natural drainage course. This project will also allow for the stake holder to effectively regulate flows for stock water supply.	Minimize livestock and wetland interface and increase capacity for grazing efficiency and flexibility.	$25,899.80
28	Smith Place Spring Development (Stock Water)	Construct a side hill spring box for allocation to stock water supply.	Prevent livestock from damaging existing spring area and create buffer between livestock and natural drainage course. This project will also allow for the stake holder to effectively regulate flows for stock water supply.	Minimize livestock and wetland interface and increase capacity for grazing efficiency and flexibility.	$26,048.50
38	Cora Butte Stock Water Well Development	Develop a new solar powered well to supply water to a stock tank.	Provide for summer and fall stock water supply that is currently unavailable.	Increase capacity for grazing efficiency and flexibility.	$70,595.26
39	Thompson Butte Stock Water Well Development	Develop a new solar powered well to supply water to a stock tank.	Provide for summer and fall stock water supply that is currently unavailable.	Increase capacity for grazing efficiency and flexibility.	$69,260.42

PROJECT #	NAME	DESCRIPTION	ISSUE ADDRESSED	OUTCOME/WATERSHED BENEFIT	ESTIMATED COST[a]
40	McDowell Flats Stock Water Well Development	Develop a new solar powered well to supply water to a stock tank.	Provide for summer and fall stock water supply that is currently unavailable.	Minimize livestock and wetland interface and increase capacity for grazing efficiency and flexibility.	$60,963.34
42	Marshal Bump Stock Water Well Development	Develop a new well to supply water for stock use.	Provide for summer and fall stock water supply that is currently unavailable.	Increase capacity for grazing efficiency and flexibility.	$40,111.98
44	Brosman No. 2 Stock Water Well Development	Develop a new solar powered well to supply water to a stock tank.	Provide for summer and fall stock water supply that is currently unavailable.	Increase capacity for grazing efficiency and flexibility.	$81,994.17
46	Coleman Pasture Stock Water Tank & Pipeline	Construct new supply pipeline and Stock Water Tank.	Provide for summer and fall stock water supply that is currently unavailable.	Increase capacity for grazing efficiency and flexibility.	A- $23,227.03 B- $34,542.45
48	Coleman Field Spring Development	Construct a side hill spring box for allocation to stock water supply.	Prevent livestock from damaging existing spring area and create buffer between livestock and natural drainage course. This project will also allow for the stake holder to effectively regulate flows for stock water supply.	Minimize livestock and wetland interface and increase capacity for grazing efficiency and flexibility.	$22,383.31
49	Miller Field Stock Water Tanks and Pipelines	Construct two (2) new supply pipelines and Stock Water Tanks.	Provide for year-around stock water supply that is currently unavailable.	Increase capacity for grazing efficiency and flexibility and provide for winter feeding location.	$47,083.84
50	Miller Field Stock Water Well Rehabilitation	Re-develop the existing well and convert to solar power.	Provide for a more reliable means of supplying water to a projected three (3) stock water tanks.	Increase beneficial supply for stock water use and reduce operating costs and emissions.	$20,432.25
66	Burgess Stock Water Well Development	Develop a new well to supply water to a stock reservoir.	Provide for summer and fall stock water supply that is currently unavailable.	Increase capacity for grazing efficiency and flexibility.	$50,762.90

Source: Ayers and Westcot 1985

[a.] Refer to Appendix N for additional detail regarding project location, design considerations and cost estimates

Table 30. Wildlife/livestock water source projects excluded from further study

PROJECT #	PROJECT NAME	RATIONALE FOR EXCLUDING FROM FURTHER STUDY
43	Well Power Supply Rehabilitation	Lack of landowner interest.
47	No Man's Land Stock Water Tank & Pipeline	Lack of landowner interest.

PROJECT #	PROJECT NAME	RATIONALE FOR EXCLUDING FROM FURTHER STUDY
68	Cora Valley Angus Stock Water Development	Located outside watershed based on preliminary field investigation.

4.1.4 Small Water Storage

For the purposes of this study, small water storage projects were defined as any dam less than 20 feet in height and with less than 20 acre-feet of storage. A total of eight[6] small water storage projects were identified (see **Table 26** and **Figure 52**) and all but one were brought forward for development of conceptual designs, cost estimates, and identification of permit requirements (**Table 31)**.

Kaylou Stock Reservoir (Project #37)

Of these, one involves rehabilitation and seven are considered new small water storage projects. Five of the projects have already been permitted through the Wyoming SEO.

The sole rehabilitation project (Project #37) is in the upper reach of the subject watershed; it involves rehabilitation of the principal outlet structure (shown at left). The original corrugated metal pipe has been washed out and the embankment has been compromised due to erosion. An off-channel slide gate and pipe are being proposed for construction, as evidenced in the attached appendices.

Project #s 32 through 35 have been designed and permitted, but have not been constructed. These reservoirs are intended to serve as irrigation supply for uplands along the West Fork New Fork River. Considered to be shovel-ready, these projects rank high in the evaluation matrix.

The remaining small water storage projects (Project #s 63, 64, and 65) are conceptual designs for new stock water supply. These projects were brought forward by Intermountain Aquatics, Inc., at the request of their client. In April 2017, these projects were proposed and identified as the AA Pasture, Y "Seedings" Pasture, and T Pasture Reservoirs. The final conceptual designs for these referenced areas include eight separate reservoirs. For organizational reasons, and due to common ownership, these projects have been analyzed as two projects, the Dumphy Stockwater Storage Ponds and the AA Pasture Stockwater Storage Ponds.

Table 31 briefly describes each of the identified small water storage projects and the associated watershed benefits that are anticipated upon implementation. Conceptual designs and cost estimates are provided in Appendix N – Conceptual Designs and Cost Estimates – Small Water Projects. **Table 32** lists the projects excluded from further consideration and provides the rationale for their exclusion.

[6] Projects 62 and 63 include three and five separate reservoirs, respectively.

Table 31. Proposed small water storage projects

PROJECT #	NAME	DESCRIPTION	ISSUE ADDRESSED	OUTCOME/ WATERSHED BENEFIT	ESTIMATED COST [a]
32	Martin Reservoir	Construct the permitted dam.	This project has been permitted through the Wyoming SEO and will provide for irrigation of adjacent lands. The project will also benefit wildlife and support wetland development.	Minimize livestock and wetland interface and increase capacity for grazing efficiency and flexibility.	$62,947.93
33	Valerie Reservoir	Construct the permitted dam.	This project has been permitted through the Wyoming SEO and will provide for irrigation of adjacent lands. The project will also benefit wildlife and support wetland development.	Minimize livestock and wetland interface and increase capacity for grazing efficiency and flexibility.	See #32
34	Susan Reservoir	Construct the permitted dam.	This project has been permitted through the Wyoming SEO and will provide for irrigation of adjacent lands. The project will also benefit wildlife and support wetland development.	Increase water control capabilities, irrigation efficiency, and crop production.	SEE ABOVE (Combined)
35	Annette Reservoir	Construct the permitted dam.	This project has been permitted through the Wyoming SEO and will provide for irrigation of adjacent lands. The project will also benefit wildlife and support wetland development.	Increase water control capabilities, irrigation efficiency, and crop production.	SEE ABOVE (Combined)
37	Kaylou Stock Reservoir Outlet Works Rehabilitation	Rehabilitate the existing dam breach and install a new principal outlet structure.	Restore the dam back to its permitted stage-storage capacity and install a principal outlet structure that will not compromise the repaired dam into the future.	Unappropriated water will be used to irrigate new lands for eventual adjudication. Crop production will also be created from this project.	$11,748.90
62-1	Lower State Reservoir-1	Construct new stock water supply reservoir.	Provide for summer and fall stock water supply that is currently limited.	Increase capacity for grazing efficiency and flexibility.	$94,609.08
62-2	Lower State Reservoir-2	Construct new stock water supply reservoir.	Provide for summer and fall stock water supply that is currently limited.	Increase capacity for grazing efficiency and flexibility.	$120,670.15
62-3	Lower State Reservoir-3	Construct new stock water supply reservoir.	Provide for summer and fall stock water supply that is currently limited.	Increase capacity for grazing efficiency and flexibility.	$89,264.08

PROJECT #	NAME	DESCRIPTION	ISSUE ADDRESSED	OUTCOME/ WATERSHED BENEFIT	ESTIMATED COST [a]
63-1	Dumpy Reservoir-1	Construct new stock water supply reservoir.	Provide for summer and fall stock water supply that is currently limited.	Increase capacity for grazing efficiency and flexibility.	$126,454.57
63-2	Dumpy Reservoir-2	Construct new stock water supply reservoir.	Provide for summer and fall stock water supply that is currently limited.	Increase capacity for grazing efficiency and flexibility.	$12,402.04
63-3	Dumpy Reservoir-3	Construct new stock water supply reservoir.	Provide for summer and fall stock water supply that is currently limited.	Increase capacity for grazing efficiency and flexibility.	$11,573.88
63-4	Dumpy Reservoir-4	Construct new stock water supply reservoir.	Provide for summer and fall stock water supply that is currently limited.	Increase capacity for grazing efficiency and flexibility.	$13,449.22
63-5	Dumpy Reservoir-5	Construct new stock water supply reservoir.	Provide for summer and fall stock water supply that is currently limited.	Increase capacity for grazing efficiency and flexibility.	$13,171.59

[a.] Refer to Appendix N for additional detail regarding project location, design considerations, and cost estimates
[b.] It is envisioned that Projects 32 to 34 will be implemented together. The total cost is presented for Project 32.

Table 32. Small water storage projects excluded from further consideration

PROJECT #	PROJECT NAME	RATIONALE FOR EXCLUDING FROM FURTHER STUDY
64	Seedings Reservoir “Pasture Y”	Lack of landowner interest

4.1.5 Stream Restoration

Two stream restoration projects were identified through this study—Project #13 and #21 (see **Table 26** and **Figure 52)**. Each of these projects involves bank stabilization, one on the West Fork New Fork River and one on Duck Creek. For the following reasons, neither project was brought forward for conceptual designs.

At the West Fork New Fork Project (#21), the main river channel is beginning to erode a convex bank directly upstream of a privately owned bridge. The landowner is concerned about potential loss of the bridge. Due to the complexities associated with bank stabilization in this reach of the subject river, including impacts to upstream and downstream owners, associated construction costs, permitting requirements, and project type (restoration), Project #21 ranked low was not brought forward during the conceptual design phase of this study.

West Fork New Fork River (Project #21)

A preliminary meeting was held with the stakeholder in the fall of 2016 regarding the Duck Creek Project (Project #13). Landowners believed that floodwaters from Duck Creek were impacting the Stipa Ditch, which is directly downstream of the confluence of Duck Creek and the West Fork New Fork River. After further investigation following abnormally high water levels in the spring of 2017, it was determined that the actual flood water was coming from the West Fork New Fork River near the Stipa Ditch diversion structure. At the request of the landowner, the Project #13 was not brought forward for conceptual design; however, a section of bank stabilization was implemented within the Stipa Ditch Head Gate Rehabilitation Project (Project #12) in order to minimize flooding the ditch.

Stipa Ditch Sloughing (Project #12)

4.2 Large Surface Water Storage Projects

A total of 40 potential reservoir sites were identified to provide additional water storage opportunities and flood control needs within the watershed (**Figure 53** and **Table 33**). Of the 40 sites:

- Twelve were identified through the Feasibility Study Report completed by RJH during April 2017 (RJH Consultants 2017) for the New Fork Lake Dam Enlargement Level II (Phase I) Study.
- Nineteen were identified through review of previously completed studies within the watershed (see Section 3.5 for a discussion of previously completed studies).
- Nine were identified as new potential sites with minimum storage of 5,000 ac-ft.

Alternatives included modifications to existing dams, enlargement of existing glacial lakes, and construction of new dams. New dams included on-channel dams that could be filled from direct stream inflows and off-channel dams that would require a new water conveyance canal or pipeline to fill the reservoir. One new potential site, Site 9, is located outside the watershed and would require a canal or pipeline to convey water into the New Fork River watershed.

Silver Lake Dam Reconnaissance Study

After completion of the draft of this document in September 2017, the Silver Lake Irrigation District came forward with a request to conduct a reconnaissance study of the Silver Lake Dam, in the Bridger Wilderness within the study area boundaries.

A reconnaissance level study was completed. Due to the late date at which this study was initiated and completed, the results are presented separately in Appendix S.

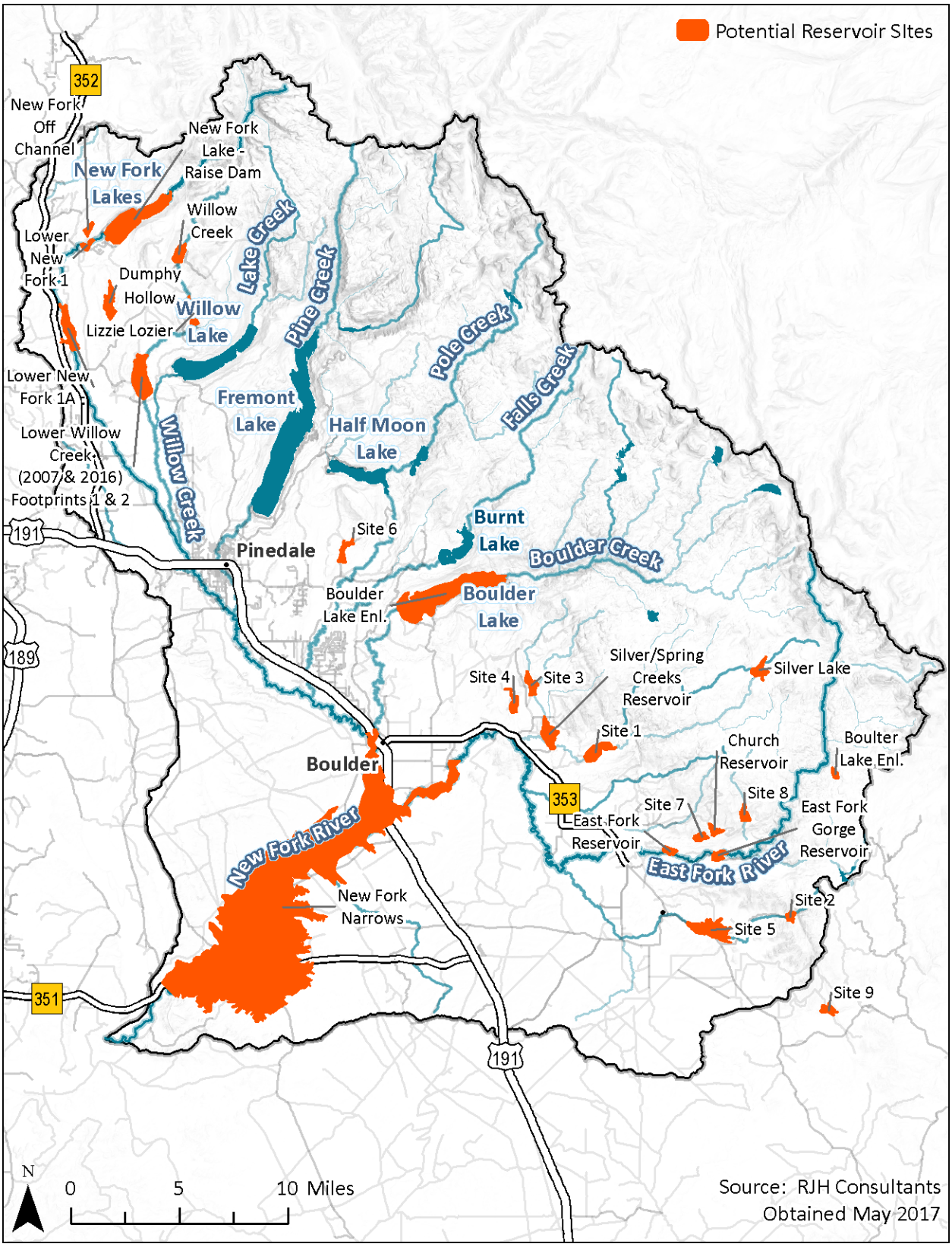

Figure 53. Potential reservoir sites.

Table 33. Summary of alternative reservoir sites

ALTERNATIVE	MODIFICATION OR NEW CONSTRUCTION	EMBANKMENT HEIGHT [c] (FT)	CREST LENGTH [c] (FT)	STORAGE/YIELD [d] (ACRE-FT)	ON / OFF CHANNEL	NORMAL POOL INUNDATED ACREAGE
Boulder Lake Enlargement	Modification	50[a]	850	40,000[f]	On Channel	2616 (914 acres of new inundation)
Boulter Lake Enlargement	Modification	33 (12.5 ft raise[1])	140	494[f]	On Channel	52 (10 acres of new inundation)
Burnt Lake	New Construction (existing glacial lake)	8	187	1,576	On Channel	790 (no new inundation)
Church	New Construction	85	805	4,250[g]	Off Channel	98
Divide	New Construction (existing glacial lake)	-	-	1,027	On Channel	-
Dumphy Hollow	New Construction	86	2640	9,400	Off Channel	281
East Fork	New Construction	45	2,060	1,700[k] (2,400)	On Channel	74[k] (87)
East Fork Gorge	New Construction	85	2,340	1,900[k] (4,000)	On Channel	77[k] (130)
East Fork No.1	New Construction	-	-	4,734	On Channel	-
Feltner	New Construction	-	-	1,280	On Channel	-
Fremont Lake Enlargement	Replaced Existing Structure (New Dam)	6	140	5,395	On Channel	-
Half Moon Lake Enlargement	New Construction (existing glacial lake)	-	-	14,700[i]	On Channel	-
Lizzie Lozier	New Construction	147	1840	9400	80% On Channel (short canal needed for additional 20%)	169
Lower New Fork 1	New Construction	30	310	662	On Channel	79
Lower New Fork 1A	New Construction	43	1770	9400	On Channel	400
Lower Willow Creek (2007)	New Construction	75	3,000	23,190	On Channel	757
Lower Willow Creek (2016)	New Construction	37[h]	2560	9400	On Channel	562

ALTERNATIVE	MODIFICATION OR NEW CONSTRUCTION	EMBANKMENT HEIGHT [c] (FT)	CREST LENGTH [c] (FT)	STORAGE/YIELD [d] (ACRE-FT)	ON / OFF CHANNEL	NORMAL POOL INUNDATED ACREAGE
Marm's Lake	New Construction (existing glacial lake)	-	-	562	On Channel	-
New Fork Lake - Lower Outlet	Modification: replace existing embankment and modify spillway	26 (3[a])	1,180 (930[b])	9400	On Channel	1265 (no new inundation)
New Fork Lake - Raise Dam	Modification: replace existing dam, enlarge reservoir	36 (10[a])	1,100 (850[b])	9400	On Channel	1361.3 (96 acres new inundation)
New Fork Lake - Raise Dam and Lower Inlet	Modification: replace existing dam, enlarge reservoir	29 (5[a])	1,280 (1,030[b])	9400	On Channel	1265 (topo not accurate enough to measure inundation for 2 ft raise)
New Fork Narrow	New Construction	98	3300	180,000[j]	On Channel	8640
New Fork Off Channel	New Construction	90	1890	3002	Off Channel	71
Pyramid	New Construction (existing glacial lake)	-	-	638	On Channel	-
Silver Lake	Modification			2152 Total (933 additional ac-ft added in 1955)	On Channel	currently 157.52 acres
Silver Creek	New Construction	-	-	6,000[i]	On Channel	-
Silver Creek - East Fork (2 Sites)	New Construction	-	-	8,000 and 3,400	On Channel	-
Silver/Spring Creeks	New Construction	65	3,000	10,000[e]	On Channel	369
Willow Creek	New Construction	126	1535	9400	80 % On Channel (long canal needed for additional 20%)	186
Willow Lake - Lower Inlet	Modification	0[a]	0[b]	3600	On Channel	1825 (no new inundation)
Willow Lake - Lower Inlet and New Fork - Lower Inlet	Modification	0[a]	0[b]	3600	On Channel	3090 (no new inundation)
Site 1	New Construction	71	1291	5000	On Channel	300

ALTERNATIVE	MODIFICATION OR NEW CONSTRUCTION	EMBANKMENT HEIGHT [c] (FT)	CREST LENGTH [c] (FT)	STORAGE/YIELD [d] (ACRE-FT)	ON / OFF CHANNEL	NORMAL POOL INUNDATED ACREAGE
Site 2	New Construction	185	1475	5000	60% On Channel (long canal for additional 40%)	79
Site 3	New Construction	83	1729	5000	On Channel	168
Site 4	New Construction	77	1488	5000	Off Channel	180
Site 5	New Construction	35	462	5000	60% On Channel (long canal for additional 40%)	638
Site 6	New Construction	110	1964	5000	Off Channel	140
Site 7	New Construction	Main: 109 Saddle: 40	Main: 821 Saddle: 588	5000	Off Channel	93
Site 8	New Construction	118	2048	5000	On Channel	116
Site 9	New Construction	120	315	5000	On Channel (outside of watershed)	135

Notes:
a Dam height increase from existing dam height
b Crest length increase from existing crest length. Increase due to raising of spillway to enable the Probable Maximum Flood to pass.
c Embankment height and crest length calculations for the nine new sites included an assumed freeboard of 5 ft.
d For modification of existing reservoirs or glacial lakes, the additional storage or yield created by the modification is reported.
e Value reported as 85% firm yield.
f Value reported as 80% firm yield.
g Value reported as 90% firm yield.
h Embankment height calculation assumed a freeboard of 5 ft.
i Yield percentage was not reported.
j Value reported as active storage.
k Reported storage does not match the reported reservoir elevation. Reported storage and resulting reservoir area are not in parentheses. Calculated storage and reservoir area based on reported reservoir elevation are in parentheses.

4.2.1 Large Reservoir Prioritization and Descriptions

The three preferred sites are Willow Lake lower inlet, Site 9, and Site 7 as shown on **Figure 53**. These sites were selected based on a screening evaluation provided in Appendix O – Reservoir Screening Evaluation, and in general were selected because they:

- Did not have an identified fatal flaw
- Were not located in wilderness areas
- Ranked higher than other sites based on 15 categories
- Were not affiliated with the New Fork Lake Level II Study.

The following paragraphs describe the general design concept for each site; additional information is provided in Appendix P – Reservoir Conceptual Design Discussion.

Willow Lake will include a new embankment, outlet works, and spillway downstream of the existing dam. The new dam will be primarily composed of a concrete spillway capable of conveying the design storm event. The outlet works will be concrete-encased and adjacent to the spillway. The outlet works and channel between the outlet works and lake will be lowered 2 feet from the current outlet invert elevation to access additional storage within the existing lake. The embankment will be located on the sides of the spillway and will include slope protection as well as filters and drains that will collect and manage seepage. A plan and oblique view of the new dam at Willow Lake is shown on **Figure 54** and **Figure 55**. Before advancing this site, the need for additional storage should be confirmed; it is likely that additional coordination with stakeholders will be required.

Site 7 is adjacent to and similar to the previously evaluated Church Reservoir. Church Reservoir, located northeast of Site 7, was previously identified within the New Fork River watershed as a potential reservoir site by States West Water Resources Corporation (States West) for the Wyoming Water Development Commission (WWDO) (States West 2002). Site 7 is an off-channel reservoir that would be impounded by an earthen embankment that would include slope protection as well as filters and drains that would collect and manage seepage. The dam would also include a spillway, outlet works, and foundation grouting to reduce seepage. The proposed main embankment design for Site 7 would be similar to the design for Church Reservoir, shown on Sheet 4 of Attachment B in Appendix P – Reservoir Conceptual Design Discussion , but would differ in dam height, crest length, and crest width. Before advancement of a dam at Site 7, the evaluation should confirm that Site 7 is preferred over Church Reservoir; in general, the embankment at Site 7 would be larger and likely would be more expensive than the embankment at Church Reservoir.

Site 9 will include a new roller-compacted concrete (RCC) dam on the Big Sandy River. The dam will have conventional concrete surfacing on the upstream and downstream slopes, and will include a gallery, access adit to the gallery, outlet works, and a spillway. A small spillway will be included to convey routine flows; during extreme storm events the entire dam will be overtopped and used as a spillway. A plan and oblique view of the new dam at Willow Lake is shown on **Figure 56** and **Figure 57**. Before advancement of this site, the quantity of water available for storage in the reservoir needs to be identified.

All three sites could provide additional water storage for the New Fork River basin to reduce water shortages.

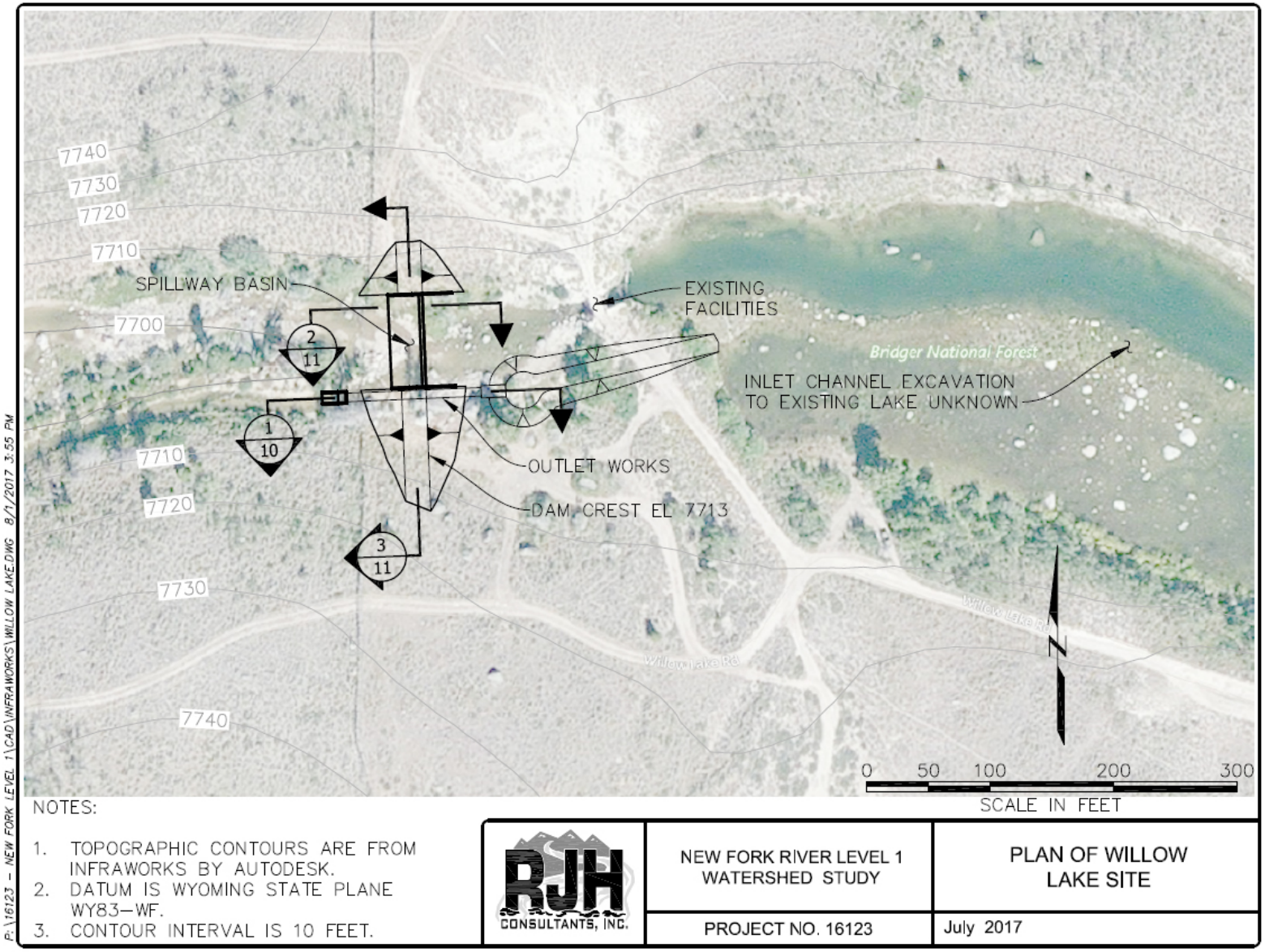

NOTES:

1. TOPOGRAPHIC CONTOURS ARE FROM INFRAWORKS BY AUTODESK.
2. DATUM IS WYOMING STATE PLANE WY83-WF.
3. CONTOUR INTERVAL IS 10 FEET.

RJH CONSULTANTS, INC.

NEW FORK RIVER LEVEL 1 WATERSHED STUDY	PLAN OF WILLOW LAKE SITE
PROJECT NO. 16123	July 2017

Figure 54.

Figure 55. Oblique view of the proposed Willow Lake modifications.

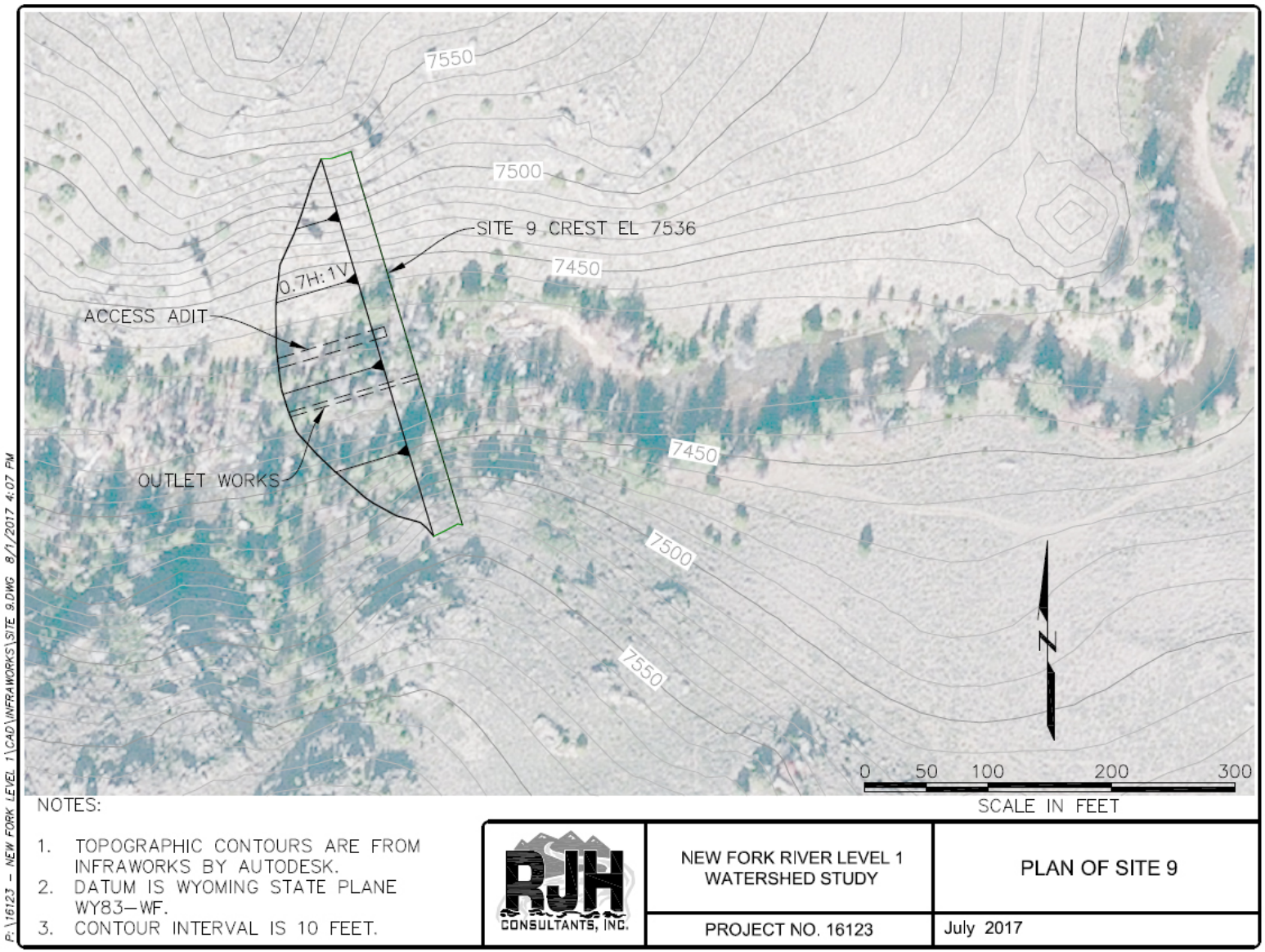
7550
7500
SITE 9 CREST EL 7536
7450
0.7H:1V
ACCESS ADIT
OUTLET WORKS
7450
7500
7550
N
0 50 100 200 300
SCALE IN FEET
NOTES:
1. TOPOGRAPHIC CONTOURS ARE FROM INFRAWORKS BY AUTODESK.
2. DATUM IS WYOMING STATE PLANE WY83–WF.
3. CONTOUR INTERVAL IS 10 FEET.
RJH CONSULTANTS, INC.
NEW FORK RIVER LEVEL 1 WATERSHED STUDY
PLAN OF SITE 9
PROJECT NO. 16123
July 2017
P:\16123 – NEW FORK LEVEL 1\CAD\INFRAWORKS\SITE 9.DWG 8/1/2017 4:07 PM

Figure 56.

P:\16123 - NEW FORK LEVEL 1\CAD\INFRAWORKS\SITE 9 SNAPSHOT.DWG 8/1/2017 4:11 PM

RJH CONSULTANTS, INC.	NEW FORK RIVER LEVEL 1 WATERSHED STUDY	SITE 9 OBLIQUE VIEW
	PROJECT NO. 16123	July 2017

Figure 57

5 Cost Estimates

5.1 Small Water Projects

Cost estimates were compiled for all conceptual designs developed as part of this study using the WWDC Level III guidelines, as required under Task 7 of the New Fork River Watershed, Level I Study. These costs were based on year 2017 with the location of each project factored in for mobilization estimates. Materials specified for use within these conceptual designs were researched through vendors, suppliers, and contractors. With local knowledge of available contractors, aggregate material availability/location, and installation costs, our team compiled realistic figures for each respective unit. Variables such as concrete application (cast-in-place versus pre-cast), metal fabrication (field/shop), and solar pump system designs are examples of specific and unique factors that were analyzed on an individual project basis. Regarding stockwater wells, conservative estimates were made regarding well-production zones, power requirements, and associated equipment costs.

5.2 Large Water Storage

5.2.1 Estimated Costs

RJH developed Opinion of Probable Project Costs (OPPC) for three preferred alternative large reservoirs (see Section 4.2.1) based on conceptual-level dam designs. The OPPCs are presented in **Table 34** through **Table 36**. The cost opinions were developed based on estimated quantity of major construction items and estimate of unit costs. Estimated unit prices and costs for the work items were derived from the following sources: (a) cost estimates provided by material suppliers, (b) Heavy Construction Costs with RSMeans Data for 2017 (Gordian Group 2017), (c) bid tabs, and (d) experience on similar construction work. Costs from bid tabs were adjusted to account for annual escalation. Area cost factors were applied to unit rates as appropriate to adjust estimated rates to the project's geographic location.

The OPPC was developed as a Class 4 estimate in general accordance with the Association for the Advancement of Cost Engineering (AACE). This level is appropriate for a study phase, where design engineering is between 1 and 15 percent complete. According to the AACE, the reliability of this level of estimate should be considered to be between about minus 15 to 30 percent and plus 20 to 50 percent, when all costs are compared to 2017 dollars.

The sum of the listed items for each category is defined as the base construction cost (BCC). The sum of the BCC, mobilization, bonds, and insurance is defined as the direct construction cost (DCC), and includes the following allowances:

- 5 or 8 percent of the BCC for the construction contractor's costs for mobilization.
- 1.5 percent of the BCC for the construction contractor's costs for bonds and insurance.

The total construction cost (TCC) is the DCC plus a 30 percent allowance for final design contingencies, unlisted items, and construction contingencies.

The OPPC is the sum of the TCC, preliminary and final design engineering, owner administration, construction engineering, permitting, and mitigation. For this project, the OPPC includes allowances of:

- 15 percent of the DCC for preliminary and final design engineering.
- 2 percent of the DCC for owner administration.

- 10 percent of the DCC for construction engineering.
- 10 to 30 percent of the DCC for permitting.
- 5 percent of the DCC for mitigation.

This OPPC is based on our professional opinion of the costs and will change as more design details are developed. Actual costs would be affected by a number of factors beyond current control, such as supply and demand for the types of construction required at the time of construction and in the project vicinity, changes in material supplier costs, changes in labor rates, the competitiveness of subcontractors and suppliers, changes in applicable regulatory requirements, and changes in design standards and concepts. Therefore, conditions and factors that arise as project development proceeds through the design, bidding, and construction phases might result in actual project costs that differ from the estimates documented in this memorandum.

Table 34. Opinion of Probable Projected Cost – Willow Lake – July 2017

ITEM	QUANTITY	UNIT	UNIT RATE ($)	COST ($)
Embankment And Reservoir				
Erosion and Sediment Control	1	LS	$ 15,000.00	$ 15,000.00
Dewatering	1	LS	$ 50,000.00	$ 50,000.00
Stripping	3.6	AC	$ 4,400.00	$ 15,840.00
Earth Fill	6,100	CY	$ 20.00	$ 122,000.00
Filter Material	1,400	CY	$ 75.00	$ 105,000.00
Slope Protection	1,300	CY	$ 90.00	$ 117,000.00
Channel construction to Lake	1	LS	$ 150,000.00	$ 150,000.00
Structural Concrete	650	CY	$ 650.00	$ 422,500.00
Outletworks Pipe	110	LF	$ 600.00	$ 66,000.00
Inlet Structure	1	LS	$ 50,000.00	$ 50,000.00
Outlet Structure	1	LS	$ 40,000.00	$ 40,000.00
Topsoil	1,460	CY	$ 2.50	$ 3,650.00
Seeding	3.6	AC	$ 1,500.00	$ 5,400.00
Base Construction Cost (BCC)				**$ 1,162,390.00**
Mob/Demob 2017 (5% of BCC)				$ 58,119.50
Bonds/Insurance (1.5% of BCC)				$ 17,435.85
Direct Construction Cost (DCC)				**$ 1,237,945.35**
Construction Contingencies (30% of DCC)				$ 371,383.61
Total Construction Cost (TCC)				**$ 1,609,328.96**
Preliminary and Final Design Engineering (15% of TCC)				$ 241,399.34
Owner Administration (2% of TCC)				$ 32,186.58
Permitting (30% of TCC)				$ 482,798.69
Mitigation (5% of TCC)				$ 80,466.45
Construction Engineering (10% of TCC)				$ 160,932.90
Opinion of Probable Project Cost				**$ 2,607,112.91**

Table 35. Opinion of Probable Projected Cost – Site 9 – July 2017

ITEM	QUANTITY	UNIT	UNIT RATE ($)	COST ($)
Embankment And Reservoir				
Erosion and Sediment Control	1	LS	$ 21,000.00	$ 21,000.00
Stripping	3.8	AC	$ 4,400.00	$ 16,720.00
Foundation Soil Excavation	11,000	CY	$ 4.00	$ 44,000.00
Foundation Rock Excavation	17,000	CY	$ 60.00	$ 1,020,000.00
Leveling concrete	7,000	CY	$ 260.00	$ 1,820,000.00
RCC	55,000	CY	$ 230.00	$ 12,650,000.00
Structural Concrete	7,500	CY	$ 650.00	$ 4,875,000.00
Grouting drilling	6,000	LF	$ 35.00	$ 210,000.00
Grouting cement	140	TON	$ 3,000.00	$ 420,000.00
Foundation drain drilling	3,000	FT	$ 50.00	$ 150,000.00
Outletworks Pipe	110	LF	$ 600.00	$ 66,000.00
Gates, Valves and Misc	1	LS	$ 150,000.00	$ 150,000.00
Canal rehabilitation	1	LS	$ 1,250,000.00	$ 1,250,000.00
Topsoil	1,400	CY	$ 2.50	$ 3,500.00
Seeding	3.8	AC	$ 1,500.00	$ 5,700.00
Base Construction Cost (BCC)				**$ 22,701,920.00**
Mob/Demob 2017 (8% of BCC)				$ 1,816,153.60
Bonds/Insurance (1.5% of BCC)				$ 340,528.80
Direct Construction Cost (DCC)				**$ 24,858,602.40**
Construction Contingencies (30% of DCC)				$ 7,457,580.72
Total Construction Cost (TCC)				**$ 32,316,183.12**
Preliminary and Final Design Engineering (15% of TCC)				$ 4,847,427.47
Owner Administration (2% of TCC)				$ 646,323.66
Permiting (10% of TCC)				$ 3,231,618.31
Mitigation (5% of TCC)				$ 1,615,809.16
Construction Engineering (10% of TCC)				$ 3,231,618.31
Opinion of Probable Construction Cost				**$ 45,888,980.03**

Table 36. Opinion of Probable Projected Cost – Site 7 – July 2017

ITEM	QUANTITY	UNIT	UNIT RATE ($)	COST ($)
Embankment And Reservoir				
Earth Fill	560,000	CY	$ 4.00	$ 2,240,000.00
Filter Material	19,000	CY	$ 75.00	$ 1,425,000.00
Slope Protection	25,000	CY	$ 90.00	$ 2,250,000.00
Excavation	127,000	CY	$ 5.00	$ 635,000.00
Grouting drilling	15,000	LF	$ 50.00	$ 750,000.00
Outlet Works	1	LS	$ 1,817,000.00	$ 1,817,000.00
Spillway	1	LS	$ 402,000.00	$ 402,000.00
Diversion Dam/Canal	1	LS	$ 772,000.00	$ 772,000.00
Access Roads	1	LS	$ 206,000.00	$ 206,000.00
Base Construction Cost (BCC)				**$ 10,497,000.00**
Mob/Demob 2017 (5% of BCC)				$ 524,850.00
Bonds/Insurance (1.5% of BCC)				$ 157,455.00
Direct Construction Cost (DCC)				**$ 11,179,305.00**
Construction Contingencies (30% of DCC)				$ 3,353,791.50
Total Construction Cost (TCC)				**$ 14,533,096.50**
Preliminary and Final Design Engineering (15% of TCC)				$ 2,179,964.48
Owner Administration (2% of TCC)				$ 290,661.93
Permitting (10% of TCC)				$ 1,453,309.65
Mitigation (5% of TCC)				$ 726,654.83
Construction Engineering (10% of TCC)				$ 1,453,309.65
Opinion of Probable Construction Cost				**$ 20,636,997.03**

* Costs from 2002 Church Reservoir Report, adjusted to 2017 costs (x1.65)
* Quantities scaled from total Earth Fill of Site 7/Church Reservoir

5.2.2 Ability to Pay

For a project to be financially viable to producers, the benefit received by a project needs to exceed the cost incurred by the producer. The ability to pay analysis for this Level I study is based on historical data in the region of the project. According to studies by Sunrise Engineering (Sunrise, 2014) and RJH (RJH, April 2017) Wyoming producers in the region that primarily grow grass to feed livestock have been willing to pay about 5 to 10 percent of the total cost of the project. The projects cited by Sunrise and RJH had total costs of about $12 million. For projects with larger capital costs, the percent that could be funded by the producers would decrease. The remainder of funding would be required through a Wyoming Water Development Commission (WWDC) grant. The costs for the three projects and anticipated ranges of the percent cost that could be contributed by producers are listed in **Table 37**.

Table 37. Summary of Dam Costs

Alternative	Additional Water Storage (AC-FT)	Estimated Construction Costs ($2017)	Potential Percent Contribution by Producers (%)
Willow Lake	9,400	$2,607,000	10% or greater
Site 9	5,000	$45,889,000	Less than 5%
Site 7	5,000	$20,637,000	5% to less than 5%

5.2.3 Operation and Maintenance Costs

After project completion, there will be ongoing maintenance tasks associated with the operation of the facility and funds allocated for future major repairs (sinking fund) resulting in operation and maintenance (O&M) costs. The users of the facility will be responsible for funding O&M costs. Annual O&M costs for three dam alternatives were calculated based on the following parameters: location of dam from the nearest city, caretaker hours per year to operate the facility and perform minor repairs, vegetation clearing, observations of operations, and complexity of facility. Estimated annual O&M costs for Willow Lake, Site 9, and Site 7 are shown in **Table 38**. Willow Lake and Site 7 will have similar maintenance requirements because they are both earthen embankment dams with similar outlet structures. Site 9 requires more maintenance than the other alternatives because it is a large RCC dam with miscellaneous components that need to be routinely monitored, and maintained.

Table 38. Estimated Annual O&M Costs

Alternative	Estimated Annual O&M Cost ($2017)
Willow Lake	$18,000
Site 9	$25,500
Site 7	$18,000

6 Permits, Notification, and Approvals

The New Fork River watershed contains lands administered by the USFS, BLM, state, and private individuals. The projects identified in this study range from maintenance of stock water sources, head gates, and irrigation canals (i.e., “small water projects”) to the modification of existing reservoirs and construction of new reservoirs capable of storing tens of thousands of acre-feet (“large water storage projects”). Given the variety of land ownership/management and project types and sizes, the permitting requirements might vary from something as simple as filing a water rights application to as complicated as completion of a full Environmental Impact Statement (EIS).

Given the likely differences in the requirements for small water projects versus large water storage projects, this section of the document is divided into two subsections; one addressing small water projects, and one for large water storage projects. Appendix Q - Commonly Required Types of Permits, Notifications, and Approvals provides descriptions of the commonly required types of permits, notifications, and approvals.

6.1 Small Water Project Permitting

Small water projects are generally defined as construction or rehabilitation and replacement of small dams, windmills, spring development, pipelines, etc., to impound, develop, and convey water for livestock, wildlife, irrigation, environmental, and recreational purposes. A small project is a project where estimated construction or rehabilitation costs, permit procurement, construction engineering and project land procurement are less than $135,000.00 (WWDC 2017).

A screening-level permits, notifications, and approvals matrix for the small water projects identified as part of this Level I watershed study is provided in **Table 37**. **Table 37** is based on a screening level analysis of these projects and is intended to provide an initial list of permits, notifications, and/or approvals that <u>might</u> be needed, based on the preliminary engineering and reconnaissance level field investigations that have been completed to date. **Table 37** is intended for planning purposes only and consultation with the appropriate land and resource management agencies is recommended before proceeding further with these projects.

Table 39. Small water projects screening-level permits, notifications, and approvals matrix

PROJECT NUMBER	NAME	CWA SECTION 404 AND 401	SPECIAL USE PERMITS/RIGHTS-OF-WAY/EASEMENTS	SAGE-GROUSE[1]	SECTION 106	NEPA	ENDANGERED SPECIES ACT	WY STATE ENGINEERS	USFS COORDINATION	BLM COORDINATION	STATE COORDINATION
1	Bee Line Ditch POD Rehabilitation	X		X							
2	Mommy Moose Ditch Diversion Rehabilitation (AKA Marsh Creek Ditch POD Rehab)	X	X	X		X				X	
3	Preston Ditch Rehabilitation	X		X	X	X			X	X	X
4	Ingle Stockwater Well Development	X		X			X				
5	Hedrick Stockwater Well Development	X		X			X				
6	Anselmi Stockwater Well Development	X		X			X				
7	Steele Pivot Sprinkler (AKA Upper Field Pivot)			X							
8	Silver Lake Dam Outlet Rehabilitation	X	X	X	X	X			X		
9	Stipa Ditch POD Rehabilitation	X		X							
10	Stipa Ditch Overflow Diversion Rehabilitation	X		X							
11	Stipa Ditch Seepage Area Mitigation	X	X	X	X	X				X	
12	Stipa Ditch Sluffing Area Mitigation	X	X	X				X			
13	Duck Creek Bank Stabilization (AKA Flooding Mitigation for Stipa Ditch)	X		X							
14	Highland Ditch Seepage Area “A”			X							
15	Highland Ditch Seepage Area “B”		X	X		X				X	
16	Highland Ditch Seepage Area “C”		X	X	X						X
17	Highland Ditch Seepage Area “D”			X							
18	Highland Ditch Check Structure Rehabilitation “A”	X		X							
19	Highland Ditch Check Structure Rehabilitation “B”	X		X							
20	Best Ditch Conveyance Rehabilitation			X							

PROJECT NUMBER	NAME	CWA SECTION 404 AND 401	SPECIAL USE PERMITS/RIGHTS-OF-WAY/EASEMENTS	SAGE-GROUSE[1]	SECTION 106	NEPA	ENDANGERED SPECIES ACT	WY STATE ENGINEERS	USFS COORDINATION	BLM COORDINATION	STATE COORDINATION
21	West Fork New Fork River Bank Stabilization			X							
22	Shriver #2 Stockwater Well Rehabilitation	X		X				X			
23	Welborn Smith No. 1 Stockwater Well Rehabilitation			X				X			
24	Horse Corral #1 Stockwater Well Rehabilitation	X		X							
25	Welborn #1 Well Rehabilitation	X	X	X				X			X
26	Dumphy Hollow Spring Development (Stockwater)	X		X				X			
27	Noble Place Spring Development (Stockwater)	X		X				X			
28	Smith Place Spring Development (Stockwater)	X		X				X			
29	E.C. Walker Ditch POD Rehabilitation	X		X							
30	“The Seedings Meadow” Irrigation Conveyance Rehabilitation	X		X							
31	Converse Ditch Rehabilitation	X		X							
32	Martin Reservoir (Irrigation)			X							
33	Valerie Reservoir (Irrigation)			X							
34	Susan Reservoir (Irrigation)			X							
35	Annette Reservoir (Irrigation)			X							
36	New Fork No. 2 Ditch Piping		X	X		X			X		
37	Kaylou Stock Reservoir Outlet Works Rehabilitation	X		X				X			
38	Cora Butte Stockwater Well Development (AKA CL Bar Ranch Stockwater Well “A”)			X				X			
39	Thompson Butte Stockwater Well Development (AKA CL Bar Ranch Stockwater Well "B")			X				X			
40	McDowell Flats Stockwater Well Development	X		X		X		X	X		
41	Strong Ditch POD Rehabilitation	X		X							

PROJECT NUMBER	NAME	CWA SECTION 404 AND 401	SPECIAL USE PERMITS/RIGHTS-OF-WAY/EASEMENTS	SAGE-GROUSE[1]	SECTION 106	NEPA	ENDANGERED SPECIES ACT	WY STATE ENGINEERS	USFS COORDINATION	BLM COORDINATION	STATE COORDINATION
42	Marshal Bump Stockwater Well Development			X				X			
43	Well Power Supply Rehabilitation	X		X							
44	Brosman No. 2 Stockwater Well Development			X							
45	Fayette Ranch Pivot Sprinkler (AKA West Field Pivot)	X		X							
46	Coleman Pasture Stockwater Tank & Pipeline			X							
47	No Man's Land Stockwater Tank & Pipeline			X							
48	Coleman Field Spring Development (Stockwater)	X		X							
49	Miller Field Stockwater Tanks & Pipelines	X		X							
50	Miller Field Stockwater Well Rehabilitation (Solar Conversion)	X		X				X			
51	Glover Field Headgate 1	X		X							
52	Glover Field Headgate 2	X		X							
53	Glover Field Headgate 3	X		X							
54	Glover Field Headgate 4	X		X							
55	Glover Field Headgate 5	X		X							
56	Glover Field Headgate 6	X		X							
57	Glover Field Headgate 7	X		X							
58	Section 7 (34-109) Diversion Control Structure Rehab	X		X							
59	Section 12 (34-110) Diversion Control Structure Rehab	X		X							
60	Section 18 (34-109) Rock Vein Check Structure Rehab	X		X							
61	Section 19 (34-109) Diversion Control Structure Rehab	X		X							
62	Bootjack Stockwater Well Development			X				X			
63	AA Pasture Reservoir	X		X				X			

PROJECT NUMBER	NAME	CWA SECTION 404 AND 401	SPECIAL USE PERMITS/RIGHTS-OF-WAY/EASEMENTS	SAGE-GROUSE[1]	SECTION 106	NEPA	ENDANGERED SPECIES ACT	WY STATE ENGINEERS	USFS COORDINATION	BLM COORDINATION	STATE COORDINATION
64	T Pasture Reservoir	X		X				X			
65	Seedings Reservoir	X		X				X			
66	Orcutt Ditch - Change of POD	X		X				X			
67	Burgess Stockwater Well	X		X				X			
68	Dave Noble Stockwater Well			X							
69	Alexander Ditch POD Check Structure Rehab	X		X							
70	New Fork Primary Check Structure Rehab	X		X							

Note:
[1] Although it is not envisioned that sage-grouse will be an issue for every project, given that sage-grouse habitats change over time, coordination with WGFD is recommended for all projects.

6.2 Large Water Storage Project Permitting

As described in Section 4.2, three potential reservoir sites were selected for further evaluation and include Willow Lake, Site 7, and Site 9 as shown on **Figure 53**. Landownership, lead agencies, and likely permit requirements for each are listed in **Table 38**.

Table 40. Landownership, lead agencies, and likely permit requirements for the potential reservoir projects

PROJECT	LANDOWNERSHIP	LEAD NEPA AGENCY	PERMITS
Willow Lake	U.S. Forest Service (USFS)	USFS	• Section 404 Dredge and Fill Permit – U.S. Army Corps of Engineers • National Environmental Policy Act (NEPA) Compliance Process • Wyoming State Engineer's Office Permitting • Wyoming Department of Environmental Quality – National Pollution Discharge Elimination System (NPDES) Permit and Section 401 Certifications • State of Wyoming Historic Preservation Office (SHPO) Archaeological Clearance • U.S. Fish and Wildlife Service (USFWS) Coordination and Compliance
Site 7	Wyoming State Office of Lands and Investments	U.S. Army Corps of Engineers	
Site 9	U.S. Bureau of Land Management (BLM)	BLM	

7 Funding Opportunities

Multiple funding sources exist to assist with the cost of project implementation. Selection of the proper program(s) can result in a significant portion of the cost being covered by complimentary sources. **Table 39** provides a summary of funding sources that might be available to assist with project funding. Details regarding each of the funding sources in the *Upper Green Watershed Study Level I* (Sunrise Engineering 2014) are available online at: http://library.wrds.uwyo.edu/wwdcrept/Upper_Green/Upper_Green-Watershed_Study_Level_I-Final_Report-2014.html.

Table 41. Funding source summary

AGENCY/ENTITY	PROGRAM NAME	PROJECT TYPE(S)	INTERNET SITE	TELEPHONE	EMAIL
Local					
Sublette County Conservation District		Technical assistance, state and federal grant partnering, grant applications	http://www.sublettecd.com/	307-367-2257	sccd@sublettecd.com
Sublette County Weed and Pest District		Technical assistance and cost share in the control of noxious and invasive weeds	http://sublettecountyweed.com/	307-367-4728	
State					
Wyoming Department of Environmental Quality	Watershed Protection Program	Implementation of BMPs	http://deq.state.wy.us/wqd/watershed/	307-777-5985	david.waterstreet@wyo.gov
Wyoming Game and Fish Department	Riparian Habitat Improvement Grant	Stream bank protection and stabilization	http://wgfd.wyo.gov/	307-777-4600	n/a
	Water Development/ Maintenance Habitat Project Grant	Upland water development for fish and wildlife			
	Upland Development Grant	Upland habitat prescribed burns, feed plots and range seeding			
	Fish Wyoming	Public fishing			
	Wyoming Sage-Grouse Conservation Fund	Protection and enhancement of sage-grouse habitat	http://wgfd.wyo.gov/web2011/wildlife-1000382.aspx	307-777-4506	
Wyoming Office of State Lands and Investments	Regular Farm Loans	Improvements related to improving farm earning capacity	http://lands.state.wy.us/	307-777-7331	slfmail@wyo.gov
Wyoming Water Development Commission - Wyoming Water Development Office	Small Water Development Project Loans	Water development for agriculture	http://wwdc.state.wy.us/	307-777-7626	
	Water Resource Planning	Basin wide plans and master planning of water resource development			
	Groundwater Grant Program	Ground water inventory and development			

AGENCY/ENTITY	PROGRAM NAME	PROJECT TYPE(S)	INTERNET SITE	TELEPHONE	EMAIL
	New Development Program	Storage, supply, watershed and recreation projects			
	Rehabilitation Program	Rehab of old (>15yrs) water source and conveyance systems			
	Dam and Reservoir Program	New dams and expansion of existing dams			
	Small Water Project Program	Watershed condition and function, upland water, small reservoirs, wells, pipelines, springs, solar, windmills, and wetlands			
Wyoming Wildlife and Natural Resource Trust Fund		Preservation of open space, ecosystem health, water quality, wildlife habitat	http://wwnrt.wyo.gov/	307-777-8024	
Federal					
Bureau of Land Management	Riparian Habitat Management Program	Projects to maintain, restore, improve, protect, and expand riparian/wetland areas.	http://www.blm.gov/wyoming1/	307-684-1100	sdefores@blm.gov
	Range Improvement Planning and Development	Rangeland health, watershed BMPs			
Bureau of Reclamation	Water Challenge Grant	Water conservation and marketing.	http://www.usbr.gov/gp/wyao/	307-261-5671	jdallman@usbr.gov
Environmental Protection Agency	Targeted Watershed Grants Program	Riparian, wetland, aquatic, and upland habitat protection and improvement.	http://water.epa.gov/grantsfunding/twg/t	303-312-6312	
Farm Service Agency	Conservation Reserve Program (CRP)	Removal of highly erodible lands from production	http://www.fsa.usda.gov/FSA/	307-261-5231	gregor.goertz@wy.usda.gov
	Continuous Sign-Up for High Priority Conservation Practices	Riparian buffers, filter strips, grass waterways, salt tolerant vegetation, shallow water areas for wildlife, etc.			
	Emergency Conservation Program (ECO)	Emergency livestock watering conservation during severe drought.			

AGENCY/ENTITY	PROGRAM NAME	PROJECT TYPE(S)	INTERNET SITE	TELEPHONE	EMAIL
Fish and Wildlife Service	Partners for Wildlife Habitat Restoration	Various fish and wildlife habitat restoration projects	http://www.fws.gov/wyominges/	307-772-2374	genevieveskora@fws.gov
	North American Wetlands Conservation Act Program	Various wetlands conservation projects			
	Landowner Incentive Program (Non-Tribal)	Funding to WGFD to support above project types			
Natural Resources Conservation Service	Environmental Quality Incentives Program (EQUIP)	Water Quality, Land Enhancement, Water Conservation.	http://www.nrcs.usda.gov/wps/portal/nrcs/main/wy/programs/fiancial/equip/	Pinedale: 307-367-2257 #110 State: 307-233-6768	shelly.thomas@wy.usda.gov
	Watershed Protection and Flood Prevention Program	Watershed protection, floor prevention, water supply, water quality control, erosion, sediment, wetlands, fish and wildlife and recreation.	http://www.nrcs.usda.gov/wps/portal/nrcs/main/wy/programs		
	Wildlife Habitat Incentives Program (WHIP)	See websites and/or local contacts for detailed information on these programs.			
		Wildlife Habitat			Local-Jennifer.hayward@wy.usda.gov State-Shelly.thomas@wy.usda.gov
	Wetlands Reserve Program (WRP)	Wetland, soil, and wildlife habitat on private lands			
	Grassland Reserve Program (GRP)	Grazing operation support, grassland and range lands			
	Farm and Ranchlands Protection Program (FRPP)	Land conservation			
	Resource Conservation and Development (RC&D)	Conservation and development of natural resources			
	Emergency Watershed Protection (ERP)	Emergency conservation			
	Watershed Rehabilitation Program	Dam rehabilitation			

AGENCY/ENTITY	PROGRAM NAME	PROJECT TYPE(S)	INTERNET SITE	TELEPHONE	EMAIL
	Sage-Grouse Restoration Project (SGRP)	Sage-grouse related conservation and land enhancements			
	Grazing Lands Conservation Initiative (GLCI) Grants	Grazing and range health	http://prod.nrcs.usda.gov/internet/FSE_DOCUMENTS/stelprdb1043496.pdf		
	Cooperative Conservation Partnership Initiative (CCP)	Conservation of agricultural and nonindustrial forest lands	http://www.nrcs.usda.gov/wps/portal/nrcs/main/national/programs/financial/ccpi/		
	Agricultural Water Enhancement Program (AWEP)	Water resources – (Not a grant program)			
US Army Corps of Engineers	Planning Assistance to States	Planning for conservation of water and land resources, sediment control, watershed planning, water quality	http://www.nwo.usace.army.mil/Missions/RegulatoryProgram/Wyoming.aspx	307-772-2300	
	Flood Plain Management Services	Flood plain guidance and special studies			
	Flood Damage Reduction Projects	Flood control in developed areas such as Towns or Villages			
	Project Modification for Improvement of Environment	Water resource structure modifications for fish and wildlife benefit			
	Aquatic Ecosystem Restoration	Water resource development modifications for fish habitat enhancement			
	Water Resources Projects	Large projects >$10 million; levees, channels, flood plains			
USDA Forest Service	Watershed Management Program	Soil productivity, water quality, water quantity			
USDA Rural Utilities Service	Rural Utilities Program	Water and water in rural communities			

AGENCY/ENTITY	PROGRAM NAME	PROJECT TYPE(S)	INTERNET SITE	TELEPHONE	EMAIL
Private Groups					
Ducks Unlimited	n/a	Wetlands and waterfowl restoration projects	http://www.ducks.org/wyoming	307-856-4903	djgroathouse@yahoo.com
National Fish and Wildlife Foundation	Pulling Together Initiative	Weed and invasives management	http://www.nfwf.org/	503-417-8700	info@nfwf.org
	Native Plant Conservation Initiative	Restoration and preservation of native plant communities			
	Bring Back the Natives Grant Program	Restoration of riverine habitat and aquatic species			
	Five-Star Restoration Program	Wetland and riparian habitat restoration			
Trout Unlimited		Erosion control, fish habitat structures, willow and other riparian plantings, etc.	http://www.tu.org/sites/default/files/2013-14_tu_embrace-a-stream_rfp.final.pdf	307-332-7700 ex. 12	

Source: Sunrise Engineering 2014

8 Stakeholder Involvement

Stakeholder involvement for the New Fork River Watershed Level I Study involved reaching out to the public through the SWCD's Facebook site and website[7], numerous individual on-site meetings with landowners, and three formal public meetings. This section of the document briefly describes the three formal public meetings. Meeting minutes are presented in Appendix R.

On August 16, 2016 a scoping meeting was held in the Sublette County Courthouse in Pinedale, Wyoming to familiarize watershed stakeholders, landowners, and other interested parties with the scope of the project and to begin to obtain input regarding known or suspected watershed issues and/or opportunities to resolve them.

On April 12, 2017 a public meeting was held in the BLM Pinedale Field Office in Pinedale, Wyoming to provide preliminary results and discuss proposed management practices that address natural resource issues within the drainage. Watershed stakeholders came to the meeting with numerous water project ideas.

Finally, an additional public meeting was held on June 12, 2017 in the Hampton Inn in Pinedale, Wyoming to further discuss project results and the New Fork River Water Right & Conveyance Mapping Tool ("New Fork WRCMT") that was developed to provide watershed stakeholders with easy access to water rights information in the New Fork River watershed.

9 Conclusions and Recommendations

The water resources in the New Fork River watershed in Sublette County, Wyoming, were inventoried and evaluated to support the Wyoming Water Development Commission and Sublette County Conservation District with the identification and implementation of future water-development opportunities. The New Fork River Watershed, Level I Study provides the foundation for development of a Watershed Management and Rehabilitation Plan and includes the following components:

- An Inventory and evaluation of the watershed with emphasis on surface water quantity and quality in addition to upland and riparian conditions.
- A Rosgen Level 1 geomorphic classification of the major tributaries in the study area to identify unstable reaches and improvement options to restore channel stability.
- An assessment of existing irrigation systems.
- An evaluation of existing surface water features, storage requirements, and potential opportunities to improve water availability for livestock, wildlife, and other uses.

The Watershed Management and Rehabilitation Plan includes conceptual designs and cost estimates, identifies the necessary permits, approvals, potential funding sources for 27 irrigation projects, 20 wildlife/livestock water projects, 7 small water storage projects, and 3 large water storage projects (reservoirs that would provide greater than 3,600 acre-feet of storage if implemented).
The Level 1 study also includes a digital library, a project GIS, and the New Fork River Water Right & Conveyance Mapping Tool ("New Fork WRCMT"). The digital library is an electronic collection of documents pertaining to this project to facilitate improved access to the information so it can be used in

[7] http://www.sublettecd.com/pid/86/wateshed-studies.aspx

current and future planning, permitting and improvement efforts in the watershed. The project GIS contains a collection of all the spatial data collected or generated during the preparation of this study. The New Fork WRCMT contains water rights information, and it was developed to provide watershed stakeholders with easy access to water rights information in the New Fork River watershed.

In keeping with direction provided by the project sponsor (i.e., SCCD), this document is intended to facilitate future implementation of water related projects in the New Fork River watershed. The next step for watershed stakeholders will be to obtain funding to finalize designs and begin implementation. The project GIS and the New Fork WRCMT can be used in combination with the conceptual designs and cost estimates packaged in Appendix N (Conceptual Designs and Cost Estimates – Small Water Projects) to expedite this process.

10 References

Arnett, Melanie, Data Coordinator, Wyoming Natural Diversity Database. 2016, August 10. Transmitted Wyoming Natural Diversity Database records for the New Fork River Watershed to Ron Steg, Tetra Tech, Inc., via electronic mail.

Association of State Dam Safety Officials. 2017. Accessed August 22, 2017. https://damsafety.org/wyoming.

Banner (J.T. Banner & Associates, Inc.) 1969. *Report on Preliminary Reconnaissance of Potential Reservoirs, Green River Basin, Wyoming*. Department of Economic Planning and Development and Wyoming Water Planning Program, State Engineer's Office, Cheyenne.

BLM (Bureau of Land Management). 2008. *Proposed Resource Management Plan and FINAL Environmental Impact Statement for Public Lands Administered by the Bureau of Land Management Pinedale Field Office Pinedale.* Bureau of Land Management, Cheyenne, WY.

Carlisle, J., and S. Coates. 2016. *Evaluation of Long-Billed Curlew Reproductive Success, Migration, and Habitat Use*. Draft. Intermountain Bird Observatory, Boise State University, Boise, ID.

Dugger, B.D., and K.M. Dugger. 2002. Long-billed Curlew *(Numenius americanus). In* The Birds of North America, No. 628 (A. Poole and F. Gill, Eds.). Academy of Natural Sciences, Philadelphia, Pennsylvania and American Ornithologists' Union, Washington, DC.

Dunne, T., and L.B. Leopold. 1978. *Water in Environmental Planning*. W.H. Freeman and Company, San Francisco, CA.

Freudenthal, D. 2008. Executive Order 2008-2: *Greater Sage-Grouse Core Area Protection*. Wyoming Office of the Governor, Cheyenne, WY.

———. 2015. Executive Order 2015-4: *Greater Sage-Grouse Core Area Protection*. Wyoming Office of the Governor, Cheyenne, WY.

Gordian Group. 2017. *Heavy Construction Costs with RSMeans Data: 2017*. Gordian RSMeans Data Construction Publishers & Consultants, Rockland, MA.

Hestmark, Martin, Assistant Regional Administrator, Office of Ecosystems Protection and Remediation, U.S. Environmental Protection Agency. 2015, December 15. Letter to Joan Miles, Montana Board of Environmental Review, regarding EPA Approval of Montana's Water Quality Standards for EC and SAR.

Hunt, C.B. 1967. *Physiography of the United States*. W.H. Freeman and Company, San Francisco, CA.

Kleinfelder, Inc. 2007. *Upper Green River Storage, Level II Study*. Wyoming Water Development Commission, Cheyenne, WY.

Knight J.F., J. Corcoran, L. Rampi, B. Tolcser, and M. Voth. 2009. *Wetland Mapping Methods for the Twin Cities Metropolitan Area*. University of Minnesota, Remote Sensing and Geospatial Analysis Laboratory Department of Forest Resources, St. Paul, MN.

LANDFIRE. 2017. Existing Vegetation Type Layer, LANDFIRE 1.1.0, U.S. Department of the Interior, U.S. Geological Survey. Accessed January 5, 2017. http://landfire.cr.usgs.gov/viewer/.

NOAA (National Oceanic and Atmospheric Administration). 2016. Daily Observational Data Map. GHCN daily climate data summaries. Accessed September 7, 2016. https://gis.ncdc.noaa.gov/maps/ncei/cdo/daily.

NRCS (Natural Resources Conservation Service). 2011. Ecological Site Information System (ESIS) Database - ESD User Guide. Revision Date: 1-04-2011. Accessed April 20, 2017. https://esis.sc.egov.usda.gov/Welcome/pgESDWelcome.aspx

_____. 2016a. *Major Land Resource Regions Custom Report*. U.S. Department of Agriculture's Agriculture Handbook 296. Accessed April 20, 2017. https://www.nrcs.usda.gov/wps/portal/nrcs/detail/soils/home/?cid=nrcs142p2_053624.

———. 2016b. Snow Telemetry (SNOTEL) and Snow Course Data and Products. SNOTEL climate data retrieved through Wyoming Water and Climate Atlas (WyWCW). Accessed September 7, 2016. http://www.wrds.uwyo.edu/Map/#.

———. 2017. *Ecological Site Description (ESD) System for Rangeland and Forestland Data*. U.S. Department of Agriculture, NRCS, Ecological Site Description. Accessed April 20, 2017. https://esis.sc.egov.usda.gov/Welcome/pgReportLocation.aspx?type=ESD.

Patla, S. 2014. *Upper Green River Wetland Core Complex Regional Wetland Conservation Plan*. Prepared for the Wyoming Bird Habitat Conservation Partnership, Wyoming Game and Fish Department, Cheyenne, WY.

PRISM Climate Group. 2012. *1981-2010 Annual Average Precipitation by State*. Oregon State University. Retrieved from Natural Resources Conservation Service Geospatial Data Gateway. Accessed on September 7, 2016. https://gdg.sc.egov.usda.gov/.

Raisbeck, M.F., S.L. Riker, C.M. Tate, R. Jackson, M.A. Smith, and J.R. Zygmunt. n.d. *Water Quality for Wyoming Livestock & Wildlife - A Review of the Literature Pertaining to Health Effects of Inorganic Contaminants.* University of Wyoming Department of Veterinary Sciences B-11823. University of Wyoming Department of Veterinary Science and Department of Renewable Resources, WGFD, and WDEQ. Accessed April 20, 2017. http://www.wyomingextension.org/agpubs/pubs/B1183.pdf.

Rio Verde Engineering. 1980. *Rehabilitation of Fremont Lake Dam*. Wyoming Water Development Commission, Cheyenne, WY.

———. 1999. *Fayette Irrigation District Rehabilitation Project*. Wyoming Water Development Commission, Cheyenne, WY.

———. 2007. *Boulter Lake Enlargement, Level II Study*. Wyoming Water Development Commission, Cheyenne, WY.

RJH Consultants. 2017. *Feasibility Study Report - New Fork Lake Dam Enlargement, Level II, Phase I Study*. Wyoming Water Development Commission, Cheyenne, WY.

Rosgen, D.L., and H.L. Silvey. 1996. *Applied River Morphology*. Wildland Hydrology Books, Fort Collins, CO.

Sawyer, H., M. Hayes, B. Rudd, and M.J. Kauffman. 2014. *The Red Desert to Hoback Mule Deer Migration Assessment*. University of Wyoming, Wyoming Migration Initiative, Laramie.

Sexauer, Hilda, Regional Fisheries Supervisor, Wyoming Game and Fish Department. 2016, November 21. Transmitted Wyoming Game and Fish Department Stream Lake Database results to Ron Steg, Tetra Tech, Inc. via electronic mail.

States West (States West Water Resources Corporation). 2001a. *Green River Basin Water Planning Process*. Wyoming Water Development Commission Basin Planning Program, Cheyenne, WY.

———. 2001b. *Green River Ground Water Recharge and Alternative Storage, Level 1 Project*. Wyoming Water Development Commission, Cheyenne, WY.

———. 2002. *Final Report for the Green River ASR and Alternative Storage Project – Church Reservoir Investigation*. Wyoming Water Development Commission, Cheyenne, WY.

Strahler, A.H. 1952. Hypsometric (area-altitude) analysis of erosional topology. *Geological Society of America Bulletin* 63(11):1117–1142.

———. 1957. Quantitative analysis of watershed geomorphology. *Transactions of the American Geophysical Union* 38(6):913–920.

Sunrise Engineering, et al. 2014. *Upper Green Watershed Study, Level I*. Developed for the Wyoming Water Development Commission and Sublette County Conservation District. Wyoming Water Development Commission, Cheyenne, WY.

Tibbets, T.M., H.E. Copeland, L. Washkoviak, S. Patla, and G. Jones. 2015. *Wetland Profile and Condition Assessment of the Upper Green River Basin, Wyoming*. Report to the U.S. Environmental Protection Agency. The Nature Conservancy–Wyoming Chapter, Lander, WY.

USFS (U.S. Forest Service). 2017. *Bridger–Teton National Forest Wilderness*. https://www.fs.usda.gov/detail/btnf/recreation/?cid=stelprdb5343268. Accessed April 19, 2017.

USFWS. 2016. *Wetland Mapper*. National Wetland Inventory for Wyoming dated 9/27/2016. Accessed January 7, 2017. https://www.fws.gov/wetlands/Data/Mapper.html.

USGS (U.S. Geological Survey). 1981. *Guidelines for Determining Flood Flow Frequency*. Bulletin #17B of the Hydrology Subcommittee, Interagency Advisory Committee on Water Data, U.S. Department of Interior, U.S. Geologic Survey, Reston, VA.

———. 2006. Quaternary Fault and Fold Database for the United States–Leckie Fault. Accessed December 8, 2016. https://geohazards.usgs.gov/cfusion/qfault/show_report_AB.cfm?fault_id=775&section_id.

WDEQ (Wyoming Department of Environmental Quality). 2011. *Wyoming Department of Environmental Quality Water Quality Division WYPDES (Wyoming Pollutant Discharge Elimination System) Program Statement of Basis.* WY0020656-RENEWAL-6-6-2011. Obtained online October 21, 2016. http://deq.state.wy.us/wqd/WYPDES_Permitting/WYPDES_PNs_and_appr_permits/FinalPermits_Apps/FP_0020001-0025000/WY0020656_fp_REN-town%20of%20pinedale-9-30-11%20oct.pdf.

———. 2012. *Wyoming Department of Environmental Quality Water Quality Division WYPDES (Wyoming Pollutant Discharge Elimination System) Program Statement of Basis.* WY0000094 RENEWAL-6-25-2012. Obtained online October 21, 2016. http://deq.state.wy.us/wqd/WYPDES_Permitting/WYPDES_PNs_and_appr_permits/FinalPermits_Apps/FP_0000001-0010000/WY0000094_fp_REN-wygame&fish-2-26-13%20feb.pdf.

———. 2013. *Chapter 1. Wyoming Surface Water Quality Standards*. Document 9176. Effective date September 24, 2013. Accessed September 3, 2016. http://soswy.state.wy.us/Rules/RULES/9176.pdf.

———. 2014a. *Wyoming's 2014 Integrated 305(b) and 303(d) Report*. Document 16-0126. WDEQ, Water Quality Division, Watershed Section. Cheyenne. Accessed February 25, 2016. http://sgirt.webfactional.com/media/attachments/Water%20Quality/Water%20Quality%20Assessment/Reports/2014-Integrated-305b-and-303d-Report.pdf.

———. 2014b. *Wyoming Department of Environmental Quality Water Quality Division WYPDES (Wyoming Pollutant Discharge Elimination System) Program Statement of Basis*. WY0054224-RENEWAL-8-29-14. Obtained online October 21, 2016. http://deq.state.wy.us/wqd/WYPDES_Permitting/WYPDES_PNs_and_appr_permits/FinalPermits_Apps/FP_0054001-0056000/WY0054224_fp_REN-anticline-3-30-15.pdf.

WGFD (Wyoming Game and Fish Department). 2010. *Wyoming State Wildlife Action Plan*. Wyoming Game and Fish Department, Cheyenne, WY.

———. 2014. *Access to Wyoming's Wildlife Wildlife Habitat Management Areas*. Accessed April 19, 2017. https://wgfd.wyo.gov/accessto/whmas.asp.

———. 2016. *2016 Species of Greatest Conservation Need*. Accessed November 21, 2016. https://wgfd.wyo.gov/WGFD/media/content/PDF/Habitat/SWAP/SGCN_2017List.pdf.

Whitehead, R.L. 1996. *Groundwater Atlas of the United States, Hydrologic Investigations Atlas 730-I*. U.S. Geological Survey, Reston, VA.

WRCC (Western Regional Climate Center). 2016a. *Climate of Wyoming*. Accessed April 19, 2017. http://www.wrcc.dri.edu/narratives/wyoming/.

———. 2016b. *Cooperative Climatological Data Summaries.* NOAA NWS COOP station summaries. Accessed on September 7, 2016. http://www.wrds.uwyo.edu/Map/#.

WWDC (Wyoming Water Development Commission). 2007. *Green River Basin: Summary of Potential Dam and Reservoir Project Literature*. Wyoming Water Development Commission, Cheyenne.

———. 2017. *Operating Criteria of the Small Water Project Program of the Wyoming Water Development Program*. Accessed August 22, 2017. http://wwdc.state.wy.us/small_water_projects/SWPPopCriteria.html.

Wyoming State Engineer's Office. 1970. *Wyoming Water Planning Program, Report No. 3–Water and Related Land Resources of the Green River Basin, Wyoming*. Wyoming Water Planning Program, Wyoming Water Development Commission, Cheyenne, WY.

———. 2017. State Engineer's Office e-Permit system. Accessed 2017. http://seoweb.wyo.gov/e-Permit/Common/Home.aspx.

Appendix A.
Digital Library

To obtain a copy of this information please contact:

Wyoming Water Development Commission
6920 Yellowtail Rd
Cheyenne, WY 82002
(307) 777-7626

or

University of Wyoming
Water Resources Data System
Dept. 3943
1000 E. University Ave
Laramie, WY 82071
(307) 766-6651
wrds@uwyo.edu

Appendix B.
GIS Geodatabase

To obtain a copy of this information please contact:

Wyoming Water Development Commission
6920 Yellowtail Rd
Cheyenne, WY 82002
(307) 777-7626

or

University of Wyoming
Water Resources Data System
Dept. 3943
1000 E. University Ave
Laramie, WY 82071
(307) 766-6651
wrds@uwyo.edu

Appendix C.
Special Designated Areas

Contents

C.1 Designated Wilderness 3
C.2 Wilderness Study Areas 3
C.3 Special Recreation Management Areas 4
C.3.1 Scab Creek SRMA 4
C.3.2 Boulder Lake SRMA 4
C.3.3 CCC Ponds Recreation Area 4
C.3.4 Green and New Fork Rivers - Lower Zone SRMA 4
C.4 Areas of Critical Environmental Concern 5
C.4.1 New Fork Potholes ACEC 5
C.4.2 Trappers Point ACEC 5
C.5 BLM Special Management Areas 6
C.5.1 Wind River Front Management Area (BLM) 6
C.5.2 Ross Butte Ecosystem Management Area 6
C.6 Wildlife Habitat Management Areas 6
C.6.1 Half Moon Lake Wildlife Habitat Management Area 7
C.6.2 Soda Lake Wildlife Habitat Management Area 7
C.6.3 Fall Creek Wildlife Habitat Management Area 7
C.7 References 7

Abbreviations and Acronyms

ACEM	Areas of Critical Environmental Concern
BLM	U.S. Bureau of Land Management (U.S. Department of the Interior)
CCC	Civilian Conservation Corps
FLPMA	*Federal Land Policy Management Act*
SMRA	Special Recreation Management Area
USFS	U.S. Forest Service (U.S. Department of Agriculture)
WSA	wilderness study area

C.1 Designated Wilderness

Wilderness, as defined by the *Wilderness Act of 1964*, is an area of undeveloped federally owned land, designated by Congress that has the following characteristics:

- It is affected primarily by the forces of nature, where man is a visitor who does not remain. It may contain ecological, geological or other features of scientific, educational, scenic or historic value.
- It possesses outstanding opportunities for solitude and a primitive or unconfined type of recreation.
- It is an area large enough so that continued use will not change its unspoiled, natural condition.
- It provides the opportunity for (and often requires) self-reliance and challenge (Bridger–Teton National Forest).

The Bridger Wilderness is located along the Continental Divide on the west slope of the Wind River Range within the New Fork River watershed. It was designated a *primitive area* under U.S. Department of Agriculture regulations in 1931, and was later made part of the National Wilderness Preservation System with passage of the *Wilderness Act in 1964*. In 1984, its original 392,169-acre area was increased by 36,000 acres when the *Wyoming Wilderness Act* was signed into law (Bridger–Teton National Forest 2017). The Bridger Wilderness is administered by the Pinedale Ranger District of the Bridger–Teton National Forest.

C.2 Wilderness Study Areas

In 1964 the Congress passed the *Wilderness Act*, establishing a national system of lands for the purpose of preserving a representative sample of ecosystems in a natural condition for the benefit of future generations. Until 1976, most land considered for and designated as wilderness was managed by the U.S. Forest Service (USFS) and National Park Service. With the passage of *Federal Land Policy Management Act* (FLPMA) in 1976, the Congress directed the Bureau of Land Management (BLM) to inventory, study, and recommend which public lands under its administration should be designated wilderness.

In the interim, between the inventory that identified suitable and eligible areas appropriate for wilderness designation and the actual congressional designation of a wilderness, BLM must manage the potential wilderness. BLM manages these potential wilderness areas as wilderness study areas (WSAs). During the time that the Congress considers an area for wilderness, which can be many years, designated WSAs require special management practices to preserve the wilderness characteristics that make the areas appropriate for designation. WSAs, established under the authority of Section 603(c) of FLPMA, are managed to preserve their wilderness values according to the Interim Management Policy and will continue to be managed in that manner until the Congress either designates them as wilderness or releases them for other uses. Only the Congress can designate or release Section 603 WSAs, and their status will not change as a result of the BLM planning process.

Scab Creek has been designated as a WSA within the New Fork River wilderness (BLM 2008). This area was originally established and managed as a *primitive area* in 1975. In April 1985 the Scab Creek Instant Study Area was proposed by President Ronald Reagan for addition to the National Wilderness Preservation System. The Scab Creek WSA adjoins the Bridger Wilderness in the Bridger–Teton National Forest, which lies to the east. Scab Creek WSA offers extraordinary natural wilderness features and ample

opportunity for solitary wilderness experiences. The area was withdrawn from locatable mineral availability in 1970.

C.3 Special Recreation Management Areas

A *Special Recreation Management Area* (SRMA) is an area with a commitment to provide specific recreational activities and opportunities. These areas usually require a high level of recreational management (BLM 2008).

C.3.1 Scab Creek SRMA

The Scab Creek SRMA (18,460 acres) is located on the eastern boundary of the planning area, along the lower slopes of the Wind River Range and adjacent to the Bridger Wilderness area. This area provides a wide range of recreational uses, including camping, horseback riding, rock-climbing, hunting, and fishing. Facilities such as horse corrals, horse-loading docks, camping areas, road access and trailhead parking areas, toilets, and fire rings are provided outside the WSA. The Scab Creek SRMA is heavily used by the public in the summer and fall. The area is closed to human presence in the winter months as a result of elk feeding activities at the Scab Creek Elk Feedground. The area includes 2 miles of developed trail (Scab Creek Trail) and 4 miles of undeveloped trail. The area is consistently used by the National Outdoor Leadership School to teach rock climbing, wilderness camping, and cross-country skiing.

C.3.2 Boulder Lake SRMA

Boulder Lake SRMA (5,790 acres) encompasses approximately 3 miles of the shoreline of Boulder Lake and the surrounding area. The SRMA is located approximately 8 miles north of the town of Boulder and provides two campgrounds on the north and south sides of the lake. The north campground consists of picnic tables, grills, a toilet, and an undeveloped boat launch site. The south campground consists of several undesignated campsites, picnic tables, a toilet, and a fully developed boat ramp facility. The area, which is used heavily during the summer and fall, is a popular destination for boaters, fishermen, hunters, and campers. A third campground, called Stokes Crossing, is along Boulder Creek west of the lake. This campground consists of undesignated campsites, picnic tables, and a toilet.

C.3.3 CCC Ponds Recreation Area

During the Great Depression, the Civilian Conservation Corps (CCC) had a camp on the south end of Fremont Lake. The CCC's project was to construct an irrigation ditch to serve the county and some ponds to retain water. Through the cooperative efforts of the Pinedale Middle School, USFS, Sublette County Conservation District, and BLM, today this area has been set aside as a local recreation haven. Recreational opportunities in the area include hiking, fishing, wildflower and wildlife viewing, and mountain biking. The Pinedale Pedestrian Pathway connects the area to Pinedale. Mule deer also cross through this bottleneck as they migrate across the south end of Fremont Lake. Beautiful mountain views are a backdrop to this glacial landscape.

C.3.4 Green and New Fork Rivers - Lower Zone SRMA

The portion of the Green and New Fork Rivers SRMA within the New Fork River watershed comprises the BLM-administered land within one-quarter mile on each side of the Green and New Fork rivers from about U.S. Highway 191 downstream to the Fontenelle Reservoir (approximately 110 Green River miles and New Fork River miles). This zone provides important opportunities for the public to enjoy a wide

variety of recreational activities associated with public land and waters. A combination of BLM, private, and Wyoming state lands provide public access in this zone. Public river accesses vary widely from undeveloped to constructed boat ramps with associated user amenities. The majority of developed public accesses in this zone is provided through the cooperative efforts of BLM, Wyoming Game and Fish Department, and private landowners. Developed river accesses typically include boat ramps, restrooms, vehicle parking, user information, and camping facilities.

The Management Objective is to manage each zone to provide opportunities for the public to achieve targeted, high-quality recreation activities and experiences that produce significant benefits to the visiting public.

C.4 Areas of Critical Environmental Concern

Areas of Critical Environmental Concern (ACEC) contain one or more resources that require special management and protection for maintaining the value of the resource and the area. Areas designated as ACECs may contain resources such as rare or sensitive archeological resources; habitat for endangered, sensitive, or threatened species; or rare geologic features (BLM 2008).

ACEC designations indicate areas for which special management attention is necessary for protecting and preventing irreparable damage to important historic, cultural, and scenic values; for protecting fish or wildlife resources or other natural systems or processes; or for protecting human life and safety from natural hazards. Management is considered special if it is unique to the area and includes terms and conditions designed specifically to protect the values in the ACEC.

BLM recognizes that an ACEC has significant values and establishes special management measures to protect those values. The designation is a reminder that significant values exist that must be accommodated when future management actions and land use proposals are considered in the ACEC. Designation may also support a funding priority. The designation of ACECs is achieved only through the resource management planning process, either in a Resource Management Plan or in a plan amendment. There are two ACECs within the New Fork River watershed; the New Fork Potholes and Trappers Point.

C.4.1 New Fork Potholes ACEC

This unique subsection of the Wind River Front contains nearly 100 glacial potholes, which are depressions formed by huge blocks of ice stranded in a field of glacial outwash materials. Upon melting, these blocks left depressions in the landscape, which today remain in the form of small lakes. Abundant waterfowl use the ecosystem for nesting and brood-rearing and as a stopover point in their migrations. Reintroduction efforts for the trumpeter swan have been attempted in the past. Riparian vegetation surrounds the potholes, providing habitat for various wildlife, including neotropical birds, elk, deer, and moose. A portion of the region serves as crucial elk winter range.

C.4.2 Trappers Point ACEC

Trapper’s Point is a major funnel, or bottleneck, for mule deer and pronghorn in their migrations to and from winter range. The bottleneck is formed by the Green River to the west and the New Fork River agricultural lands to the east. A recent upswing in residential development to the east compounds the definition and constriction of the bottleneck. The Upper Green River Cattle Association relies on this area for movement of cattle from desert to forest allotments and back. This tradition has occurred for almost 100 years. Going back further in time, one of the most significant archaeological sites within the planning

area is in the heart of the bottleneck, attesting to its long tradition with pronghorn. The Trapper's Point Site, 48SU301, is a pronghorn kill and butchering site more than 6,000 years old. Numerous other cultural sites are concentrated in the area.

C.5 BLM Special Management Areas

Special Management Areas are a locally generated identification designed to flag locations which have specialized management concerns or needs but did not warrant ACEC designation. Generally, the SMAs contain resources or opportunities that warrant a level of management narrowly focused on a localized resource (e.g., wildlife, vegetation) or resource use concern (BLM 2008). There are two such areas in the New Fork River watershed: Wind River Front Management Area and Ross Butte Management Area.

C.5.1 Wind River Front Management Area (BLM)

This landscape was formed by Pleistocene glacial events that formed world-class geologic features, including terminal and lateral moraines and potholes. Unique to this landscape are huge boulders randomly scattered across a backdrop of rolling sagebrush foothills. Several streams intersect this area with Wild and Scenic River values, including three that meet the criteria for inclusion as Wild and Scenic River segments (see related section below). Semiprimitive motorized and nonmotorized recreation opportunities include hunting, rock climbing, wilderness trailheads, sightseeing, antler hunting, hiking, mountain biking, and fishing. The Wind River Front, which lies in the foreground of the Bridger Wilderness and its Class I airshed, encompasses migration corridors for big game and for crucial winter ranges for moose, elk, and mule deer. It also supplies wintering and breeding habitats for sage-grouse.

The management goals for this area are to maintain the visual, recreation, and air quality resources in the management area, enhance wildlife habitat, and protect the integrity of the U.S. Air Force Detachment 489 Seismic Monitoring Station.

C.5.2 Ross Butte Ecosystem Management Area

Ross Butte and Ross Ridge are located along Wyoming Highway 351 in the central portion of the planning area. The Ross Butte ecosystem in this area provides habitat for many endemic plant species, including Big Piney milkvetch, Beaver Rim phlox, large-fruited bladderpod, and desert glandular phacelia (Fertig and Beauvais 1999). The *Plant Species of Special Concern of the Ross Butte Ecosystem* report contains the recommendation: "The Ross Butte ecosystem contains one of the highest known concentrations of regionally endemic basin plant species in southwestern Wyoming. Given the growing pressures to develop natural gas and oil resources in southwest Wyoming, the Ross Butte area stands out as a significant potential conservation site."

The management goals for this area are to protect fragile soils and watersheds, sensitive plant species and communities, paleontological and archeological sites, unique geology, and visual values in the Ross Butte area.

C.6 Wildlife Habitat Management Areas

There are three *Wildlife Habitat Management Areas* managed by the Wyoming Game and Fish Department within the New Fork River watershed.

C.6.1 Half Moon Lake Wildlife Habitat Management Area

The Half Moon Wildlife Habitat Management Area is six miles east of Pinedale and provides quality winter range for up to 700 elk and a large population of mule deer. Vegetative communities consist mostly of sagebrush grasslands and conifer forests atop Half Moon Mountain. Besides providing habitat for elk and deer, Half Moon is home to pronghorn antelope, sage-grouse, moose, rabbits, coyotes, and many songbirds. The area provides access to adjacent USFS lands where additional recreational opportunities exist.

C.6.2 Soda Lake Wildlife Habitat Management Area

This 3,750-acre wildlife habitat management area was established in 1948 as part of a series of elk feedgrounds created to provide winter forage and reduce damage to private haystacks. Soda Lake is on the west side of the Wind River Range and is home for 800 elk that are fed from horse-drawn sleighs from December to April each year. In addition, native plants at Soda Lake and adjacent public lands provide spring and fall grazing for elk and many other wildlife species. Soda Lake, totaling 370 acres, along with adjoining wetlands, attracts many species of waterfowl and other birds. Many wildlife species live in Soda Lake area, because of the habitat diversity. The Soda Lake area provides access to the Bridger Wilderness, as well as the Bridger–Teton National Forest, the largest forest in the lower 48 states.

C.6.3 Fall Creek Wildlife Habitat Management Area

The Fall Creek Wildlife Habitat Management Area is southeast of Pinedale and provides quality winter range for up to 700 elk and a large population of mule deer. Vegetative communities on the over 600 acres consist mostly of sagebrush grasslands. Besides providing habitat for elk and deer, Fall Creek is home to pronghorn antelope, sage-grouse, moose, rabbits, coyotes, and many songbirds. The area provides access to adjacent USFS lands where additional recreational opportunities exist.

C.7 References

BLM (Bureau of Land Management). 2008. *Proposed Resource Management Plan and FINAL Environmental Impact Statement for Public Lands Administered by the Bureau of Land Management Pinedale Field Office Pinedale*. Bureau of Land Management, Cheyenne, WY.

Fertig, W. and G. Beauvais. 1999. *Wyoming Plant and Animal Species of Special Concern.* Wyoming Natural Diversity Database, Laramie, WY.

USFS (U.S. Forest Service). 2017. *Bridger–Teton National Forest Wilderness.* https://www.fs.usda.gov/detail/btnf/recreation/?cid=stelprdb5343268. Accessed February 4, 2017.

WGFD (Wyoming Game and Fish Department). 2017. *Access to Wyoming's Wildlife – Wildlife Habitat Management Areas.* Accessed February 4, 2017. https://wgfd.wyo.gov/accessto/whmas.asp.

Appendix D.
Inventoried Archaeological Sites

This page is left intentionally blank.

SITE ID	TYPE	ELIGIBILITY STATUS
48SU34	P - Lithic Scatter	Unknown
48SU35	*No Information*	Unknown
48SU60	*No Information*	Unknown
48SU64	P - Artifacts and Features - Habitation - Hearths/FCR	Unknown
48SU72	H - Cabin	Eligible
48SU110	P - Lithic Scatter	Unknown
48SU154	P - Hearth, Firepit, FCR	Not Eligible
48SU155	P - Artifacts and Features - Chipping/Knapping - Hearths/FCR	Eligible
48SU156	P - Open Camp, Occupation	Unknown
48SU157	P - Lithic Scatter	Not Eligible
48SU158	P - Lithic Scatter	Unknown
48SU159	P - Lithic Scatter	Not Eligible
48SU160	P - Lithic Scatter	Unknown
48SU161	P - Lithic Scatter	Not Eligible
48SU162	P - Lithic Scatter	Not Eligible
48SU163	H - Cabin	Not Eligible
48SU167	P - Lithic Scatter	Not Eligible
48SU186	P - Lithic Scatter	Unknown
48SU190	P - Lithic Scatter	Eligible
48SU199	P - Lithic Scatter/Chipping/Knapping Station	Not Eligible
48SU200	P - Lithic Scatter - Lithic Procurement - Secondary	Not Eligible
48SU201	P - Feature - Habitation - Hearths/FCR	Not Eligible
48SU202	P - Open Camp, Occupation	Not Eligible
48SU203	P - Artifacts and Features - Lithic Procurement - Secondary - Hearths/FCR	Not Eligible
48SU204	P - Lithic Scatter - Lithic Procurement - Secondary	Not Eligible
48SU205	P - Artifacts and Features - Chipping/Knapping - Hearths/FCR	Not Eligible
48SU215	P - Artifacts and Features - Habitation - Rockshelter	Eligible
48SU217	M/C - Open Camp/Historic Site	Eligible
48SU225	P - Artifacts and Features - Habitation - Hearths/FCR	Not Eligible
48SU227	P - Lithic Scatter/Chipping/Knapping Station	Not Eligible
48SU228	P - Hearth, Firepit, FCR	Not Eligible
48SU229	P - Artifacts and Features - Chipping/Knapping - Hearths/FCR	Eligible
48SU237	M/C - Historic Cairn	Unknown
48SU241	P - Artifacts and Features - Habitation - Hearths/FCR	Unknown
48SU245	P - Artifacts and Features - Habitation - Hearths/FCR	Eligible
48SU246	P - Artifacts and Features - Habitation - Hearths/FCR	Unknown
48SU247	P - Artifacts and Features - Habitation - Hearths/FCR	Unknown
48SU260	P - Artifacts and Features - Chipping/Knapping - Hearths/FCR	Not Eligible
48SU261	P - Artifacts and Features - Habitation - Hearths/FCR	Eligible
48SU262	P - Artifacts and Features - Chipping/Knapping - Hearths/FCR	Eligible
48SU263	P - Artifacts and Features - Chipping/Knapping - Hearths/FCR	Not Eligible
48SU264	P - Artifacts and Features - Chipping/Knapping - Hearths/FCR	Eligible
48SU270	P - Feature - Habitation - Hearths/FCR	Eligible
48SU271	P - Feature - Habitation - Hearths/FCR	Not Eligible
48SU272	P - Feature - Habitation - Hearths/FCR	Eligible
48SU273	P - Feature - Habitation - Hearths/FCR	Eligible

FCR = fire-cracked rock; H = historic; M/C = multicomponent, prehistoric and historic; P = prehistoric

SITE ID	TYPE	ELIGIBILITY STATUS
48SU274	P - Feature - Habitation - Hearths/FCR	Eligible
48SU275	P - Artifacts and Features - Habitation - Hearths/FCR	Eligible
48SU277	H - Ranching - Cattle Ranch	Unknown
48SU280	P - Lithic Scatter	Unknown
48SU283	P - Hearths, FCR/Lithic Scatter	Unknown
48SU326	P - Open Camp, Occupation	Unknown
48SU327	P - Open Camp, Occupation	Unknown
48SU328	P - Lithic Scatter	Unknown
48SU329	P - Lithic Scatter	Unknown
48SU330	P - Open Camp, Occupation	Eligible
48SU331	P - Hearth, Firepit, FCR	Unknown
48SU332	P - Composite Scatter - Chipping/Knapping	Eligible
48SU333	P - Open Camp, Occupation	Eligible
48SU334	P - Lithic Scatter	Unknown
48SU335	P - Lithic Scatter	Unknown
48SU336	P - Open Camp, Occupation	Unknown
48SU344	P - Quarry, Lithic Source	Unknown
48SU345	P - Open Camp, Occupation	Unknown
48SU346	P - Open Camp, Occupation	Unknown
48SU350	P - Artifacts and Features - Chipping/Knapping - Hearths/FCR	Eligible
48SU351	P - Stone Circle	Unknown
48SU352	P - Stone Circle	Unknown
48SU356	P - Open Camp, Occupation	Eligible
48SU360	P - Open Camp, Occupation	Unknown
48SU365	P - Open Camp, Occupation	Unknown
48SU374	P - Open Camp/Quarry	Unknown
48SU375	P - Lithic Scatter - FCR - Habitation	Unknown
48SU376	P - Lithic Scatter - FCR - Habitation	Unknown
48SU377	M/C - Historic Debris	Unknown
48SU379	P - Open Camp, Occupation	Eligible
48SU380	P - Lithic Scatter - Milling/Vegetable Processing	Unknown
48SU387_33	H - Overland Migration - Trail	Eligible
48SU391	P - Lithic Scatter	Unknown
48SU392	P - Lithic Scatter	Unknown
48SU393	P - Open Camp, Occupation	Eligible
48SU413	H - Tourism - Dude Ranch	NRHP-listed
48SU414	H - Cabin	Unknown
48SU415	H - Cabin	Unknown
48SU416	H - Cabin	Unknown
48SU419	H - Site	Unknown
48SU422_9	H - Road	Eligible
48SU428	H - Building	Not Eligible
48SU438	H - Recreation Building	NRHP-listed
48SU439	H - Urban - Building	NRHP-listed
48SU445	H - Ranching - Homestead	Unknown
48SU446	H - Ranching - Cattle Ranch	NRHP-listed

FCR = fire-cracked rock; H = historic; M/C = multicomponent, prehistoric and historic; P = prehistoric

SITE ID	TYPE	ELIGIBILITY STATUS
48SU451	H - Ranching - Cattle Ranch	Eligible
48SU476	H - Ranching - Cattle Ranch	Unknown
48SU480	H -Site	Unknown
48SU481	H - Timber - Building	Eligible
48SU482	H - Ranching - Cattle Ranch	Unknown
48SU486	P - Feature - Habitation - Hearths/FCR	Eligible
48SU494	P - Artifacts and Features - Milling/Vegetable Processing - Hearths/FCR	Eligible
48SU510	P - Artifacts and Features - Habitation - Hearths/FCR	Eligible
48SU541	P - Lithic Scatter - Use Unknown	Unknown
48SU596	P - Lithic Scatter	Unknown
48SU597	P - Open Camp, Occupation	Unknown
48SU598	P - Feature - Habitation - Hearths/FCR	Not Eligible
48SU599	P - Lithic Scatter	Not Eligible
48SU600	P - Artifacts and Features - Chipping/Knapping - Hearths/FCR	Eligible
48SU612	P - Lithic Scatter	Not Eligible
48SU613	P - Open Camp, Occupation	Unknown
48SU627	P - Hearths, FCR/Lithic Scatter	Unknown
48SU628	P - Hearths, FCR/Lithic Scatter	Unknown
48SU629	P - Hearths, FCR/Lithic Scatter	Unknown
48SU630	P -Hearths, FCR/Lithic Scatter	Unknown
48SU631	P - Hearths, FCR/Lithic Scatter	Unknown
48SU632	P - Hearths, FCR/Lithic Scatter	Unknown
48SU633	P - P - Open Camp, Occupation	Unknown
48SU634	P - Lithic Scatter	Unknown
48SU635	P - Hearths, FCR/Lithic Scatter	Unknown
48SU636	P - Lithic Scatter/GROUNDSTONE	Unknown
48SU641	P - Artifacts and Features - Chipping/Knapping - Hearths/FCR	Eligible
48SU649	P - Open Camp, Occupation	Unknown
48SU650	P - Hearths, FCR/Lithic Scatter	Unknown
48SU677	P - Open Camp, Occupation	Not Eligible
48SU696	P - Open Camp, Occupation	Unknown
48SU705	P - Open Camp, Occupation	Not Eligible
48SU723	P -Hearths, FCR/Lithic Scatter	Unknown
48SU724	P - Open Camp, Occupation	Unknown
48SU725	P - Lithic Scatter	Unknown
48SU732	P - Hearths, FCR/Lithic Scatter	Unknown
48SU733	P - Open Camp/Quarry	Unknown
48SU734	P - Lithic Scatter	Not Eligible
48SU735	P - Open Camp, Occupation	Unknown
48SU736	P - Quarry/Lithic Scatter	Unknown
48SU737	P - Lithic Scatter	Not Eligible
48SU738	P - Quarry/Lithic Scatter	Not Eligible
48SU739	P - Hearths/Lithic Scatter	Unknown
48SU798	H - Ranching-Homestead	Unknown
48SU812	P - Artifacts and Features-Butchering/Processing-Hearths/FCR	Eligible
48SU813	P - Artifacts and Features-Habitation-Hearths/FCR	Eligible

FCR = fire-cracked rock; H = historic; M/C = multicomponent, prehistoric and historic; P = prehistoric

SITE ID	TYPE	ELIGIBILITY STATUS
48SU818	P - Feature-Habitation-Hearths/FCR	Unknown
48SU819	P - Artifacts and Features-Habitation-Hearths/FCR	Unknown
48SU820	P - Artifacts and Features-Habitation-Hearths/FCR	Unknown
48SU821	P - Artifacts and Features - Chipping/Knapping - Hearths/FCR	Not Eligible
48SU822	P - Artifacts and Features-Habitation-Hearths/FCR	Unknown
48SU830	P - Lithic Scatter	Not Eligible
48SU831	P - Artifacts and Features - Habitation - Hearths/FCR	Not Eligible
48SU842	P - Artifacts and Features - Habitation - Stone Rings	Eligible
48SU858	P - Artifacts and Features - Chipping/Knapping - Alignments	Unknown
48SU880	P - Lithic Scatter	Unknown
48SU881	P - Lithic Scatter	Unknown
48SU893	H - Transportation - Bridge	Not Eligible
48SU894	H - Transportation - Bridge	Not Eligible
48SU900	H - Urban - Building	Eligible
48SU903	P - Lithic Scatter	Not Eligible
48SU904	P - Artifacts and Features-Habitation-Hearths/FCR	Eligible
48SU905	P - Lithic Scatter/Chipping/Knapping Station	Not Eligible
48SU906	P - Lithic Scatter/Chipping/Knapping Station	Not Eligible
48SU922	P - Artifacts and Features - Habitation - Hearths/FCR	Eligible
48SU930	H - Transportation-Bridge	Not eligible
48SU932	H - Transportation - Bridge	NRHP-listed
48SU937	P - Open Camp, Occupation	Eligible
48SU954	H - Ranching - Cattle Ranch	Eligible
48SU955	H - Ranching - Cattle Ranch	Eligible
48SU956	H - Ranching - Cattle Ranch	Eligible
48SU957	H - Building (Rural)	Not Eligible
48SU958	H - School	Eligible
48SU959	H - Ranching - Cattle Ranch	Eligible
48SU960	H - School	Eligible
48SU961	H - Ranching - Cattle Ranch	Eligible
48SU962	P - Open Camp, Occupation	Not Eligible
48SU963	P - Lithic Scatter	Not Eligible
48SU964	P - Artifacts and Features-Habitation-Hearths/FCR	Not Eligible
48SU969	P - Artifacts and Features - Habitation - Hearths/FCR	Eligible
48SU970	P - Lithic Scatter - Lithic Procurement - Secondary	Not Eligible
48SU971	P - Lithic Scatter - Lithic Procurement - Secondary	Not Eligible
48SU972	M/C - Artifacts and Features - Habitation - Hearths/FCR	Eligible
48SU976	H - Ranching - Cattle Ranch	NRHP-listed
48SU984	H - Ranching-Homestead	Eligible
48SU992	H - Ranching-Cattle Ranch	Eligible
48SU993	H - Ranching-Cattle Ranch	Eligible
48SU1006	P - Artifacts and Features - Butchering/Processing - Bone	NRHP-listed
48SU1007	P - Open Camp, Occupation	Not Eligible
48SU1008	P - Open Camp, Occupation	Not Eligible
48SU1009	P - Open Camp, Occupation	Not Eligible
48SU1010	P - Open Camp, Occupation	Eligible

FCR = fire-cracked rock; H = historic; M/C = multicomponent, prehistoric and historic; P = prehistoric

SITE ID	TYPE	ELIGIBILITY STATUS
48SU1033	H - Industry - Other	Not Eligible
48SU1039	H - Transportation - Bridge	Not Eligible
48SU1041	M/C - Artifacts and Features - Chipping/Knapping - Hearths/FCR	Eligible
48SU1042	P - Artifacts and Features - Chipping/Knapping - Hearths/FCR	Eligible
48SU1043	P - Artifacts and Features - Chipping/Knapping - Hearths/FCR	Eligible
48SU1044	P - Lithic Scatter	Not Eligible
48SU1045	P - Lithic Scatter	Not Eligible
48SU1047	H - School	Eligible
48SU1048	H - School	Eligible
48SU1058	H - School	Eligible
48SU1061	H - School	Not Eligible
48SU1084	P - Lithic Scatter/Habitation	Unknown
48SU1089	M/C - Ranching - Homestead	Eligible
48SU1091	P - Lithic Scatter	Not Eligible
48SU1092	P - Lithic Scatter/Habitation	Unknown
48SU1093	P - Artifacts and Features - Habitation - Alignments	Eligible
48SU1094	P - Lithic Scatter/Chipping/Knapping Station	Not Eligible
48SU1095	H - Irrigation - Dam	Not Eligible
48SU1096	H - Irrigation - Dam	Eligible
48SU1097	P - Open Camp, Occupation	Unknown
48SU1098	P - Lithic Scatter/Habitation	Unknown
48SU1100	H - Cabin	Not Eligible
48SU1105	M/C - Lithic Scatter	Eligible
48SU1111	P - Open Camp, Occupation	Eligible
48SU1112	P - Lithic Scatter/Chipping/Knapping Station	Not Eligible
48SU1113	M/C - Artifacts and Features - Habitation - Hearths/FCR	Eligible
48SU1114	P - Open Camp, Occupation	Eligible
48SU1115	P - Lithic Scatter	Unknown
48SU1118	M/C - Debris	Eligible
48SU1119	P - Lithic Scatter	Not Eligible
48SU1120	P -Open Camp, Occupation	Eligible
48SU1121	P - Lithic Scatter	Not Eligible
48SU1122	P -Open Camp, Occupation	Eligible
48SU1158	P - Lithic Scatter - Lithic Procurement - Quarry PITS	Eligible
48SU1159	P - Lithic Scatter/Habitation	Eligible
48SU1160	P - Lithic Scatter/Habitation	Not Eligible
48SU1161	P - Lithic Scatter	Not Eligible
48SU1162	P - Lithic Scatter	Eligible
48SU1163	P - Lithic Scatter	Eligible
48SU1164	P - Lithic Scatter	Eligible
48SU1165	P - Lithic Scatter	Not Eligible
48SU1166	P - Lithic Scatter	Unknown
48SU1167	P - Lithic Scatter/Chipping/Knapping Station	Unknown
48SU1168	P - Lithic Scatter - Lithic Procurement - Quarry Pits	Eligible
48SU1169	P - Lithic Scatter/Habitation	Eligible
48SU1265	H - Cabin	Unknown

FCR = fire-cracked rock; H = historic; M/C = multicomponent, prehistoric and historic; P = prehistoric

SITE ID	TYPE	ELIGIBILITY STATUS
48SU1267	H - Debris	Not Eligible
48SU1268	H - Debris	Not Eligible
48SU1269	H - Debris	Not Eligible
48SU1270	P - Lithic Scatter/Chipping/Knapping Station	Not Eligible
48SU1280	P - Artifacts and Features - Habitation - Hearths/FCR	Not Eligible
48SU1281	H - Road	Not Eligible
48SU1282	M/C - Historic Cemetery/Grave	Eligible
48SU1286	H - Tourism - Building	NRHP-listed
48SU1295	P - Lithic Scatter/Chipping/Knapping Station	Unknown
48SU1314	P - Artifacts and Features - Hunting Blind	Eligible
48SU1406	M/C - Debris	Not Eligible
48SU1407	M/C - Debris	Eligible
48SU1408_1	H - Road	Eligible
48SU1447	P - Lithic Scatter	Not Eligible
48SU1448	P - Lithic Scatter/Habitation	Eligible
48SU1449	P - Lithic Scatter - Lithic Procurement - Secondary	Not Eligible
48SU1451	H - Canal	Eligible
48SU1464	P - Artifacts and Features - Habitation - Hearths/FCR	Not Eligible
48SU1465	P - Artifacts and Features - Habitation - Hearths/FCR	Unknown
48SU1466	P - Artifacts and Features - Hearths/FCR	Not Eligible
48SU1467	H - Conservation - Cabin	Not Eligible
48SU1472	P - Lithic Scatter/Chipping/Knapping Station	Not Eligible
48SU1537	H - Canal	Not Eligible
48SU1557	H - Irrigation-Canal	Not Eligible
48SU1614	P - Lithic Scatter	Not Eligible
48SU1615	P - Artifacts and Features - Chipping/Knapping - Hearths/FCR	Not Eligible
48SU1616	P - Lithic Scatter	Not Eligible
48SU1617	P - Open Camp, Occupation	Not Eligible
48SU1618	P - Artifacts and Features - Chipping/Knapping - Hearths/FCR	Not Eligible
48SU1619	P - Artifacts and Features - Chipping/Knapping - Hearths/FCR	Not Eligible
48SU1620	P - Lithic Scatter	Not Eligible
48SU1621	P - Lithic Scatter	Not Eligible
48SU1622	P - Artifacts and Features - Chipping/Knapping - Hearths/FCR	Not Eligible
48SU1623	P - Artifacts and Features - Chipping/Knapping - Hearths/FCR	Not Eligible
48SU1631	P - Artifacts and Features - Chipping/Knapping - Hearths/FCR	Eligible
48SU1743	P - Lithic Scatter	Not Eligible
48SU1744	H - Cabin	Not Eligible
48SU1745	P - Lithic Scatter - Milling/Vegetable Processing	Not Eligible
48SU1746	M/C - Cairn	Eligible
48SU1747	H - Recreation - Foundation	Eligible
48SU1757	P - Sheep Trap/Kill	Eligible
48SU1777	H - Cabin	Eligible
48SU1787	P - Lithic Scatter/Chipping/Knapping Station	Not Eligible
48SU1788	P - Lithic Scatter/Chipping/Knapping Station	Not Eligible
48SU1791	P - Artifacts and Features - Habitation - Hearths/FCR	Not Eligible
48SU1810	P - Artifacts and Features - Habitation - Hearths/FCR	Eligible

FCR = fire-cracked rock; H = historic; M/C = multicomponent, prehistoric and historic; P = prehistoric

SITE ID	TYPE	ELIGIBILITY STATUS
48SU1811	P - Artifacts and Features - Habitation - Rockshelter	Eligible
48SU1918	P - Lithic Scatter/Chipping/Knapping Station	Not Eligible
48SU1919	P - Lithic Scatter/Chipping/Knapping Station	Not Eligible
48SU2019	P - Artifacts and Features - Milling/Vegetable Processing - Hearths/FCR	Unknown
48SU2071	P - Lithic Scatter - Activity Areas - Habitation	Eligible
48SU2072	P - Lithic Scatter	Not Eligible
48SU2073	P - Lithic Scatter	Not Eligible
48SU2074	P - Lithic Scatter	Not Eligible
48SU2075	P - Lithic Scatter - Activity Areas - Habitation	Eligible
48SU2076	P - Lithic Scatter - Activity Areas - Habitation	Not Eligible
48SU2077	P - Lithic Scatter - Activity Areas - Habitation	Not Eligible
48SU2078	P - Lithic Scatter - Activity Areas - Habitation	Not Eligible
48SU2079	P - Lithic Scatter - Activity Areas - Habitation	Not Eligible
48SU2080	P - Lithic Scatter - Activity Areas - Habitation	Eligible
48SU2081	P - Lithic Scatter - Activity Areas - Habitation	Not Eligible
48SU2082	P - Lithic Scatter - Activity Areas - Habitation	Not Eligible
48SU2083	P - Lithic Scatter/Chipping/Knapping Station	Eligible
48SU2084	P - Lithic Scatter - Activity Areas - Habitation	Eligible
48SU2085	P - Lithic Scatter - Activity Areas - Habitation	Not Eligible
48SU2086	P - Lithic Scatter - Activity Areas - Habitation	Eligible
48SU2087	P - Lithic Scatter - Activity Areas - Habitation	Eligible
48SU2088	P - Lithic Scatter - Activity Areas - Habitation	Eligible
48SU2089	P - Lithic Scatter - Activity Areas - Habitation	Not Eligible
48SU2090	P - Lithic Scatter - Activity Areas - Habitation	Not Eligible
48SU2091	H - Dam	Eligible
48SU2092	H - Cabin	Eligible
48SU2260	P - Open Camp, Occupation	Not Eligible
48SU2261	P - Artifacts and Features - Chipping/Knapping - Ceramics	Eligible
48SU2276	P - Open Camp, Occupation	Unknown
48SU2320	P - Artifacts and Features - Chipping/Knapping - Hearths/FCR	Not Eligible
48SU2337	P - Open Camp, Occupation	Not Eligible
48SU2338	P - Artifacts and Features - Chipping/Knapping - Hearths/FCR	Eligible
48SU2339	P - Artifacts and Features - Habitation - Hearths/FCR	Eligible
48SU2377	P - Open Camp, Occupation	Unknown
48SU2397	P - Open Camp, Occupation	Unknown
48SU2398	P - Open Camp, Occupation	Unknown
48SU2399	P - Artifacts and Features - Habitation - Hearths/FCR	Unknown
48SU2400	P -Lithic Scatter	Not Eligible
48SU2401	P -Open Camp, Occupation	Unknown
48SU2402	P - Open Camp, Occupation	Unknown
48SU2403	P - Open Camp, Occupation	Unknown
48SU2404	P - Open Camp, Occupation	Unknown
48SU2405	P - Lithic Scatter	Unknown
48SU2415	P - Open Camp, Occupation	Unknown
48SU2416	P - Lithic Scatter	Unknown
48SU2417	P - Open Camp, Occupation	Eligible

FCR = fire-cracked rock; H = historic; M/C = multicomponent, prehistoric and historic; P = prehistoric

SITE ID	TYPE	ELIGIBILITY STATUS
48SU2418	P - Open Camp, Occupation	Unknown
48SU2419	P - Lithic Scatter	Not Eligible
48SU2421	P - Open Camp, Occupation	Unknown
48SU2422	P - Open Camp, Occupation	Unknown
48SU2470	P - Lithic Scatter - FCR - Habitation	Unknown
48SU2582	P - Lithic Scatter/Chipping/Knapping Station	Unknown
48SU2587	P - Lithic Scatter	Not Eligible
48SU2633	P - Artifacts and Features - Habitation - Hearths/FCR	Eligible
48SU2634	M/C - Debris	Not Eligible
48SU2635	P - Lithic Scatter - FCR - Habitation	Not Eligible
48SU2637	P - Open Camp, Occupation	Not Eligible
48SU2663	P - Artifacts and Features - Habitation - Hearths/FCR	Not Eligible
48SU2704	P - Lithic Scatter/Chipping/Knapping Station	Not Eligible
48SU2705	P - Lithic Scatter/Chipping/Knapping Station	Not Eligible
48SU2730	P -Artifacts and Features - Chipping/Knapping - Hearths/FCR	Not Eligible
48SU2733	P - Artifacts and Features - Chipping/Knapping - Hearths/FCR	Not Eligible
48SU2734	P - Artifacts and Features - Chipping/Knapping - Hearths/FCR	Eligible
48SU2738	P - Artifacts and Features - Chipping/Knapping - Hearths/FCR	Eligible
48SU2762	P - Feature - Habitation - Hearths/FCR	Not Eligible
48SU2763	P - Feature - Habitation - Hearths/FCR	Not Eligible
48SU2768	P - Composite Scatter - Chipping/Knapping	Not Eligible
48SU2778	P - Artifacts and Features - Chipping/Knapping - Hearths/FCR	Eligible
48SU2793	P - Feature - Habitation - Hearths/FCR	Not Eligible
48SU2807	H - Ranching - Inscription	Not Eligible
48SU2822	P - Artifacts and Features - Habitation - Hearths/FCR	Eligible
48SU2839	P - Lithic Scatter/Chipping/Knapping Station	Eligible
48SU2840	P - Artifacts and Features - Chipping/Knapping - Cache Pits	Eligible
48SU2841	P - Lithic Scatter/Chipping/Knapping Station	Eligible
48SU2842	P - Lithic Scatter/Chipping/Knapping Station	Unknown
48SU2873	P - Artifacts and Features - Habitation - Hearths/FCR	Not Eligible
48SU2874	P - Lithic Scatter - FCR - Habitation	Not Eligible
48SU2908	H - Irrigation - Building	Not Eligible
48SU2922	P - Feature - Habitation - Hearths/FCR	Not Eligible
48SU2927	P - Artifacts and Features - Chipping/Knapping - Hearths/FCR	Not Eligible
48SU2928	P - Lithic Scatter - Lithic Procurement - Secondary	Not Eligible
48SU2964	P - Artifacts and Features - Habitation - Hearths/FCR	Eligible
48SU2970	P - Feature - Habitation - Hearths/FCR	Unknown
48SU2971	P - Artifacts and Features - Chipping/Knapping - Hearths/FCR	Not Eligible
48SU2972	P - Feature - Habitation - HOUSE PITS	Unknown
48SU2981	P - Artifacts and Features - Habitation - Hearths/FCR	Not Eligible
48SU2982	P - Feature - Habitation - Hearths/FCR	Not Eligible

FCR = fire-cracked rock; H = historic; M/C = multicomponent, prehistoric and historic; P = prehistoric

SITE ID	TYPE	ELIGIBILITY STATUS
48SU2983	P - Lithic Scatter - FCR - Habitation	Not Eligible
48SU2985	P - Artifacts and Features - Chipping/Knapping - Hearths/FCR	Not Eligible
48SU3000	P - Hearth, Firepit, FCR	Not Eligible
48SU3008	P - Lithic Scatter/Chipping/Knapping Station	Not Eligible
48SU3009	H - Ranching - Trash Dump	Not Eligible
48SU3064	P - Artifacts and Features - Chipping/Knapping - Hearths/FCR	Not Eligible
48SU3065	P - Artifacts and Features - Habitation - Hearths/FCR	Eligible
48SU3076	P - Lithic Scatter/Chipping/Knapping Station	Not Eligible
48SU3077	P - Lithic Scatter/Chipping/Knapping Station	Not Eligible
48SU3078	P - Lithic Scatter/Chipping/Knapping Station	Not Eligible
48SU3079	P - Lithic Scatter - FCR - Chipping/Knapping Station	Eligible
48SU3080	P - Open Camp, Occupation	Not Eligible
48SU3100	P - Artifacts and Features - Chipping/Knapping - Hearths/FCR	Unknown
48SU3101	P - Artifacts and Features - Other - Hearths/FCR	Eligible
48SU3102	H - Cairn	Not Eligible
48SU3103	*No Information*	Unknown
48SU3108	P - Artifacts and Features - Chipping/Knapping - Hearths/FCR	Not Eligible
48SU3109	P - Artifacts and Features - Habitation - Hearths/FCR	Not Eligible
48SU3110	P - Artifacts and Features - Habitation - Hearths/FCR	Unknown
48SU3111	P - Feature - Other - Cairns	Unknown
48SU3112	P - Feature - Habitation - Hearths/FCR	Unknown
48SU3113	P - Artifacts and Features - Habitation - Cairns	Not Eligible
48SU3114	P - Artifacts and Features - Habitation - Hearths/FCR	Unknown
48SU3115	P - Artifacts and Features - Chipping/Knapping - Hearths/FCR	Eligible
48SU3118	P - Artifacts and Features - Habitation - Hearths/FCR	Unknown
48SU3119	P - Feature - Habitation - Stone Rings	Unknown
48SU3120	P - Artifacts and Features - Milling/Vegetable Processing - Hearths/FCR	Unknown
48SU3121	P - Artifacts and Features - Habitation - Hearths/FCR	Unknown
48SU3124	P - Artifacts and Features - Habitation - Hearths/FCR	Unknown
48SU3125	*No Information*	Unknown
48SU3126	P - Artifacts and Features - Habitation - Hearths/FCR	Unknown
48SU3127	P - Artifacts and Features - Chipping/Knapping - Hearths/FCR	Not Eligible
48SU3132	*No Information*	Unknown
48SU3133	*No Information*	Unknown
48SU3134	P - Feature - Other - Cairns	Unknown
48SU3135	P - Artifacts and Features - Habitation - Hearths/FCR	Unknown
48SU3136	P - Artifacts and Features - Milling/Vegetable Processing - Hearths/FCR	Unknown
48SU3137	P - Artifacts and Features - Habitation - Hearths/FCR	Unknown
48SU3138	P - Artifacts and Features - Habitation - Hearths/FCR	Not Eligible
48SU3142	P - Artifacts and Features - Milling/Vegetable Processing - Hearths/FCR	Unknown
48SU3143	P - Artifacts and Features - Chipping/Knapping - Hearths/FCR	Not Eligible
48SU3144	P - Artifacts and Features - Chipping/Knapping - Hearths/FCR	Unknown
48SU3145	P - Artifacts and Features - Habitation - Hearths/FCR	Unknown
48SU3146	P - Artifacts and Features - Habitation - Hearths/FCR	Not Eligible
48SU3147	P - Artifacts and Features - Chipping/Knapping - Hearths/FCR	Eligible
48SU3148	P - Artifacts and Features - Chipping/Knapping - Hearths/FCR	Not Eligible

FCR = fire-cracked rock; H = historic; M/C = multicomponent, prehistoric and historic; P = prehistoric

SITE ID	TYPE	ELIGIBILITY STATUS
48SU3149	P - Artifacts and Features - Chipping/Knapping - Hearths/FCR	Not Eligible
48SU3150	M/C - Debris	Unknown
48SU3151	M/C - Artifacts and Features - Chipping/Knapping - Hearths/FCR	Unknown
48SU3156	P - Artifacts and Features - Chipping/Knapping - Hearths/FCR	Not Eligible
48SU3167	P - Artifacts and Features - Chipping/Knapping - Hearths/FCR	Unknown
48SU3173	P - Cairn, Cache, Rock Piles	Not Eligible
48SU3174	P - Artifacts and Features - Chipping/Knapping - Hearths/FCR	Eligible
48SU3175	P - Cairn, Cache, Rock Piles	Not Eligible
48SU3176	P - Artifacts and Features - Chipping/Knapping - Hearths/FCR	Unknown
48SU3177	P - Artifacts and Features - Chipping/Knapping - Hearths/FCR	Not Eligible
48SU3178	P - Artifacts and Features - Chipping/Knapping - Hearths/FCR	Unknown
48SU3179	P - Artifacts and Features - Chipping/Knapping - Hearths/FCR	Unknown
48SU3180	P - Artifacts and Features - Chipping/Knapping - Hearths/FCR	Unknown
48SU3182	P - Artifacts and Features - Chipping/Knapping - Hearths/FCR	Not Eligible
48SU3186	P - Artifacts and Features - Chipping/Knapping - Hearths/FCR	Unknown
48SU3187	P - Artifacts and Features - Chipping/Knapping - Hearths/FCR	Unknown
48SU3188	P - Artifacts and Features - Chipping/Knapping - Hearths/FCR	Not Eligible
48SU3192	P - Artifacts and Features - Milling/Vegetable Processing - Hearths/FCR	Unknown
48SU3193	P - Artifacts and Features - Milling/Vegetable Processing - Hearths/FCR	Unknown
48SU3194	P - Artifacts and Features - Chipping/Knapping - Hearths/FCR	Unknown
48SU3201	P - Lithic Scatter/Chipping/Knapping Station	Unknown
48SU3202	P - Artifacts and Features - Chipping/Knapping - Hearths/FCR	Not Eligible
48SU3203	P - Artifacts and Features - Chipping/Knapping - Hearths/FCR	Not Eligible
48SU3204	P - Artifacts and Features - Habitation - Hearths/FCR	Unknown
48SU3205	P - Open Camp, Occupation	Not Eligible
48SU3206	P - Lithic Scatter - FCR - Chipping/Knapping Station	Unknown
48SU3207	P - Artifacts and Features - Habitation - Bone	Unknown
48SU3208	P - Lithic Scatter - FCR - Chipping/Knapping Station	Unknown
48SU3209	P - Lithic Scatter - FCR - Chipping/Knapping Station	Unknown
48SU3210	P - Lithic Scatter - FCR - Chipping/Knapping Station	Unknown
48SU3211	P - Artifacts and Features - Chipping/Knapping - Hearths/FCR	Not Eligible
48SU3212	P - Artifacts and Features - Lithic Procurement - Primary - Hearths/FCR	Unknown
48SU3213	P - Artifacts and Features - Chipping/Knapping - Hearths/FCR	Unknown
48SU3214	P - Artifacts and Features - Chipping/Knapping - Hearths/FCR	Unknown
48SU3215	P - Artifacts and Features - Chipping/Knapping - Hearths/FCR	Not Eligible
48SU3216	P - Lithic Scatter - FCR - Chipping/Knapping Station	Unknown
48SU3217	P - Lithic Scatter - FCR - Chipping/Knapping Station	Unknown
48SU3218	P - Artifacts and Features - Lithic Procurement - Secondary - Hearths/FCR	Unknown
48SU3219	P - Artifacts and Features - Habitation - Hearths/FCR	Unknown
48SU3220	P - Artifacts and Features - Chipping/Knapping - Hearths/FCR	Unknown
48SU3221	P - Artifacts and Features - Chipping/Knapping - Hearths/FCR	Eligible
48SU3222	M/C - Open Camp, Occupation	Eligible
48SU3223	P - Artifacts and Features - Chipping/Knapping - Hearths/FCR	Unknown
48SU3224	P - Lithic Scatter - Milling/Vegetable Processing	Unknown
48SU3225	P - Lithic Scatter - FCR - Chipping/Knapping Station	Unknown
48SU3226	P - Lithic Scatter - FCR - Chipping/Knapping Station	Unknown

FCR = fire-cracked rock; H = historic; M/C = multicomponent, prehistoric and historic; P = prehistoric

SITE ID	TYPE	ELIGIBILITY STATUS
48SU3227	P - Lithic Scatter/Chipping/Knapping Station	Unknown
48SU3228	P - Lithic Scatter - Milling/Vegetable Processing	Unknown
48SU3229	P - Lithic Scatter/Chipping/Knapping Station	Unknown
48SU3230	P - Lithic Scatter	Not Eligible
48SU3231	P - Lithic Scatter	Not Eligible
48SU3232	P - Lithic Scatter - FCR - Chipping/Knapping Station	Unknown
48SU3233	P - Artifacts and Features - Milling/Vegetable Processing - Hearths/FCR	Unknown
48SU3234	P - Lithic Scatter/Chipping/Knapping Station	Unknown
48SU3235	P - Lithic Scatter/Chipping/Knapping Station	Unknown
48SU3236	P - Artifacts and Features - Chipping/Knapping - Hearths/FCR	Unknown
48SU3237	H - Cairn	Unknown
48SU3238	P - Lithic Scatter - FCR - Chipping/Knapping Station	Unknown
48SU3239	P - Lithic Scatter - FCR - Chipping/Knapping Station	Unknown
48SU3240	P - Artifacts and Features - Chipping/Knapping - Hearths/FCR	Eligible
48SU3241	P - Artifacts and Features - Chipping/Knapping - Hearths/FCR	Unknown
48SU3242	H - Cairn	Unknown
48SU3243	P - Artifacts and Features - Chipping/Knapping - Hearths/FCR	Not Eligible
48SU3244	P - Lithic Scatter/Chipping/Knapping Station	Unknown
48SU3245	P - Lithic Scatter/Chipping/Knapping Station	Not Eligible
48SU3246	P - Lithic Scatter - Lithic Procurement - Secondary	Unknown
48SU3247	M/C - Debris	Eligible
48SU3248	P - Lithic Scatter - FCR - Chipping/Knapping Station	Unknown
48SU3249	P - Artifacts and Features - Lithic Procurement - PRIMARY - Hearths/FCR	Unknown
48SU3250	P - Artifacts and Features - Chipping/Knapping - Hearths/FCR	Unknown
48SU3251	P - Lithic Scatter - FCR - Chipping/Knapping Station	Unknown
48SU3252	P - Lithic Scatter - CHIPPING/ KNAPPING -Bone	Unknown
48SU3253	P - Lithic Scatter/Chipping/Knapping Station	Unknown
48SU3254	P - Lithic Scatter	Not Eligible
48SU3255	P - Artifacts and Features - Chipping/Knapping - Hearths/FCR	Unknown
48SU3256	P - Lithic Scatter/Chipping/Knapping Station	Unknown
48SU3257	P - Lithic Scatter - FCR - Chipping/Knapping Station	Unknown
48SU3258	P - Lithic Scatter - FCR - Chipping/Knapping Station	Unknown
48SU3259	P - Lithic Scatter	Not Eligible
48SU3260	P - Lithic Scatter - FCR - Chipping/Knapping Station	Unknown
48SU3261	P - Artifacts and Features - Chipping/Knapping - Hearths/FCR	Not Eligible
48SU3262	P - Lithic Scatter - FCR - Chipping/Knapping Station	Unknown
48SU3263	P - Lithic Scatter	Unknown
48SU3264	P - Open Camp, Occupation	Unknown
48SU3265	P - Artifacts and Features - Chipping/Knapping - Hearths/FCR	Unknown
48SU3266	P - Feature - Habitation - Hearths/FCR	Unknown
48SU3267	P - Lithic Scatter - FCR - Chipping/Knapping Station	Unknown
48SU3268	P - Lithic Scatter - FCR - Chipping/Knapping Station	Unknown
48SU3271	P - Open Camp/Lithic Scatter	Not Eligible
48SU3317	P - Artifacts and Features - Chipping/Knapping - Hearths/FCR	Not Eligible
48SU3318	P - Lithic Scatter - Milling/Vegetable Processing	Unknown
48SU3319	P - Lithic Scatter - Milling/Vegetable Processing	Not Eligible

FCR = fire-cracked rock; H = historic; M/C = multicomponent, prehistoric and historic; P = prehistoric

SITE ID	TYPE	ELIGIBILITY STATUS
48SU3320	P - Lithic Scatter/Chipping/Knapping Station	Unknown
48SU3321	P - Feature - Habitation - Hearths/FCR	Not Eligible
48SU3322	P - Stone Circle	Unknown
48SU3323	P - Lithic Scatter - FCR - Chipping/Knapping Station	Unknown
48SU3324	P - Lithic Scatter - FCR - Chipping/Knapping Station	Unknown
48SU3325	M/C - Debris	Unknown
48SU3326	P - Lithic Scatter/Chipping/Knapping Station	Unknown
48SU3327	M/C - Debris	Unknown
48SU3328	P - Lithic Scatter - Milling/Vegetable Processing	Unknown
48SU3329	P - Artifacts and Features - Chipping/Knapping - Hearths/FCR	Unknown
48SU3330	P - Artifacts and Features - Milling/Vegetable Processing - Hearths/FCR	Eligible
48SU3331	P - Lithic Scatter/Chipping/Knapping Station	Not Eligible
48SU3332	P - Lithic Scatter	Not Eligible
48SU3333	H - Debris	Unknown
48SU3334	P - Lithic Scatter - Milling/Vegetable Processing	Unknown
48SU3335	P - Artifacts and Features - Chipping/Knapping - Hearths/FCR	Not Eligible
48SU3336	P - Open Camp, Occupation	Eligible
48SU3337	P - Lithic Scatter	Not Eligible
48SU3338	P - Lithic Scatter/Chipping/Knapping Station	Unknown
48SU3339	P - Lithic Scatter/Chipping/Knapping Station	Unknown
48SU3340	P - Lithic Scatter - FCR - Chipping/Knapping Station	Unknown
48SU3341	P - Open Camp, Occupation	Eligible
48SU3342	P - Artifacts and Features - Chipping/Knapping - Hearths/FCR	Eligible
48SU3343	P - Artifacts and Features - Chipping/Knapping - Hearths/FCR	Unknown
48SU3344	H - Debris	Not Eligible
48SU3345	P - Artifacts and Features - Chipping/Knapping - Hearths/FCR	Not Eligible
48SU3346	P - Feature - Habitation - Hearths/FCR	Eligible
48SU3347	P - Artifacts and Features - Chipping/Knapping - Hearths/FCR	Unknown
48SU3348	P - Artifacts and Features - Habitation - Hearths/FCR	Eligible
48SU3349	P - Artifacts and Features - Hearths/FCR	Eligible
48SU3350	H - Debris	Not Eligible
48SU3351	M/C - Debris	Not Eligible
48SU3352	P - Artifacts and Features - Habitation - Alignments	Eligible
48SU3390	P - Artifacts and Features - Chipping/Knapping - Hearths/FCR	Unknown
48SU3391	P - Lithic Scatter/Chipping/Knapping Station	Unknown
48SU3393	P - Artifacts and Features - Habitation - Stone Rings	Eligible
48SU3394	P - Lithic Scatter/Chipping/Knapping Station	Unknown
48SU3395	P - Lithic Scatter - FCR - Chipping/Knapping Station	Unknown
48SU3396	M/C - Artifacts and Features - Habitation - Bone	Eligible
48SU3397	P - Artifacts and Features - Chipping/Knapping - Hearths/FCR	Not Eligible
48SU3398	P - Lithic Scatter - Milling/Vegetable Processing	Unknown
48SU3399	P - Lithic Scatter - FCR - Chipping/Knapping Station	Unknown
48SU3400	P - Lithic Scatter - FCR - Chipping/Knapping Station	Unknown
48SU3401	P - Lithic Scatter - Milling/Vegetable Processing	Eligible
48SU3402	P - Lithic Scatter - Milling/Vegetable Processing	Eligible
48SU3403	P - Lithic Scatter - Milling/Vegetable Processing	Unknown

FCR = fire-cracked rock; H = historic; M/C = multicomponent, prehistoric and historic; P = prehistoric

SITE ID	TYPE	ELIGIBILITY STATUS
48SU3404	P - Lithic Scatter - FCR - Chipping/Knapping Station	Unknown
48SU3405	P - Lithic Scatter/Chipping/Knapping Station	Unknown
48SU3406	P - Lithic Scatter/Chipping/Knapping Station	Unknown
48SU3407	P - Lithic Scatter - FCR - Chipping/Knapping Station	Unknown
48SU3408	P - Lithic Scatter - FCR - Chipping/Knapping Station	Unknown
48SU3409	P - Lithic Scatter - FCR - Chipping/Knapping Station	Unknown
48SU3410	P - Artifacts and Features - Habitation - Hearths/FCR	Eligible
48SU3411	P - Lithic Scatter/Chipping/Knapping Station	Unknown
48SU3412	P - Artifacts and Features - Chipping/Knapping - Hearths/FCR	Eligible
48SU3413	P - Artifacts and Features - Milling/Vegetable Processing - Hearths/FCR	Eligible
48SU3414	P - Artifacts and Features - Chipping/Knapping - Hearths/FCR	Eligible
48SU3415	P - Open Camp, Occupation	Eligible
48SU3416	P - Artifacts and Features - Chipping/Knapping - Hearths/FCR	Not Eligible
48SU3417	P - Open Camp, Occupation	Eligible
48SU3418	P - Lithic Scatter - FCR - Chipping/Knapping Station	Unknown
48SU3462	P - Artifacts and Features - Chipping/Knapping - Hearths/FCR	Not Eligible
48SU3464	P - Artifacts and Features - Chipping/Knapping - Hearths/FCR	Unknown
48SU3465	P - Lithic Scatter/Chipping/Knapping Station	Unknown
48SU3466	M/C - Artifacts and Features - Habitation	Eligible
48SU3467	P - Open Camp, Occupation	Not Eligible
48SU3468	P - Artifacts and Features - Chipping/Knapping - Hearths/FCR	Eligible
48SU3469	P - Artifacts and Features - Chipping/Knapping - Hearths/FCR	Not Eligible
48SU3470	P - Artifacts and Features - Chipping/Knapping - Hearths/FCR	Not Eligible
48SU3471	P - Lithic Scatter - FCR - Chipping/Knapping Station	Unknown
48SU3472	P - Lithic Scatter	Unknown
48SU3473	P - Lithic Scatter	Unknown
48SU3474	P - Artifacts and Features - Chipping/Knapping - Hearths/FCR	Unknown
48SU3475	M/C - Artifacts and Features - Chipping/Knapping - Hearths/FCR	Unknown
48SU3476	P - Artifacts and Features - Chipping/Knapping - Hearths/FCR	Unknown
48SU3477	P - Lithic Scatter - Lithic Procurement-PRIMARY	Unknown
48SU3478	P - Lithic Scatter/Chipping/Knapping Station	Not Eligible
48SU3479	P - Artifacts and Features - Chipping/Knapping - Hearths/FCR	Unknown
48SU3480	P - Artifacts and Features - Chipping/Knapping - Hearths/FCR	Unknown
48SU3482	M/C - Debris	Unknown
48SU3483	P - Artifacts and Features - Chipping/Knapping - Hearths/FCR	Unknown
48SU3486	P - Artifacts and Features - Chipping/Knapping - Hearths/FCR	Unknown
48SU3487	P - Artifacts and Features - Chipping/Knapping - Hearths/FCR	Unknown
48SU3488	P - Open Camp, Occupation	Unknown
48SU3489	P - Open Camp, Occupation	Unknown
48SU3490	M/C - Debris	Eligible
48SU3491	M/C - Debris	Unknown
48SU3492	P - Artifacts and Features - Chipping/Knapping - Ceramics	Unknown
48SU3493	P - Lithic Scatter - FCR - Chipping/Knapping Station	Unknown
48SU3495	P - Artifacts and Features - Chipping/Knapping - Hearths/FCR	Unknown
48SU3496	P - Lithic Scatter/Chipping/Knapping Station	Unknown
48SU3497	P - Lithic Scatter	Unknown

FCR = fire-cracked rock; H = historic; M/C = multicomponent, prehistoric and historic; P = prehistoric

SITE ID	TYPE	ELIGIBILITY STATUS
48SU3498	P - Lithic Scatter	Unknown
48SU3499	M/C - Debris	Unknown
48SU3500	P - Lithic Scatter/Chipping/Knapping Station	Not Eligible
48SU3501	M/C - Artifacts and Features - Chipping/Knapping - Hearths/FCR	Eligible
48SU3502	P - Lithic Scatter - FCR - Chipping/Knapping Station	Unknown
48SU3503	P - Lithic Scatter/Chipping/Knapping Station	Unknown
48SU3504	P - Lithic Scatter/Chipping/Knapping Station	Unknown
48SU3505	P - Lithic Scatter - FCR - Chipping/Knapping Station	Unknown
48SU3506	P - Artifacts and Features - Chipping/Knapping - Hearths/FCR	Unknown
48SU3507	P - Artifacts and Features - Chipping/Knapping - Hearths/FCR	Unknown
48SU3508	H - Road	Not Eligible
48SU3547	P - Artifacts and Features - Habitation - Hearths/FCR	Not Eligible
48SU3658	P - Artifacts and Features - Habitation - Hearths/FCR	Not Eligible
48SU3659	P - Artifacts and Features - Habitation - Hearths/FCR	Not Eligible
48SU3660	P - Artifacts and Features - Habitation - Hearths/FCR	Not Eligible
48SU3661	P - Artifacts and Features - Habitation - Hearths/FCR	Not Eligible
48SU3662	P - Open Camp, Occupation	Not Eligible
48SU3663	P - Artifacts and Features - Habitation - Hearths/FCR	Not Eligible
48SU3666	P - Open Camp, Occupation	Not Eligible
48SU3710	P - Artifacts and Features - Habitation - Hearths/FCR	Not Eligible
48SU3711	P - Feature - Habitation - Hearths/FCR	Not Eligible
48SU3751	P - Lithic Scatter	Not Eligible
48SU3752	M/C - Debris	Eligible
48SU3784	P - Artifacts and Features - Chipping/Knapping - Hearths/FCR	Unknown
48SU3802	P - Open Camp, Occupation	Unknown
48SU3813	P - Artifacts and Features - Habitation - Hearths/FCR	Not Eligible
48SU3819	P - Open Camp, Occupation	Not Eligible
48SU3820	P - Artifacts and Features - Habitation - Hearths/FCR	Not Eligible
48SU3821	P - Lithic Scatter/P - Open Camp	Not Eligible
48SU3825	P - Artifacts and Features - Habitation - Hearths/FCR	Not Eligible
48SU3826	P - Artifacts and Features - Habitation - Hearths/FCR	Not Eligible
48SU3827	P - Artifacts and Features - Habitation - Hearths/FCR	Not Eligible
48SU3828	P - Artifacts and Features - Habitation - Hearths/FCR	Eligible
48SU3829	P - Artifacts and Features - Chipping/Knapping - Hearths/FCR	Not Eligible
48SU3830	P - Artifacts and Features - Habitation - Hearths/FCR	Not Eligible
48SU3831	P - Artifacts and Features - Habitation - Hearths/FCR	Not Eligible
48SU3832	P - Artifacts and Features - Habitation - Hearths/FCR	Not Eligible
48SU3833	P - Artifacts and Features - Chipping/Knapping - Hearths/FCR	Not Eligible
48SU3834	P - Artifacts and Features - Habitation - Hearths/FCR	Not Eligible
48SU3849	P - Open Camp, Occupation	Not Eligible
48SU3851	P - Feature - Habitation - Hearths/FCR	Not Eligible
48SU3852	M/C - Artifacts and Features - Chipping/Knapping - Hearths/FCR	Not Eligible
48SU3853	P - Artifacts and Features - Chipping/Knapping - Hearths/FCR	Not Eligible
48SU3904	P - Feature - Habitation - Hearths/FCR	Not Eligible
48SU3927	P - Lithic Scatter	Not Eligible
48SU3929	P - Artifacts and Features - Chipping/Knapping - Hearths/FCR	Not Eligible

FCR = fire-cracked rock; H = historic; M/C = multicomponent, prehistoric and historic; P = prehistoric

SITE ID	TYPE	ELIGIBILITY STATUS
48SU3930	P - Artifacts and Features - Habitation - Hearths/FCR	Not Eligible
48SU3943	P - Artifacts and Features - Chipping/Knapping - Hearths/FCR	Not Eligible
48SU3944	P - Artifacts and Features - Chipping/Knapping - Hearths/FCR	Not Eligible
48SU3949	*No Information*	Unknown
48SU3950	*No Information*	Unknown
48SU3951	*No Information*	Unknown
48SU2952	*No Information*	Unknown
48SU3953	P - Open Camp/Lithic Scatter	Unknown
48SU3954	*No Information*	Unknown
48SU3955	*No Information*	Unknown
48SU3856	*No Information*	Unknown
48SU3958	P - Artifacts and Features - Chipping/Knapping - Hearths/FCR	Not Eligible
48SU3959	P - Artifacts and Features - Habitation - Hearths/FCR	Eligible
48SU3967	P - Open Camp/Lithic Scatter	Not Eligible
48SU3968	P - Open Camp/Lithic Scatter	Not Eligible
48SU3969	P - Open Camp/Lithic Scatter	Not Eligible
48SU3970	P - Open Camp/Lithic Scatter	Not Eligible
48SU3971	P - Cairn, Cache, Rock Piles	Unknown
48SU3972	P - Open Camp/Lithic Scatter	Unknown
48SU3973	P - Open Camp/Lithic Scatter	Not Eligible
48SU3987	P - Lithic Scatter	Eligible
48SU3997	P - Open Camp, Occupation	Not Eligible
48SU4035	P - Lithic Scatter	Not Eligible
48SU4036	P - Open Camp, Occupation	Not Eligible
48SU4050	P - Artifacts and Features - Habitation - Ceramics	Unknown
48SU4062	P - Artifacts and Features - Milling/Vegetable Processing - Hearths/FCR	Unknown
48SU4063	P - Artifacts and Features - Chipping/Knapping - Hearths/FCR	Unknown
48SU4064	P - Lithic Scatter	Unknown
48SU4065	P - Artifacts and Features - Chipping/Knapping - Hearths/FCR	Eligible
48SU4066	P - Artifacts and Features - Chipping/Knapping - Hearths/FCR	Unknown
48SU4067	P - Artifacts and Features - Chipping/Knapping - Hearths/FCR	Unknown
48SU4069	P - Artifacts and Features - Chipping/Knapping - Hearths/FCR	Unknown
48SU4070	P - Lithic Scatter	Not Eligible
48SU4080	P - Artifacts and Features - Chipping/Knapping - Hearths/FCR	Unknown
48SU4081	P - Lithic Scatter	Unknown
48SU4082	P - Lithic Scatter	Unknown
48SU4083	P - Artifacts and Features - Habitation - Interment/Burial	Unknown
48SU4084	P - Artifacts and Features - Chipping/Knapping - Hearths/FCR	Unknown
48SU4123	P - Feature - Other - Hearth/FCR	Unknown
48SU4125	P - Artifacts and Features - Chipping/Knapping - Hearths/FCR	Eligible
48SU4127	P - Artifacts and Features - Chipping/Knapping - Hearths/FCR	Unknown
48SU4128	P - Artifacts and Features - Chipping/Knapping - Hearths/FCR	Unknown
48SU4129	P - Artifacts and Features - Chipping/Knapping - Hearths/FCR	Unknown
48SU4130	P - Artifacts and Features - Chipping/Knapping - Hearths/FCR	Not Eligible
48SU4131	P - Artifacts and Features - Chipping/Knapping - Hearths/FCR	Not Eligible
48SU4132	P - Artifacts and Features - Milling/Vegetable Processing - Hearths/FCR	Not Eligible

FCR = fire-cracked rock; H = historic; M/C = multicomponent, prehistoric and historic; P = prehistoric

SITE ID	TYPE	ELIGIBILITY STATUS
48SU4133	P - Artifacts and Features - Chipping/Knapping - Hearths/FCR	Unknown
48SU4136	P - Lithic Scatter	Not Eligible
48SU4137	P - Artifacts and Features - Chipping/Knapping - Hearths/FCR	Unknown
48SU4138	P - Feature - Other - Hearth/FCR	Not Eligible
48SU4139	P - Artifacts and Features - Chipping/Knapping - Hearths/FCR	Not Eligible
48SU4147	P - Artifacts and Features - Chipping/Knapping - Hearths/FCR	Unknown
48SU4148	P - Feature - Other - Hearth/FCR	Unknown
48SU4153	P - Feature - Other - Hearth/FCR	Unknown
48SU4155	P - Artifacts and Features - Chipping/Knapping - Hearths/FCR	Not Eligible
48SU4157	P - Artifacts and Features - Chipping/Knapping - Stone Rings	Unknown
48SU4159	P - Artifacts and Features - Chipping/Knapping - Hearths/FCR	Unknown
48SU4169	P - Lithic Scatter	Unknown
48SU4170	P - Lithic Scatter	Not Eligible
48SU4171	P - Lithic Scatter - FCR - Habitation	Not Eligible
48SU4188	M/C - Debris	Not Eligible
48SU4189	P - Artifacts and Features - Chipping/Knapping - Hearths/FCR	Not Eligible
48SU4191	P - Lithic Scatter - FCR - Habitation	Eligible
48SU4192	M/C - Lithic Scatter	Not Eligible
48SU4209	M/C - Debris	Not Eligible
48SU4255	H - Debris	Not Eligible
48SU4266	P - Feature - Other - Hearth/FCR	Not Eligible
48SU4267	P - Lithic Scatter	Not Eligible
48SU4268	P - Artifacts and Features - Chipping/Knapping - Hearths/FCR	Not Eligible
48SU4269	P - Artifacts and Features - Chipping/Knapping - Hearths/FCR	Not Eligible
48SU4270	P - Artifacts and Features - Chipping/Knapping - Hearths/FCR	Not Eligible
48SU4281	P - Lithic Scatter - FCR - Habitation	Unknown
48SU4321	P - Artifacts and Features - Chipping/Knapping - Hearths/FCR	Unknown
48SU4361	H - Timber - Building	Not Eligible
48SU4362	H - Timber - Building (Rural)	Not Eligible
48SU4363	H - Timber - Building	Eligible
48SU4364	H - Timber - Building	Not Eligible
48SU4401	P - Feature - Habitation - Hearths/FCR	Not Eligible
48SU4423	P - Feature - Habitation - Hearths/FCR	Not Eligible
48SU4424	P - Open Camp, Occupation	Not Eligible
48SU4425	P - Lithic Scatter	Not Eligible
48SU4426	P - Lithic Scatter - FCR - Habitation	Not Eligible
48SU4445	P - Artifacts and Features - Chipping/Knapping - Hearths/FCR	Not Eligible
48SU4447	P - Feature - Habitation - Hearths/FCR	Not Eligible
48SU4448	P - Feature - Habitation - Hearths/FCR	Not Eligible
48SU4449	P - Feature - Habitation - Hearths/FCR	Not Eligible
48SU4450	P - Artifacts and Features - Chipping/Knapping - Hearths/FCR	Not Eligible
48SU4451	P - Open Camp, Occupation	Eligible
48SU4452	P - Open Camp, Occupation	Not Eligible
48SU4459	P - Feature - Habitation - Hearths/FCR	Not Eligible
48SU4461	P - Lithic Scatter - FCR - Habitation	Not Eligible
48SU4462	P - Feature - Habitation - Hearths/FCR	Not Eligible

FCR = fire-cracked rock; H = historic; M/C = multicomponent, prehistoric and historic; P = prehistoric

SITE ID	TYPE	ELIGIBILITY STATUS
48SU4463	P - Lithic Scatter	Not Eligible
48SU4464	P - Lithic Scatter	Not Eligible
48SU4465	P - Lithic Scatter	Not Eligible
48SU4466	P - Lithic Scatter	Not Eligible
48SU4467	P - Feature - Habitation - Hearths/FCR	Not Eligible
48SU4468	P - Feature - Habitation - Hearths/FCR	Not Eligible
48SU4469	P - Artifacts and Features - Chipping/Knapping - Hearths/FCR	Not Eligible
48SU4472	M/C - Debris	Not Eligible
48SU4473	M/C - Artifacts and Features - Chipping/Knapping - Hearths/FCR	Not Eligible
48SU4477	P - Feature - Habitation - Hearths/FCR	Not Eligible
48SU4478	P - Feature - Habitation - Hearths/FCR	Not Eligible
48SU4482	P - Lithic Scatter	Not Eligible
48SU4483	P - Feature - Habitation - Hearths/FCR	Eligible
48SU4484	P - Hearth, Firepit, FCR	Not Eligible
48SU4485	P - Hearth, Firepit, FCR	Not Eligible
48SU4486	P - Hearth, Firepit, FCR	Not Eligible
48SU4487	P - Open Camp, Occupation	Not Eligible
48SU4488	P - Open Camp, Occupation	Not Eligible
48SU4489	P - Open Camp, Occupation	Not Eligible
48SU4490	P - Lithic Scatter	Not Eligible
48SU4491	P - Open Camp, Occupation	Not Eligible
48SU4492	P - Lithic Scatter	Not Eligible
48SU4493	P - Open Camp, Occupation	Not Eligible
48SU4494	P - Lithic Scatter	Not Eligible
48SU4495	P - Lithic Scatter	Not Eligible
48SU4496	P - Lithic Scatter	Not Eligible
48SU4497	P - Feature - Habitation - Hearths/FCR	Not Eligible
48SU4504	P - Feature - Other - Hearth/FCR	Not Eligible
48SU4505	H - Transmission Line/Power Line	Not Eligible
48SU4509	P - Artifacts and Features - Habitation - Hearths/FCR	Not Eligible
48SU4672	P - Artifacts and Features - Milling/Vegetable Processing - Hearths/FCR	Not Eligible
48SU4684	P - Artifacts and Features - Chipping/Knapping - Hearths/FCR	Unknown
48SU4685	P - Artifacts and Features - Chipping/Knapping - Hearths/FCR	Not Eligible
48SU4686	P - Artifacts and Features - Chipping/Knapping - Hearths/FCR	Unknown
48SU4687	P - Open Camp, Occupation	Unknown
48SU4688	P - Artifacts and Features - Chipping/Knapping - Hearths/FCR	Unknown
48SU4689	P - Artifacts and Features - Chipping/Knapping - Hearths/FCR	Unknown
48SU4690	P - Artifacts and Features - Chipping/Knapping - Hearths/FCR	Unknown
48SU4691	P - Artifacts and Features - Chipping/Knapping - Hearths/FCR	Not Eligible
48SU4692	P - Open Camp, Occupation	Eligible
48SU4693	P - Artifacts and Features - Chipping/Knapping - Hearths/FCR	Not Eligible
48SU4694	P - Open Camp, Occupation	Unknown
48SU4695	P - Artifacts and Features - Chipping/Knapping - Hearths/FCR	Unknown
48SU4707	P - Artifacts and Features - Habitation - Hearths/FCR	Eligible
48SU4758	P - Artifacts and Features - Habitation - Hearths/FCR	Eligible
48SU4895	P - Lithic Scatter - FCR - Habitation	Not Eligible

FCR = fire-cracked rock; H = historic; M/C = multicomponent, prehistoric and historic; P = prehistoric

SITE ID	TYPE	ELIGIBILITY STATUS
48SU4896	P - Artifacts and Features - Chipping/Knapping - Hearths/FCR	Not Eligible
48SU4897	P - Artifacts and Features - Habitation - Hearths/FCR	Not Eligible
48SU4898	P - Artifacts and Features - Habitation - Hearths/FCR	Eligible
48SU4907	P - Artifacts and Features - Chipping/Knapping - Hearths/FCR	Not Eligible
48SU4908	P - Artifacts and Features - Habitation - Hearths/FCR	Not Eligible
48SU4912	P - Feature - Habitation - Hearths/FCR	Not Eligible
48SU4942	P - Lithic Scatter - FCR - Habitation	Not Eligible
48SU4944	P - Artifacts and Features - Habitation - Hearths/FCR	Not Eligible
48SU4945	P - Lithic Scatter	Not Eligible
48SU4957	M/C - Lithic Scatter	Unknown
48SU4967	P - Artifacts and Features - Milling/Vegetable Processing - Hearths/FCR	Not Eligible
48SU4968	P - Feature - Other - Hearth/FCR	Not Eligible
48SU4970	P - Open Camp, Occupation	Not Eligible
48SU4971	P - Open Camp, Occupation	Unknown
48SU4972	P - Open Camp, Occupation	Not Eligible
48SU4973	P - Open Camp, Occupation	Not Eligible
48SU4974	P - Open Camp, Occupation	Unknown
48SU4975	P - Open Camp, Occupation	Unknown
48SU4976	P - Open Camp, Occupation	Not Eligible
48SU4977	P - Lithic Scatter - FCR - Habitation	Eligible
48SU4978	P - Lithic Scatter	Eligible
48SU4979	P - Artifacts and Features - Chipping/Knapping - Hearths/FCR	Eligible
48SU4980	P - Open Camp, Occupation	Not Eligible
48SU4982	P - Lithic Scatter - FCR - Habitation	Not Eligible
48SU4983	P - Artifacts and Features - Chipping/Knapping - Hearths/FCR	Not Eligible
48SU5001	P - Artifacts and Features - Habitation - Hearths/FCR	Unknown
48SU5002	P - Open Camp, Occupation	Unknown
48SU5003	P - Open Camp, Occupation	Unknown
48SU5009	P - Lithic Scatter	Not Eligible
48SU5010	P - Artifacts and Features - Chipping/Knapping - Hearths/FCR	Unknown
48SU5016	P - Lithic Scatter	Not Eligible
48SU5017	P - Lithic Scatter	Not Eligible
48SU5042	P - Feature - Habitation - Hearths/FCR	Not Eligible
48SU5058	P - Lithic Scatter - FCR - Habitation	Not Eligible
48SU5059	P - Lithic Scatter - FCR - Habitation	Eligible
48SU5060	P - Lithic Scatter - FCR - Habitation	Not Eligible
48SU5061	P - Lithic Scatter - Milling/Vegetable Processing	Not Eligible
48SU5063	P - Lithic Scatter - FCR - Habitation	Not Eligible
48SU5064	P - Artifacts and Features - Chipping/Knapping - Hearths/FCR	Eligible
48SU5073	H - Cabin	Not Eligible
48SU5074	H - Debris	Not Eligible
48SU5075	P - Feature - Habitation - Hearths/FCR	Not Eligible
48SU5076	P - Lithic Scatter - FCR - Habitation	Not Eligible
48SU5082	P - Artifacts and Features - Chipping/Knapping - Hearths/FCR	Not Eligible
48SU5084	P - Artifacts and Features - Habitation - Hearths/FCR	Eligible
48SU5090	P - Lithic Scatter	Not Eligible

FCR = fire-cracked rock; H = historic; M/C = multicomponent, prehistoric and historic; P = prehistoric

SITE ID	TYPE	ELIGIBILITY STATUS
48SU5091	H - Building (Rural)	Not Eligible
48SU5093	P - Open Camp, Occupation	Not Eligible
48SU5095	P - Artifacts and Features - Chipping/Knapping - Hearths/FCR	Not Eligible
48SU5096	P - Open Camp, Occupation	Not Eligible
48SU5097	P - Artifacts and Features - Chipping/Knapping - Hearths/FCR	Not Eligible
48SU5098	P - Feature - Habitation - Hearths/FCR	Not Eligible
48SU5099	P - Feature - Habitation - Hearths/FCR	Not Eligible
48SU5100	P - Feature - Habitation - Hearths/FCR	Not Eligible
48SU5101	P - Feature - Habitation - Hearths/FCR	Not Eligible
48SU5102	P - Feature - Habitation - Hearths/FCR	Not Eligible
48SU5103	P - Cairn, Cache, Rock Piles	Unknown
48SU5104	P - Artifacts and Features - Habitation - Hearths/FCR	Eligible
48SU5105	P - Artifacts and Features - Habitation - Hearths/FCR	Not Eligible
48SU5133	P - Artifacts and Features - Chipping/Knapping - Hearths/FCR	Not Eligible
48SU5178	P - Feature - Habitation - Hearths/FCR	Not Eligible
48SU5180	P - Artifacts and Features - Chipping/Knapping - Hearths/FCR	Eligible
48SU5197	P - Open Camp/Hearths, Lithics	Not Eligible
48SU5230	P - Artifacts and Features - Butchering/Processing - Hearths/FCR	Not Eligible
48SU5230	P - Artifacts and Features - Chipping/Knapping - Hearths/FCR	Not Eligible
48SU5233	P - Lithic Scatter - FCR - Chipping/Knapping Station	Not Eligible
48SU5234	P - Artifacts and Features - Habitation - Hearths/FCR	Not Eligible
48SU5235	P - Artifacts and Features - Habitation - Hearths/FCR	Not Eligible
48SU5236	P - Lithic Scatter	Not Eligible
48SU5242	P - Artifacts and Features - Chipping/Knapping - Hearths/FCR	Eligible
48SU5243	P - Artifacts and Features - Chipping/Knapping - Hearths/FCR	Eligible
48SU5244	P - Artifacts and Features - Chipping/Knapping - Hearths/FCR	Not Eligible
48SU5256	M/C - Debris	Eligible
48SU5257	H - Debris	Not Eligible
48SU5258	P - Artifacts and Features - Chipping/Knapping - Hearths/FCR	Unknown
48SU5259	P - Lithic Scatter	Unknown
48SU5260	H - Stockherding Camp	Not Eligible
48SU5261	H - Debris	Not Eligible
48SU5262	P - Lithic Scatter - FCR - Habitation	Unknown
48SU5263	P - Lithic Scatter	Not Eligible
48SU5264	H - Road	Not Eligible
48SU5265	P - Lithic Scatter	Unknown
48SU5266	P - Lithic Scatter	Unknown
48SU5267	P - Lithic Scatter	Not Eligible
48SU5268	P - Lithic Scatter	Unknown
48SU5269	P - Artifacts and Features - Chipping/Knapping - Hearths/FCR	Unknown
48SU5270	P - Artifacts and Features - Chipping/Knapping - Hearths/FCR	Unknown
48SU5271	H - Stockherding Camp	Not Eligible
48SU5272	H - Stockherding Camp	Not Eligible
48SU5273	M/C - Lithic Scatter	Unknown
48SU5274	H - Stockherding Camp	Not Eligible
48SU5275	H - Stockherding Camp	Unknown

FCR = fire-cracked rock; H = historic; M/C = multicomponent, prehistoric and historic; P = prehistoric

SITE ID	TYPE	ELIGIBILITY STATUS
48SU5276	H - Ranching - Sheep Ranch	Eligible
48SU5277	M/C - Stockherding Camp	Not Eligible
48SU5278	H - Stockherding Camp	Not Eligible
48SU5279	H - Stockherding Camp	Not Eligible
48SU5280	P - Lithic Scatter	Not Eligible
48SU5281	H - Stockherding Camp	Not Eligible
48SU5282	H - Stockherding Camp	Not Eligible
48SU5283	M/C - Lithic Scatter	Unknown
48SU5284	H - Trash Dump	Not Eligible
48SU5285	P - Artifacts and Features	Unknown
48SU5286	P - Lithic Scatter	Unknown
48SU5287	P - Lithic Scatter	Unknown
48SU5288	P - Lithic Scatter	Unknown
48SU5289	P - Artifacts and Features - Lithic Procurement - Secondary	Unknown
48SU5290	P - Artifacts and Features - Habitation	Eligible
48SU5291	P - Lithic Scatter	Not Eligible
48SU5292	H - Stockherding Camp	Not Eligible
48SU5293	H - Stockherding Camp	Not Eligible
48SU5299	P - Lithic Scatter	Not Eligible
48SU5308	P - Lithic Scatter	Not Eligible
48SU5310	P - Feature - Habitation - Hearths/FCR	Not Eligible
48SU5312	P - Artifacts and Features - Chipping/Knapping - Hearths/FCR	Not Eligible
48SU5315	P - Lithic Scatter	Not Eligible
48SU5316	M/C - Ranching - Stockherding Camp	Not Eligible
48SU5317	P - Artifacts and Features - Chipping/Knapping - Hearths/FCR	Not Eligible
48SU5318	M/C - Stockherding Camp	Not Eligible
48SU5319	P - Lithic Scatter - FCR - Habitation	Not Eligible
48SU5320	M/C - Lithic Scatter	Eligible
48SU5335	P - Artifacts and Features - Habitation - Hearths/FCR	Not Eligible
48SU5343	P - Artifacts and Features - Chipping/Knapping - Hearths/FCR	Not Eligible
48SU5367	P - Lithic Scatter - FCR - Habitation	Not Eligible
48SU5369	*Unknown*	Not Eligible
48SU5383	P - Feature - Other - Hearth/FCR	Not Eligible
48SU5384	P - Artifacts and Features - Habitation - Hearths/FCR	Not Eligible
48SU5385	P - ROCK Alignments	Eligible
48SU5391	P - Artifacts and Features - Chipping/Knapping - Hearths/FCR	Eligible
48SU5393	P - Lithic Scatter - FCR - Habitation	Not Eligible
48SU5397	P - Lithic Scatter	Not Eligible
48SU5398	P - Artifacts and Features - Chipping/Knapping - Hearths/FCR	Not Eligible
48SU5404	P - Lithic Scatter	Unknown
48SU5405	P - Artifacts and Features - Chipping/Knapping - Hearths/FCR	Not Eligible
48SU5408	P - Artifacts and Features - Chipping/Knapping - Hearths/FCR	Eligible
48SU5409	H - Trail/Stage Route	Not Eligible
48SU5413	P - Artifacts and Features - Chipping/Knapping - Hearths/FCR	Eligible
48SU5414	P - Open Camp/Hearths	Not Eligible
48SU5415	P - Lithic Scatter - FCR - Habitation	Not Eligible

FCR = fire-cracked rock; H = historic; M/C = multicomponent, prehistoric and historic; P = prehistoric

SITE ID	TYPE	ELIGIBILITY STATUS
48SU5419	P - Hearth, Firepit, FCR	Not Eligible
48SU5420	P - Artifacts and Features - Butchering/Processing - Hearths/FCR	Not Eligible
48SU5424	P - Artifacts and Features - Chipping/Knapping - Hearths/FCR	Not Eligible
48SU5438	P - Artifacts and Features - Chipping/Knapping - Hearths/FCR	Not Eligible
48SU5448	P - Lithic Scatter	Not Eligible
48SU5452	P - Artifacts and Features - Chipping/Knapping - Hearths/FCR	Eligible
48SU5453	P - Lithic Scatter - FCR - Habitation	Not Eligible
48SU5454	P - Artifacts and Features - Chipping/Knapping - Hearths/FCR	Eligible
48SU5455	P - Lithic Scatter	Not Eligible
48SU5462	P - Open Camp/Hearths, Lithics	Not Eligible
48SU5471	P - Open Camp, Occupation	Not Eligible
48SU5472	P - Open Camp, Occupation	Eligible
48SU5473	H - Dam	Not Eligible
48SU5476	P - Open Camp, Occupation	Not Eligible
48SU5478	H - Debris	Not Eligible
48SU5605	P - Open Camp/Hearths	Eligible
48SU5627	P - Artifacts and Features - Chipping/Knapping - Hearths/FCR	Not Eligible
48SU5628	P - Lithic Scatter	Not Eligible
48SU5629	P - Open Camp/Hearths, Lithics	Not Eligible
48SU5630	P - Lithic Scatter	Not Eligible
48SU5632	P - Artifacts and Features - Chipping/Knapping - Hearths/FCR	Unknown
48SU5633	P - Artifacts and Features - Chipping/Knapping - Hearths/FCR	Not Eligible
48SU5709	P - Artifacts and Features	Not Eligible
48SU5710	P - Artifacts and Features	Not Eligible
48SU5711	P - Artifacts and Features - Chipping/Knapping - Hearths/FCR	Eligible
48SU5712	P - Open Camp, Occupation	Not Eligible
48SU5716	P - Feature - Habitation - Hearths/FCR	Not Eligible
48SU5719	P - Artifacts and Features - Chipping/Knapping - Hearths/FCR	Not Eligible
48SU5720	P - Artifacts and Features - Chipping/Knapping - Hearths/FCR	Eligible
48SU5721	P - Open Camp/Hearths, Lithics	Eligible
48SU5724	P - Open Camp/Hearths, Lithics	Not Eligible
48SU5725	P - Open Camp/Hearths, Lithics	Not Eligible
48SU5726	P - Feature - Habitation - Hearths/FCR	Not Eligible
48SU5731	P - Lithic Scatter - FCR - Chipping/Knapping Station	Eligible
48SU5732	P - Lithic Scatter - FCR - Habitation	Not Eligible
48SU5733	P - Lithic Scatter	Not Eligible
48SU5744	P - Feature - Habitation - Hearths/FCR	Not Eligible
48SU5775	P - Artifacts and Features - Chipping/Knapping - Hearths/FCR	Eligible
48SU5776	P - Artifacts and Features - Chipping/Knapping - Hearths/FCR	Eligible
48SU5777	P - Artifacts and Features - Chipping/Knapping - Hearths/FCR	Eligible
48SU5778	P - Open Camp, Occupation	Not Eligible
48SU5782	P - Lithic Scatter	Not Eligible
48SU5785	P - Feature - Habitation - Hearths/FCR	Not Eligible
48SU5798	P - Open Camp/Hearths, Lithics	Not Eligible
48SU5799	P - Open Camp/Hearths, Lithics	Not Eligible
48SU5800	P - Open Camp/Hearths, Lithics	Unknown

FCR = fire-cracked rock; H = historic; M/C = multicomponent, prehistoric and historic; P = prehistoric

SITE ID	TYPE	ELIGIBILITY STATUS
48SU5801	P - Open Camp/Hearths, Lithics	Unknown
48SU5802	P - Open Camp/Hearths, Lithics	Eligible
48SU5803	P - Feature - Habitation - Hearths/FCR	Eligible
48SU5804	P - Open Camp/Hearths, Lithics	Not Eligible
48SU5805	M/C - Debris	Not Eligible
48SU5825	P - Open Camp/Hearths, Lithics	Not Eligible
48SU5826	P - Open Camp/Hearths, Lithics	Not Eligible
48SU5827	P - Open Camp/Hearths, Lithics	Not Eligible
48SU5828	P - Open Camp, Occupation	Not Eligible
48SU5833	P - Artifacts and Features - Chipping/Knapping - Hearths/FCR	Eligible
48SU5837	P - Open Camp/Hearths, Lithics	Not Eligible
48SU5839	P - Open Camp/Hearths, Lithics	Not Eligible
48SU5842	P - Feature - Habitation - Hearths/FCR	Not Eligible
48SU5843	P - Artifacts and Features - Chipping/Knapping - Hearths/FCR	Eligible
48SU5844	P - Artifacts and Features - Chipping/Knapping - Hearths/FCR	Eligible
48SU5875	P - Artifacts and Features - Chipping/Knapping - Hearths/FCR	Not Eligible
48SU5879	P - Artifacts and Features - Chipping/Knapping - Hearths/FCR	Not Eligible
48SU5880	P - Open Camp/Hearths, Lithics	Not Eligible
48SU5900	P - Artifacts and Features - Chipping/Knapping - Hearths/FCR	Eligible
48SU5901	P - Open Camp/Hearths, Lithics	Not Eligible
48SU5902	M/C - Debris	Not Eligible
48SU5903	P - Open Camp/Hearths, Lithics	Not Eligible
48SU5904	P - Lithic Scatter	Not Eligible
48SU5905	P - Lithic Scatter	Not Eligible
48SU5906	P - Open Camp/Hearths, Lithics	Not Eligible
48SU5907	P - Open Camp/Hearths, Lithics	Not Eligible
48SU5908	P - Open Camp/Hearths, Lithics	Not Eligible
48SU5919	P - Artifacts and Features - Chipping/Knapping - Hearths/FCR	Unknown
48SU5967	M/C - Trash Dump	Eligible
48SU5998	P - Artifacts and Features - Chipping/Knapping - Hearths/FCR	Eligible
48SU6005	P - Artifacts and Features - Chipping/Knapping - Hearths/FCR	Not Eligible
48SU6050	H - Building(Urban)	Eligible
48SU6064	P - Open Camp/Hearths, Lithics	Eligible
48SU6065	P - Artifacts and Features - Chipping/Knapping - Hearths/FCR	Not Eligible
48SU6083	P - Artifacts and Features - Habitation - Hearths/FCR	Eligible
48SU6084	P - Artifacts and Features - Habitation - Hearths/FCR	Eligible
48SU6085	P - Lithic Scatter	Eligible
48SU6086	H - Cabin	Eligible
48SU6092	P - Open Camp, Occupation	Not Eligible
48SU6093	P - Lithic Scatter - FCR - Habitation	Not Eligible
48SU6094	P - Lithic Scatter - FCR - Habitation	Not Eligible
48SU6095	P - Open Camp, Occupation	Not Eligible
48SU6096	P - Open Camp, Occupation	Not Eligible
48SU6097	P - Open Camp, Occupation	Not Eligible
48SU6098	P - Lithic Scatter - FCR - Habitation	Not Eligible
48SU6099	P - Lithic Scatter - FCR - Habitation	Not Eligible

FCR = fire-cracked rock; H = historic; M/C = multicomponent, prehistoric and historic; P = prehistoric

SITE ID	TYPE	ELIGIBILITY STATUS
48SU6100	P - Lithic Scatter - FCR - Habitation	Not Eligible
48SU6101	P - Lithic Scatter - FCR - Habitation	Not Eligible
48SU6106	P - Artifacts and Features - Chipping/Knapping - Hearths/FCR	Eligible
48SU6107	P - Artifacts and Features - Chipping/Knapping - Hearths/FCR	Not Eligible
48SU6108	P - Artifacts and Features - Chipping/Knapping - Hearths/FCR	Not Eligible
48SU6111	P - Feature - Habitation - Hearths/FCR	Not Eligible
48SU6179	P - Lithic Scatter - FCR - Habitation	Not Eligible
48SU6182	P - Artifacts and Features - Chipping/Knapping - Hearths/FCR	Eligible
48SU6183	P - Feature - Habitation - Hearths/FCR	Not Eligible
48SU6184	P - Artifacts and Features - Chipping/Knapping - Hearths/FCR	Eligible
48SU6185	P - Feature - Habitation - Hearths/FCR	Not Eligible
48SU6186	P - Artifacts and Features - Chipping/Knapping - Hearths/FCR	Not Eligible
48SU6187	P - Feature - Habitation - Hearths/FCR	Not Eligible
48SU6188	P - Artifacts and Features - Chipping/Knapping - Hearths/FCR	Eligible
48SU6189	P - Lithic Scatter - FCR - Habitation	Not Eligible
48SU6190	P - Lithic Scatter - FCR - Habitation	Unknown
48SU6191	P - Feature - Habitation - Stone Rings	Unknown
48SU6192	P - Artifacts and Features - Chipping/Knapping - Hearths/FCR	Unknown
48SU6201	P - Lithic Scatter	Not Eligible
48SU6202	P - Lithic Scatter	Not Eligible
48SU6208	M/C - Lithic Scatter	Eligible
48SU6209	H - Debris	Not Eligible
48SU6224	P - Open Camp, Occupation	Not Eligible
48SU6225	P - Lithic Scatter	Not Eligible
48SU6226	P - Lithic Scatter	Eligible
48SU6227	No Information	Unknown
48SU6253	P - Open Camp/Hearths, Lithics	Eligible
48SU6261	H - Cabin	Not Eligible
48SU6263	H - Cabin	Not Eligible
48SU6271	P - Feature - Habitation - Hearths/FCR	Not Eligible
48SU6272	P - Hearth, Firepit, FCR	Eligible
48SU6274	P - Hearth, Firepit, FCR	Not Eligible
48SU6275	P - Hearth, Firepit, FCR	Not Eligible
48SU6308	P - Artifacts and Features - Chipping/Knapping - Hearths/FCR	Not Eligible
48SU6309	P - Lithic Scatter	Not Eligible
48SU6310	P - Feature - Habitation - Hearths/FCR	Unknown
48SU6311	P - Feature - Habitation - Hearths/FCR	Not Eligible
48SU6317	P - Open Camp/Hearths, Lithics	Not Eligible
48SU6336	H - Military - Other	Eligible
48SU6347	P - Artifacts and Features - Chipping/Knapping - Hearths/FCR	Not Eligible
48SU6348	P - Hearth, Firepit, FCR	Unknown
48SU6349	P - Artifacts and Features - Chipping/Knapping - Hearths/FCR	Eligible
48SU6350	P - Open Camp/Hearths, Lithics	Not Eligible
48SU6359	P - Lithic Scatter	Not Eligible
48SU6367	H - Canal	Not Eligible
48SU6373	P - Artifacts and Features - Chipping/Knapping - Hearths/FCR	Eligible

FCR = fire-cracked rock; H = historic; M/C = multicomponent, prehistoric and historic; P = prehistoric

SITE ID	TYPE	ELIGIBILITY STATUS
48SU6381	P - Artifacts and Features - Chipping/Knapping - Hearths/FCR	Eligible
48SU6382	P - Lithic Scatter	Not Eligible
48SU6383	P - Lithic Scatter	Not Eligible
48SU6386	P - Feature - Habitation - Hearths/FCR	Not Eligible
48SU6387	P - Feature - Habitation - Hearths/FCR	Not Eligible
48SU6388	H - Other	Not Eligible
48SU6391	P - Artifacts and Features - Chipping/Knapping - Hearths/FCR	Not Eligible
48SU6392	P - Artifacts and Features - Chipping/Knapping - Hearths/FCR	Eligible
48SU6393	P - Artifacts and Features - Chipping/Knapping - Hearths/FCR	Eligible
48SU6412	P - Artifacts and Features - Chipping/Knapping - Hearths/FCR	Not Eligible
48SU6413	P - Artifacts and Features - Chipping/Knapping - Hearths/FCR	Not Eligible
48SU6414	P - Lithic Scatter	Not Eligible
48SU6415	P - Artifacts and Features - Chipping/Knapping - Hearths/FCR	Not Eligible
48SU6416	P - Artifacts and Features - Chipping/Knapping - Hearths/FCR	Not Eligible
48SU6419	P - Lithic Scatter	Not Eligible
48SU6420	P - Open Camp, Occupation	Eligible
48SU6422	P - Open Camp/Hearths, Lithics	Not Eligible
48SU6423	P - Open Camp/Hearths, Lithics	Eligible
48SU6424	P - Open Camp/Hearths, Lithics	Eligible
48SU6425	P - Artifacts and Features - Chipping/Knapping - Hearths/FCR	Not Eligible
48SU6426	P - Artifacts and Features - Chipping/Knapping - Hearths/FCR	Not Eligible
48SU6429	P - Lithic Scatter	Not Eligible
48SU6430	P - Lithic Scatter	Not Eligible
48SU6431	P - Lithic Scatter	Eligible
48SU6432	H - Stockherding Camp	Not Eligible
48SU6433	P - Lithic Scatter	Not Eligible
48SU6434	P - Lithic Scatter	Eligible
48SU6435	P - Lithic Scatter	Not Eligible
48SU6436	P - Lithic Scatter	Not Eligible
48SU6439	P - Artifacts and Features - Chipping/Knapping - Hearths/FCR	Eligible
48SU6440	P - Human Remains - Other - Burial	Not Eligible
48SU6441	P - Artifacts and Features - Chipping/Knapping - Hearths/FCR	Not Eligible
48SU6451	P - Hearth, Firepit, FCR	Not Eligible
48SU6452	P - Lithic Scatter	Not Eligible
48SU6454	P - Artifacts and Features - Chipping/Knapping - Hearths/FCR	Eligible
48SU6455	P - Artifacts and Features - Chipping/Knapping - Hearths/FCR	Eligible
48SU6456	P - Artifacts and Features - Chipping/Knapping - Hearths/FCR	Eligible
48SU6460	P - Lithic Scatter	Not Eligible
48SU6461	P - Lithic Scatter	Not Eligible
48SU6464	P - Artifacts and Features - Chipping/Knapping - Hearths/FCR	Not Eligible
48SU6465	P - Artifacts and Features - Chipping/Knapping - Hearths/FCR	Not Eligible
48SU6471	P - Open Camp, Occupation	Not Eligible
48SU6472	H - Dam	Not Eligible
48SU6473	P - Lithic Scatter	Eligible
48SU6474	P - Lithic Scatter	Eligible
48SU6475	P - Lithic Scatter	Eligible

FCR = fire-cracked rock; H = historic; M/C = multicomponent, prehistoric and historic; P = prehistoric

SITE ID	TYPE	ELIGIBILITY STATUS
48SU6476	P - Lithic Scatter	Eligible
48SU6477	P - Lithic Scatter	Not Eligible
48SU6478	P - Lithic Scatter	Not Eligible
48SU6479	P - Lithic Scatter	Not Eligible
48SU6480	P - Lithic Scatter	Not Eligible
48SU6486	P - Lithic Scatter - FCR - Habitation	Not Eligible
48SU6487	P - Lithic Scatter	Not Eligible
48SU6488	P - Lithic Scatter - FCR - Habitation	Not Eligible
48SU6489	P - Lithic Scatter - FCR - Habitation	Not Eligible
48SU6514	P - Artifacts and Features - Chipping/Knapping - Hearths/FCR	Not Eligible
48SU6515	P - Artifacts and Features - Chipping/Knapping - Hearths/FCR	Not Eligible
48SU6516	P - Lithic Scatter	Not Eligible
48SU6519	P - Feature - Habitation - Hearths/FCR	Not Eligible
48SU6520	P - Open Camp/Hearths, Lithics	Not Eligible
48SU6521	P - Open Camp/Hearths, Lithics	Not Eligible
48SU6530	P - Open Camp/Hearths, Lithics	Eligible
48SU6532	P - Feature - Habitation - Hearths/FCR	Eligible
48SU6535	P - Lithic Scatter - FCR - Habitation	Not Eligible
48SU6539	P - Artifacts and Features - Chipping/Knapping - Hearths/FCR	Not Eligible
48SU6540	P - Artifacts and Features - Chipping/Knapping - Hearths/FCR	Eligible
48SU6541	P - Artifacts and Features - Chipping/Knapping - Hearths/FCR	Not Eligible
48SU6555	P - Open Camp, Occupation	Eligible
48SU6570	P - Hearth, Firepit, FCR	Not Eligible
48SU6571	P - Feature - Habitation - Hearths/FCR	Not Eligible
48SU6584	P - Artifacts and Features - Chipping/Knapping - Hearths/FCR	Not Eligible
48SU6593	P - Hearth, Firepit, FCR	Not Eligible
48SU6594	P - Artifacts and Features - Habitation - Hearths/FCR	Not Eligible
48SU6610	P - Feature - Habitation - Hearths/FCR	Not Eligible
48SU6614	P - Artifacts and Features - Chipping/Knapping - Hearths/FCR	Not Eligible
48SU6615	P - Artifacts and Features - Chipping/Knapping - Hearths/FCR	Not Eligible
48SU6616	P - Artifacts and Features - Chipping/Knapping - Hearths/FCR	Not Eligible
48SU6619	P - Lithic Scatter - FCR - Habitation	Not Eligible
48SU6620	H - Other	Not Eligible
48SU6627	P - Lithic Scatter	Not Eligible
48SU6628	P - Artifacts and Features - Chipping/Knapping - Hearths/FCR	Eligible
48SU6629	P - Lithic Scatter	Not Eligible
48SU6630	P - Artifacts and Features - Chipping/Knapping - Hearths/FCR	Not Eligible
48SU6631	P - Artifacts and Features - Chipping/Knapping - Hearths/FCR	Eligible
48SU6632	P - Lithic Scatter	Not Eligible
48SU6633	P - Lithic Scatter	Eligible
48SU6634	*No Information*	Unknown
48SU6635	H - Canal	Not Eligible
48SU6639	P - Artifacts and Features - Chipping/Knapping - Hearths/FCR	Not Eligible
48SU6640	P - Artifacts and Features - Chipping/Knapping - Hearths/FCR	Not Eligible
48SU6641	P - Artifacts and Features - Chipping/Knapping - Hearths/FCR	Eligible
48SU6642	P - Artifacts and Features - Chipping/Knapping - Hearths/FCR	Not Eligible

FCR = fire-cracked rock; H = historic; M/C = multicomponent, prehistoric and historic; P = prehistoric

SITE ID	TYPE	ELIGIBILITY STATUS
48SU6644	P - Artifacts and Features - Chipping/Knapping - Hearths/FCR	Not Eligible
48SU6649	P - Open Camp, Occupation	Eligible
48SU6650	P - Feature - Habitation - Hearths/FCR	Eligible
48SU6651	P - Lithic Scatter	Not Eligible
48SU6652	P - Feature - Habitation - Hearths/FCR	Eligible
48SU6653	P - Artifacts and Features - Chipping/Knapping - Hearths/FCR	Eligible
48SU6662	P - Lithic Scatter - FCR - Habitation	Not Eligible
48SU6676	H - Trash Dump	Not Eligible
48SU6688	P - Lithic Scatter - FCR - Habitation	Not Eligible
48SU6700	P - Open Camp, Occupation	Not Eligible
48SU6701	P - Feature - Habitation - Hearths/FCR	Not Eligible
48SU6702	P - Feature - Habitation - Hearths/FCR	Not Eligible
48SU6703	P - Artifacts and Features - Chipping/Knapping - Hearths/FCR	Not Eligible
48SU6704	P - Open Camp, Occupation	Not Eligible
48SU6710	P - Artifacts and Features - Chipping/Knapping - Hearths/FCR	Not Eligible
48SU6714	P - Artifacts and Features - Chipping/Knapping - Hearths/FCR	Not Eligible
48SU6717	P - Artifacts and Features - Chipping/Knapping - Hearths/FCR	Eligible
48SU6718	P - Artifacts and Features - Chipping/Knapping - Hearths/FCR	Not Eligible
48SU6719	P - Artifacts and Features - Chipping/Knapping - Hearths/FCR	Not Eligible
48SU6720	P - Artifacts and Features - Chipping/Knapping - Hearths/FCR	Not Eligible
48SU6721	P - Artifacts and Features - Chipping/Knapping - Hearths/FCR	Eligible
48SU6733	H - Canal	Not Eligible
48SU6736	P - Artifacts and Features - Chipping/Knapping - Hearths/FCR	Not Eligible
48SU6737	P - Artifacts and Features - Chipping/Knapping - Hearths/FCR	Not Eligible
48SU6738	*No Information*	Unknown
48SU6739	P - Open Camp, Occupation	Not Eligible
48SU6741	P - Artifacts and Features	Not Eligible
48SU6745	P - Feature - Habitation - Hearths/FCR	Not Eligible
48SU6746	P - Feature - Habitation - Hearths/FCR	Not Eligible
48SU6747	*No Information*	Unknown
48SU6755	P - Artifacts and Features - Chipping/Knapping - Hearths/FCR	Not Eligible
48SU6756	P - Artifacts and Features - Chipping/Knapping - Hearths/FCR	Eligible
48SU6757	H - Canal	Not Eligible
48SU6758	H - Canal	Not Eligible
48SU6759	P - Artifacts and Features - Chipping/Knapping - Hearths/FCR	Not Eligible
48SU6762	M/C - Debris	Not Eligible
48SU6763	P - Artifacts and Features - Habitation - Hearths/FCR	Not Eligible
48SU6766	M/C - Debris	Not Eligible
48SU6771	P - Lithic Scatter	Not Eligible
48SU6774	P - Artifacts and Features - Chipping/Knapping - Hearths/FCR	Not Eligible
48SU6780	P - Artifacts and Features - Chipping/Knapping - Hearths/FCR	Not Eligible
48SU6784	P - Artifacts and Features - Chipping/Knapping - Hearths/FCR	Not Eligible
48SU6785	P - Artifacts and Features - Chipping/Knapping - Hearths/FCR	Not Eligible
48SU6786	P - Open Camp, Occupation	Eligible
48SU6787	P - Cairn, Cache,Rock Piles	Unknown
48SU6788	P - Artifacts and Features - Chipping/Knapping - Hearths/FCR	Eligible

FCR = fire-cracked rock; H = historic; M/C = multicomponent, prehistoric and historic; P = prehistoric

SITE ID	TYPE	ELIGIBILITY STATUS
48SU6789	P - Lithic Scatter - FCR - Habitation	Not Eligible
48SU6791	P - Artifacts and Features - Chipping/Knapping - Hearths/FCR	Not Eligible
48SU6796	P - Lithic Scatter	Not Eligible
48SU6797	P - Lithic Scatter - FCR - Habitation	Not Eligible
48SU6798	P - Open Camp, Occupation	Not Eligible
48SU6799	P - Artifacts and Features - Chipping/Knapping - Hearths/FCR	Not Eligible
48SU6800	P - Artifacts and Features - Chipping/Knapping - Hearths/FCR	Eligible
48SU6814	P - Artifacts and Features - Chipping/Knapping - Hearths/FCR	Not Eligible
48SU6819	P - Hearth, Firepit, FCR	Not Eligible
48SU6822	P - Artifacts and Features - Chipping/Knapping - Hearths/FCR	Not Eligible
48SU6823	P - Lithic Scatter	Unknown
48SU6825	P - Lithic Scatter	Unknown
48SU6826	P - Lithic Scatter	Unknown
48SU6827	P - Lithic Scatter	Unknown
48SU6831	P - Cairn	Unknown
48SU6842	P - Lithic Scatter	Not Eligible
48SU6854	P - Artifacts and Features - Chipping/Knapping - Ceramics	Unknown
48SU6868	M/C - Debris	Unknown
48SU6928	P - Feature - Habitation - Hearths/FCR	Not Eligible
48SU6929	P - Feature - Habitation - Hearths/FCR	Not Eligible
48SU6930	P - Feature - Habitation - Hearths/FCR	Eligible
48SU6931	P - Feature - Habitation - Hearths/FCR	Eligible
48SU6932	P - Feature - Habitation - Hearths/FCR	Not Eligible
48SU6936	P - Artifacts and Features - Chipping/Knapping - Hearths/FCR	Eligible
48SU6938	P - Artifacts and Features - Chipping/Knapping - Hearths/FCR	Not Eligible
48SU6939	P - Hearth, Firepit, FCR	Not Eligible
48SU6940	P - Hearth, Firepit, FCR	Eligible
48SU6941	M/C - Artifacts and Features - Chipping/Knapping - Hearths/FCR	Eligible
48SU6950	P - Lithic Scatter - FCR - Habitation	Not Eligible
48SU7030	H - Canal	Not Eligible
48SU7042	P - Artifacts and Features - Chipping/Knapping - Hearths/FCR	Eligible
48SU7043	H - Canal	Not Eligible
48SU7044	H - Canal	Not Eligible
48SU7045	P - Artifacts and Features - Chipping/Knapping - Hearths/FCR	Eligible
48SU7065	P - Artifacts and Features - Chipping/Knapping - Hearths/FCR	Eligible
48SU7097	P - Lithic Scatter	Not Eligible
48SU7098	P - Artifacts and Features - Chipping/Knapping - Hearths/FCR	Not Eligible
48SU7198	P - Open Camp, Occupation	Not Eligible
48SU7199	P - Lithic Scatter	Not Eligible
48SU7200	P - Open Camp, Occupation	Not Eligible
48SU7201	P - Open Camp, Occupation	Not Eligible
48SU7202	P - Open Camp, Occupation	Not Eligible
48SU7203	P - Open Camp, Occupation	Not Eligible
48SU7216	M/C - Debris	Unknown
48SU7231	P - Lithic Scatter - FCR - Habitation	Unknown
48SU7232	H - Debris	Not Eligible

FCR = fire-cracked rock; H = historic; M/C = multicomponent, prehistoric and historic; P = prehistoric

SITE ID	TYPE	ELIGIBILITY STATUS
48SU7240	P - Lithic Scatter - FCR - Habitation	Unknown
48SU7241	P - Artifacts and Features - Chipping/Knapping - Hearths/FCR	Unknown
48SU7249	P - Lithic Scatter - FCR - Habitation	Unknown
48SU7250	M/C - Debris	Unknown
48SU7259	P - Artifacts and Features - Chipping/Knapping - Hearths/FCR	Unknown
48SU7261	P - Lithic Scatter - FCR - Habitation	Unknown
48SU7263	M/C - Artifacts and Features - Chipping/Knapping - Hearths/FCR	Eligible
48SU7267	M/C - Artifacts and Features - Chipping/Knapping - Hearths/FCR	Eligible
48SU7268	P - Artifacts and Features - Chipping/Knapping - Hearths/FCR	Eligible
48SU7269	P - Artifacts and Features - Chipping/Knapping - Hearths/FCR	Eligible
48SU7270	P - Lithic Scatter	Not Eligible
48SU7271	P - Lithic Scatter	Not Eligible
48SU7272	P - Feature - Habitation - Hearths/FCR	Not Eligible
48SU7273	P - Feature - Habitation - Hearths/FCR	Not Eligible
48SU7275	P - Artifacts and Features - Butchering/Processing - Hearths/FCR	Not Eligible
48SU7276	P - Feature - Habitation - Hearths/FCR	Not Eligible
48SU7308	H - Site	Eligible
48SU7311	H - Ranching - Stock Driveway	NRHP-listed
48SU7312	H - Ranching - Stock Driveway	NRHP-listed
48SU7313	M/C - Debris	Not Eligible
48SU7315	P - Artifacts and Features - Chipping/Knapping - Hearths/FCR	Not Eligible
48SU7323	P - Artifacts and Features - Chipping/Knapping - Hearths/FCR	Not Eligible
48SU7330	P - Artifacts and Features - Habitation - Bone	Not Eligible
48SU7331	P - Artifacts and Features - Chipping/Knapping - Hearths/FCR	Eligible
48SU7333	P - Feature - Habitation - Hearths/FCR	Not Eligible
48SU7334	P - Artifacts and Features - Chipping/Knapping - Hearths/FCR	Not Eligible
48SU7341	H - Site	Eligible
48SU7348	H -Irrigation - Canal	Eligible
48SU7349	P - Artifacts and Features - Habitation - Bone	Not Eligible
48SU7351	H - Cabin	Not Eligible
48SU7352	H - Cabin	Not Eligible
48SU7353	H - Energy Exploration - Trash Dump	Eligible
48SU7358	P - Open Camp/Hearths, Lithics	Eligible
48SU7359	P - Open Camp/Hearths, Lithics	Not Eligible
48SU7362	P - Artifacts and Features - Chipping/Knapping - Hearths/FCR	Eligible
48SU7363	P - Feature - CEREMONIAL	Eligible
48SU7364	P - Lithic Scatter	Eligible
48SU7365	P - Lithic Scatter	Eligible
48SU7366	H - Debris	Not Eligible
48SU7367	P - Lithic Scatter	Not Eligible
48SU7368	P - Lithic Scatter	Eligible
48SU7369	P - Lithic Scatter	Not Eligible
48SU7370	P - Lithic Scatter	Not Eligible
48SU7371	P - Lithic Scatter	Not Eligible
48SU7372	P - Lithic Scatter	Not Eligible
48SU7378	P - Lithic Scatter	Not Eligible

FCR = fire-cracked rock; H = historic; M/C = multicomponent, prehistoric and historic; P = prehistoric

SITE ID	TYPE	ELIGIBILITY STATUS
48SU7379	P - Lithic Scatter	Not Eligible
48SU7383	P - Lithic Scatter - FCR - Habitation	Not Eligible
48SU7407	P - Feature - Habitation - Hearths/FCR	Not Eligible
48SU7408	P - Feature - Habitation - Hearths/FCR	Not Eligible
48SU7409	P - Feature - Habitation - Hearths/FCR	Not Eligible
48SU7410	P - Feature - Habitation - Hearths/FCR	Not Eligible
48SU7411	P - Feature - Habitation - Hearths/FCR	Not Eligible
48SU7460	P - Feature - Habitation - Hearths/FCR	Not Eligible
48SU7461	P - Artifacts and Features - Butchering/Processing - Bone	Not Eligible
48SU7462	H - Canal	Eligible
48SU7471	P - Lithic Scatter	Not Eligible
48SU7483	P - Lithic Scatter - FCR - Habitation	Not Eligible
48SU7484	M/C - Debris	Not Eligible
48SU7489	P - Artifacts and Features - Chipping/Knapping - Hearths/FCR	Not Eligible
48SU7490	P - Artifacts and Features - Milling/Vegetable Processing - Hearths/FCR	Eligible
48SU7492	P - Lithic Scatter - FCR - Chipping/Knapping Station	Not Eligible
48SU7506	P - Artifacts and Features - Chipping/Knapping - Hearths/FCR	Eligible
48SU7516	P - Feature - Other - Hearth/FCR	Not Eligible
48SU7517	P - Artifacts and Features - Chipping/Knapping - Hearths/FCR	Not Eligible
48SU7524	M/C - Debris	Not Eligible
48SU7551	P - Artifacts and Features - Chipping/Knapping - Hearths/FCR	Not Eligible
48SU7552	P - Artifacts and Features - Chipping/Knapping - Hearths/FCR	Not Eligible
48SU7553	P - Artifacts and Features - Chipping/Knapping - Hearths/FCR	Not Eligible
48SU7554	P - Artifacts and Features - Chipping/Knapping - Hearths/FCR	Not Eligible
48SU7555	P - Artifacts and Features - Chipping/Knapping - Hearths/FCR	Not Eligible
48SU7556	P - Artifacts and Features - Chipping/Knapping - Hearths/FCR	Not Eligible
48SU7557	P - Artifacts and Features - Chipping/Knapping - Hearths/FCR	Not Eligible
48SU7558	P - Artifacts and Features - Chipping/Knapping - Hearths/FCR	Not Eligible
48SU7559	P - Artifacts and Features - Chipping/Knapping - Hearths/FCR	Not Eligible
48SU7560	P - Artifacts and Features - Chipping/Knapping - Hearths/FCR	Not Eligible
48SU7565	P - Artifacts and Features - Chipping/Knapping - Hearths/FCR	Not Eligible
48SU7566	H - Conservation - CCC Camp/Construction	Not Eligible
48SU7567	H - Cabin	Not Eligible
48SU7568	H - Canal	Eligible
48SU7569	H - Canal	Eligible
48SU7576	P - Artifacts and Features - Chipping/Knapping - Hearths/FCR	Not Eligible
48SU7577	P - Artifacts and Features - Chipping/Knapping - Hearths/FCR	Not Eligible
48SU7578	P - Artifacts and Features - Chipping/Knapping - Hearths/FCR	Not Eligible
48SU7579	P - Artifacts and Features - Chipping/Knapping - Hearths/FCR	Not Eligible
48SU7580	P - Artifacts and Features - Chipping/Knapping - Hearths/FCR	Not Eligible
48SU7584	H - Recreation Cabin	Not Eligible
48SU7585	H - Canal	Eligible
48SU7586	P - Artifacts and Features - Chipping/Knapping - Hearths/FCR	Not Eligible
48SU7598	P - Lithic Scatter	Not Eligible
48SU7599	P - Lithic Scatter	Not Eligible
48SU7600	P - Lithic Scatter	Not Eligible

FCR = fire-cracked rock; H = historic; M/C = multicomponent, prehistoric and historic; P = prehistoric

SITE ID	TYPE	ELIGIBILITY STATUS
48SU7601	P - Lithic Scatter - Milling/Vegetable Processing	Eligible
48SU7602	P - Lithic Scatter	Eligible
48SU7603	P - Lithic Scatter	Not Eligible
48SU7604	P - Lithic Scatter	Not Eligible
48SU7605	P - Artifacts and Features - Milling/Vegetable Processing	Eligible
48SU7607	H - Debris	Not Eligible
48SU7608	H - Cabin	Not Eligible
48SU7612	P - Lithic Scatter	Not Eligible
48SU7613	P - Artifacts and Features	Not Eligible
48SU7614	P - Artifacts and Features	Not Eligible

Source: Wyoming SHPO, data as of February 21, 2017

FCR = fire-cracked rock; H = historic; M/C = multicomponent, prehistoric and historic; P = prehistoric

Appendix E.
Geology, Aquifers, and Soils Summary

This page is left intentionally blank.

MEMORANDUM

Project 16123

TO: Ron Steg – Tetra Tech, Inc.

FROM: Edwin R. Friend, P.G., P.E. – RJH Consultants, Inc.

DATE: February 14, 2017

RE: New Fork River Watershed
Geology Aquifers and Soils Summary Memorandum

Section 1 – Introduction

1.1 Purpose and Background

The Wyoming Water Development Commission (WWDC) retained Tetra Tech, with the assistance of RJH Consultants, Inc. and Rio Verde Engineering, to perform a Level I study for the New Fork River Watershed near Pinedale, Wyoming. The purpose of this memorandum is to present RJH Consultants, Inc. (RJH) evaluation of the geologic and groundwater conditions in the basin in order to better characterize the watershed hydrogeology and the potential for groundwater development in subwatersheds. The New Fork River Watershed is located within Sublette County and covers approximately 1,230,000 acres which encompasses the primary stream systems of the New Fork and East Fork Rivers. Numerous tributaries are also within the watershed including Willow Creek, Lake Creek, Pine Creek, Pole Creek, Falls Creek, and Boulder Creek.

1.2 Scope

RJH performed the following scope of work:

- Reviewed existing background information and previous reports.
- Collected and reviewed available data pertaining to geologic and groundwater conditions throughout the watershed.
- Collected and reviewed available data pertaining to existing wells throughout the watershed and their characteristics.
- Prepared this Memorandum.

1.3 Authorization and Project Personnel

This work was performed in accordance with the Consultant Contract for Services between Tetra Tech, Inc. and RJH dated June 22, 2016. RJH personnel responsible for the execution of this work included:

Project Manager	Edwin Friend, P.E., P.G.
Project Engineer	Kevin Mininger, P.E., P.G.
Geological Engineer	Andrea Christians, E.I.

Section 2 - Regional Geology

The New Fork River watershed is located within the Middle Rocky Mountain and Wyoming Basin Physiographic Provinces. The provinces are characterized by basins and rugged mountains (Hunt, 1967). The watershed begins in the Middle Rocky Mountain Province on the western flank of the Wind River Range. The Wind River Range is a northwest-trending asymmetric anticline with a Precambrian-age (greater than 540 million years old) core of plutonic rock which has been thrust to the southwest over sedimentary rocks within the Green River Basin (USGS, 2006b). From the Wind River Range, the watershed flows west into the Green River Basin, a part of the Wyoming Basin Province. The Wyoming Basin Province consists of generally flat lying unconsolidated deposits of the Quaternary period and Cenozoic to Paleozoic-age sedimentary rocks (less than 485 million years old).

Section 3 - Structural Geology

Numerous faults within the New Fork River watershed are evidence of tectonic deformation within the region. The locations of faults mapped by the U.S. Geological Survey (USGS) and Wyoming State Geological Survey (WGS) (Love and Christiansen, 1985; Oriel and Platt, 1980; and Scott and Sutherland, 2009) are shown on Figure 1. The watershed is characterized by a northwest trending thrust fault, which has forced Precambrian-age material over sedimentary rocks of the Green River Basin, along with generally northwest-southeast trending regional normal faults with randomly oriented local normal faults found along the Wind River Range. The faults are generally not considered to be active; however, one Quaternary-age fault, the Leckie Fault, was identified within the southeastern portion of the watershed by the USGS Quaternary Fault and Fold Database (USGS, 2006a) as shown on Figure 5. The Leckie Fault is a northwest-southeast trending normal fault along the western margin of the Wind River uplift (USGS, 2006b).

Section 4 - Surficial Materials

Surficial materials identified by the WGS (Case, Arneson, and Hallberg, 1996; Larsen, LaForge, and Wittke, 2015; Wittke, 2010; and Wittke, Carnes, and Lichtner, 2016) within the New Fork River watershed are shown on Figure 3. An explanation of surficial material units is provided on Figure 4. Surficial materials were generally identified within the basin and valley bottoms, on slopes, and overlying glaciated bedrock in upland areas where bedrock is not present at the ground surface. Surficial materials include:

- Alluvium
- Terrace Deposits
- Alluvial Fan Deposits
- Bench Deposits
- Colluvium
- Slopewash Deposits
- Landslide Deposits
- Eolian Deposits
- Playa Lake Deposits
- Glacial Deposits, including glacial outwash and periglacial deposits

- Residuum
- Grus Deposits

Many areas were mapped as consisting of a mixture of two or more surficial materials. General surficial materials are described below.

Alluvial materials include alluvium, terrace deposits, and alluvial fan deposits. These materials were transported and deposited by streams and rivers. Alluvium is the most recent type of alluvial deposit and consists of clay, silt, sand, or gravel within the active channel or meander belt of streams and rivers. Terrace deposits consist of older alluvial deposits that were located adjacent to streams or rivers at elevations higher than the current floodplain. Alluvial fan deposits are gently sloping deposits made by debris flows and streams where they emerge from a confined drainage onto a level or nearly level plain.

Bench deposits are materials deposited on a raised strip of relatively level rock or earth and are capped with coarse-grained materials, typically gravel. Bench deposits are often classified as dissected, meaning cut by erosion into hills and valleys.

Colluvium, slopewash, and landslide deposits were transported primarily by gravity. Colluvium consists of loose and incoherent deposits, which are usually found on the surface of a slope or at the foot of a cliff and are deposited by rainwash, sheetwash, or slow continuous downslope creep. Slopewash deposits consist of soil and rock material which has been moved down a slope, often with the assistance of flowing water. Landslide deposits consist of relatively intact blocks of bedrock or surficial material that have become destabilized and have traveled downslope.

Eolian deposits are materials transported by wind and include sand, silt, and clay sized particles.

Playa lake deposits are materials deposited by broad, shallow sheets of water which quickly gather and evaporate, leaving shallow mud flats or evaporite deposits.

Glacial materials include glacial deposits, glacial outwash deposits, and periglacial deposits. Glacial deposits are formed through glacial action and consist of till and moraine deposits. Till is material eroded by ice from the underlying bedrock and deposited by the glaciers as moraines along the edges and terminus of the ice and typically consists of gravel to boulder sized rock fragments within a silt and sand matrix.
Glacial outwash deposits consist of alluvium and drift, defined as materials of glacial origin, deposited by meltwater streams beyond active glacier ice. Periglacial deposits consist of deposited material related to conditions near glacial margins, such as patterned ground, ice wedges, and solifluction, defined as the gradual movement of wet material down a slope.

Decompositional deposits include residuum and grus. Residuum is a deposit which remains in place after the decomposition of rocks. Grus is a form of residuum and is the accumulation of angular, coarse-grained fragments resulting from the granular disintegration of crystalline rocks. Grus is generally found in the Wind River Range where Precambrian-age plutonic bedrock is present.

Section 5 - Bedrock

Bedrock identified by the by the USGS and WGS (Love and Christiansen, 1985; Oriel and Platt, 1980; and Scott and Sutherland, 2009) within the New Fork River watershed includes rock formations ranging in age from the Archean Era (4,000 to 2,500 million years old) to the

Eocene Epoch (56 to 33.9 million years old), as shown on Figure 1. An explanation of bedrock units is provided on Figure 2.

Bedrock geology of the watershed differs significantly between the Wind River Range and the Green River Basin. Bedrock of the Wind River Range generally consists of Precambrian-age (greater than 540 million years old) plutonic rocks which are often granitic. Within the basin, bedrock consists of relatively flat lying to shallow dipping Tertiary-age (66 to 2.6 million years old) sedimentary bedrock (shale to conglomerate and limestone) and steeply dipping Paleozoic- and Mesozoic-age (540 to 66 million years old) sedimentary bedrock (shale to conglomerate and limestone, dolomite, and coal beds).

Much of the watershed within the basin is underlain by the generally flat lying Early Tertiary-age (66 to 34 million years old) New Fork Tongue Member of the Wasatch Formation which consists of interbedded mudstone and sandstone with thin limestone beds. In the northern region of the basin, the Tertiary-age Wasatch Formation appears on aerial imagery to be steely dipping adjacent the thrust fault. The steeply dipping Paleozoic- and Mesozoic-age bedrock typically outcrops within close proximity to the regional thrust fault, where it has been folded and faulted.

Section 6 - Geologic Hazards

Based on RJH's review of published information, the primary potential geologic hazards and constraints for development of water storage or groundwater use include:

- Ground Shaking
- Liquefaction
- Landslides
- Karst

The USGS Quaternary Fault and Fold Database (USGS, 2006a) includes one fault located within the watershed, as shown on Figure 5. Quaternary faults included in the database are believed to have been sources of earthquakes with magnitudes greater than 6 during the past 1.6 million years. Additional quaternary faults that could impact the seismic hazard within the watershed are mapped outside of the watershed boundary but do not appear on Figure 5 because they are located outside the area shown on the figure. It is also possible that all Quaternary Faults within the watershed have not been identified on the published mapping.

Two USGS seismic applications were used to estimate the peak ground acceleration (PGA) for the watershed:

- 2008 Interactive Deaggregations application (USGS, 2017a) (2008 Application) references 2008 seismic hazard mapping
- U.S. Seismic Design Maps application (USGS, 2017b) (2014 Application) references 2014 seismic hazard mapping

The 2014 Application is currently in Beta format. A site classification of "firm rock" (National Earthquake Hazards Reduction Program ((NEHRP) class B-C) was used in the 2008 Application because this is the only option available. A site classification of "very dense soil and soft rock" (NEHRP class C) was used in the 2014 Application because this classification is appropriate for the basin region of the watershed and is conservative for the mountainous regions.

Using these applications, PGAs at three locations in the watershed shown on Figure 5 were calculated for events with a return interval of 4,975 years (about 1 percent chance of exceedance in 50 years) and a return interval of 2,475 years (about 2 percent chance of exceedance in 50 years). Calculation of the PGA for an event with a return interval of 4,975 years is not possible with the 2014 Application. The event with a return interval of 2,475 years is considered by the USGS to be the maximum considered earthquake for this region of the country. A summary of the results are provided in Table 1 and more information is provided in Attachment A.

TABLE 1
PEAK GROUND ACCELERATION

Seismic Evaluation Location	Application	Probability of Exceedance	Return Interval (yrs)	PGA (g)	Rock Type
Location 1	2008(1)	1% in 50 years	4975	0.64	B/C
	2008(1)	2% in 50 years	2475	0.47	B/C
	2014(2)	2% in 50 years	2475	0.64	C
Location 2	2008(1)	1% in 50 years	4975	0.43	B/C
	2008(1)	2% in 50 years	2475	0.31	B/C
	2014(2)	2% in 50 years	2475	0.46	C
Location 3	2008(1)	1% in 50 years	4975	0.41	B/C
	2008(1)	2% in 50 years	2475	0.30	B/C
	2014(2)	2% in 50 years	2475	0.44	C

Notes:
1. Ground motion was estimated using the 2008 Interactive Deaggregations application provided by the USGS (USGS, 2017a).
2. Ground motion was estimated using the U.S. Seismic Design Maps (Beta) application provided by the USGS (USGS, 2017b).

Deposits of relatively loose and saturated granular soils may be susceptible to liquefaction. Liquefaction is a soil behavior phenomenon in which a soil mass loses a significant portion of its strength because of high pore-water pressure generated by earthquake ground shaking. Relatively loose and saturated granular soils could be present within the alluvium, alluvial fans, eolian deposits, landslide deposits, and glacial deposits and these materials could have a potential to liquefy.

Multiple landslides are mapped within the New Fork River watershed as shown on Figure 5. The majority of the slides occur on steep slopes where thick glacial deposits are present or where colluvium, grus, and/or glacial deposits mantle plutonic bedrock within the Wind River Range. Landslides have also been identified in the New Fork Tongue Member of the Wasatch Formation and within alluvium near the western margin of the watershed. Seismic ground shaking could increase the potential for landslides to occur.

Karst forms by the dissolution of rock as water flows through and enlarges fractures forming underground drainages, caves, and sinkholes. Rock types most susceptible to karst include limestone, dolomite, gypsum, halite, and other salts. Karstic terrain can pose severe seepage problems and is difficult to fully identify with subsurface investigations. In the New

Fork River watershed, the Fontanelle Tongue Member of the Green River Formation, New Fork Tongue Member of the Wasatch Formation, Tensleep Sandstone, Madison Limestone, and Bighorn Dolomite contain limestone and/or dolomite.

Section 7 - Soils

Soil groups identified by the Natural Resources Conservation Service (NRCS) within the New Fork River watershed are shown on Figure 6. Soil group numbers are defined on Figure 7 and a brief description of each soil group is provided in Attachment B. Soil data was compiled from the Web Soil Survey application (NRCS, 2016). Data from the following soil survey areas were collected:

- Sublette County, Wyoming
- Bridger National Forest Eastern Part, Wyoming

Section 8 - Watershed Hydrology

8.1 Geologic Impacts on Watershed Hydrology

The surficial, bedrock, and structural geology within the New Fork River watershed impacts the groundwater and surface hydrology. Geologic material properties such as porosity and permeability impact groundwater storage and yield. The infiltration rates and slope angles influence the quantity and direction of surface flow. Geologic materials that are resistant to erosion generally result in topographic high elevations. Structural features such as faults can be locations of drainages because of the increased disturbance to geologic materials along the faults. The generally northwest-southeast oriented normal and thrust faults have formed generally northwest-southeast oriented mountains and thus the primary streams flow southwest off the flank of the mountains and the larger streams flow generally northwest or southeast along the base of the mountains. Glaciation has greatly impacted the hydrology within the watershed. The majority of the small and large lakes were formed by natural dams consisting of glacial deposits.

8.2 Principal Aquifers

Aquifers within the Green River Basin are part of the Colorado Plateaus aquifer system and range in age from Cenozoic to Paleozoic (less than 541 million years old) (Whitehead, 1996). Within the New Fork River watershed, three primary water-yielding aquifers are present: Quaternary-age (less than 2.6 million years old) unconsolidated deposit aquifers, Lower Tertiary-age (66 to 34 million years old) bedrock aquifers, and Mesozoic-age (252 to 66 million years old) bedrock aquifers. Paleozoic-age (541 to 252 million years old) aquifers are also present within the watershed but are not extensively used because of their depths.

Groundwater generally moves from aquifer recharge areas in the topographically higher area toward the basin and valley centers with buried aquifers commonly receiving downward leakage from overlying aquifers (Whitehead, 1996). Aquifer discharge within the region is generally contributed to upward leakage to shallow aquifers and major streams (Whitehead, 1996). Where faulting is present, groundwater flow systems can be complex and often do not follow the typical flow patterns common in the majority of the watershed. Bedrock located within faulted zones is generally fractured which can provide secondary permeability within the faulted rocks, specifically within bedrock that has very little inherent or primary permeability (AECOM, 2010). Highly altered and weathered material within a fault may also act as a barrier to groundwater flow.

Quaternary-age, unconsolidated deposit aquifers are comprised of interbedded mixtures of clay, silt, sand, and gravel from alluvial and glacial deposits that fill valleys and the Green River Basin, Figure 8. These deposits are commonly less than 50 feet thick but may exceed 100 feet locally (Clarey, 2010). Unconsolidated deposit aquifers are generally unconfined and connected to local surface water bodies and streams with groundwater levels close to the ground surface. These deposits, along with Lower Tertiary-age bedrock, form the most heavily used group of aquifers within the Green River Basin (AECOM, 2010). Within the unconsolidated deposit aquifers, permeabilities and rates of groundwater flow generally increase with grain size.

Lower Tertiary-age bedrock aquifers are divided into two separate aquifer groups: the Wasatch-Fort Union aquifer and the Laney aquifer, Figure 9. The Laney aquifer is located in the southeast corner of the watershed and consists of bedrock of the Laney Member of the Green River Formation. The aquifer is comprised of fractured sandstone beds of the uppermost portion of the member which yields sufficient water for domestic and livestock-watering purposes (Whitehead, 1996). The Wasatch-Fort Union aquifer begins along the western extent of the Wind River Range and extends westward across the watershed. This aquifer is comprised of bedrock of the Wasatch and Fort-Union Formations with the principal water yielding beds consisting of sandstone that is interbedded with shale, mudstone, and some coal beds (Whitehead, 1996). The aquifer is generally unconfined and commonly exhibits shallow groundwater levels where bedrock outcrops. The aquifer is commonly hydraulically connected with overlying unconsolidated deposit aquifers. The thickness of the Wasatch-Fort Union aquifer is reported to be approximately 11,000 feet near the town of Pinedale (Whitehead, 1996). High artesian pressures are commonly experienced within the aquifer and are often high enough to cause wells to flow.

Mesozoic-age bedrock aquifers are divided into two separate aquifer groups: the Mesaverde aquifer and the Dakota through the Nugget aquifers (Whitehead, 1996). Bedrock of the Mesozoic-age aquifers does not outcrop within the watershed and underlies bedrock of the Lower Tertiary-age aquifers. The Mesaverde aquifer is composed of bedrock of the Late Cretaceous (100 to 66 million years old) Mesaverde Group which consists primarily of sandstone beds, locally confined by shale beds. In most places, the aquifer is hydraulically connected with the overlying Wasatch-Fort Union aquifer. The aquifer is underlain by a thick confining unit composed mostly of shale which hydraulically separates the aquifer from deeper Mesozoic aquifers (Whitehead, 1996). The Dakota through the Nugget aquifers are composed of several sandstone formations separated by confining units and are underlain by a thick confining unit of Triassic and Permian rocks which hydraulically separates the aquifer from deeper Paleozoic aquifers, (Whitehead, 1996).

Paleozoic-age (541 to 252 million years old) aquifers are deeply buried with a top depth of more than 25,000 feet (Whitehead). These aquifers are comprised of sandstone, limestone, and dolomite beds and are not extensively used for water supply.

8.3 Watershed and Aquifer Characteristics

8.3.1 Depth to Initial Groundwater

As shown on Figure 10, depth to initial groundwater varies from zero to about 85 feet below ground surface (bgs), with the majority of the watershed ranging from zero to 30 feet bgs (Wyoming Geographic Information Science Center (WGISC), 1997). Groundwater at or near the land surface was typically identified near major streams and shallow glacial deposits, while groundwater deep below the land surface was identified near the southern extent of the watershed where Lower Tertiary-age bedrock formations are found at the ground surface.

8.3.2 Groundwater Recharge

Groundwater recharge of the aquifers ranges between zero and 39 inches per year, Figure 11, with the highest recharge rates in the mountainous and highland areas (WGISC, 1998). The primary source of recharge is precipitation, with much of the precipitation falling directly on aquifers where they are at or near the land surface in topographically high areas (Whitehead, 1996). Additionally, some recharge occurs by infiltration from streams as they flow across aquifers.

8.3.3 Wells and Springs within the Watershed

Eight springs were identified within the watershed using GIS data digitized from USGS 1:24,000 scale topographic maps by the Wyoming Water Development Office (WWDO, 2010) as shown on Figure 12. Springs were generally identified along the western margin of the Wind River Range within glacial deposits and outcrops of Lower Tertiary-age, Paleozoic-age, and Precambrian-age bedrock. Two springs were identified along the Quaternary-age Leckie Fault within Precambrian-age bedrock.

Information regarding the location and characteristics of wells located within the watershed was obtained from the Wyoming State Engineer's Office (WSEO) and the USGS. One USGS well and 2,136 WSEO wells were identified within the watershed as shown on Figure 12 (WSEO, 2016 and USGS, 2016). The USGS well is located in the southwestern corner of the watershed and was completed within alluvial deposits. WSEO wells had completion dates ranging from December 31, 1867 to April 19, 2016 and are mostly located within populated areas surrounding towns and in valleys. Less than 5 percent of wells permitted by the WSEO are located within mountainous and highland areas. WSEO wells were completed in both unconsolidated deposits and Lower Tertiary-age bedrock aquifers, although a distinction was not made within the provided data. Therefore, well and aquifer characteristics interpolated from the data are representative of the unconsolidated and Lower Tertiary-age aquifers. Inconsistencies between GIS data (WSEO, 2016) and permitted well information (WSEO, 2015) provided by the WSEO were identified, therefore the data may not be reliable.

The depth to static water level in the WSEO and USGS wells varied from zero to 3,300 feet bgs as shown on Figure 12 and represents water levels at different screened intervals within unconsolidated and Lower Tertiary-age aquifers. Therefore, the static water levels within the wells cannot be directly compared to the water levels shown on Figure 10 which displays the initial depth to water below the ground surface. The depth to static groundwater for about 3 percent of the WSEO wells was recorded as unknown, dry, artesian, or flowing. Within the GIS data, these classifications correlate to specific negative values which are defined in Attachment C. Artesian wells are defined by the WSEO as wells which derive water from artesian or confined aquifers where hydrostatic pressures are greater than atmospheric pressures thereby raising the water level above the top of the aquifer (WSEO, 2011). Flowing wells are defined by the WSEO as artesian wells which have a water level above the land surface. Wells set within non-artesian conditions may also exhibit flowing water, for example, a well located within an unconfined aquifer with an upward hydraulic gradient may exhibit flowing conditions. Therefore to be conservative, the "flowing" classification given by the WSEO is assumed to incorporate both artesian and non-artesian flowing conditions. The static water level in the WSEO and USGS wells generally ranged from zero to 250 feet bgs near towns and within major stream valleys. Deeper water levels, 250 to 3,300 feet bgs, were generally identified in the south western portion of the watershed, southwest of the towns of Pinedale and Boulder.

Well depths were obtained from the WSEO and the USGS (WSEO, 2016 and USGS, 2016) and ranged up to 5,200 feet bgs with depths typically less than 250 feet near towns and between 250 and 1,000 feet in the southwestern portion of the watershed as shown on Figure 13. Well depths for about 23 percent of the WSEO wells were recorded as either zero or -1, and were assumed to indicate unknown data, as defined in Attachment C. . Seventeen wells in the western to southwestern portion of the watershed had depths between 1,000 and 5,200 feet.

Well yields were obtained from the WSEO (WSEO, 2016) and ranged up to 1,261 gallons per minute (gpm), with yields generally less than 50 gpm near towns and between 50 and 250 gpm in the southwestern portion of the watershed as shown on Figure 14. Well yields for about 0.1 percent of the WSEO wells were recorded as -1, and were assumed to indicate unknown data, as defined in Attachment C. Seven wells exhibited yields greater than 250 gpm and were generally located in the southern portion of the watershed.

Depths to the principal water bearing formation were obtained from the WSEO (WSEO, 2016) and ranged up to 1,170 feet bgs as shown on Figure 15. Depths to the principal water bearing formation for about 15 percent of the WSEO wells were recorded as unknown or dry. These classifications correlate to specific negative values which are defined in Attachment C. Depths to the principal water bearing formations were generally less than 250 feet near towns and between 250 and 1,170 feet within the southwestern portion of the watershed.

Saturated thicknesses of the principal water bearing formations were calculated using top and bottom depths for these formations (WSEO, 2016) as shown on Figure 16. Top and/or bottom depths to the principal water bearing formations were not provided for about 41 percent of the WSEO wells, therefore thicknesses were not calculated. Saturated thicknesses ranged from 1 to 2,300 feet, with thicknesses generally less than 130 feet near towns and between 130 and 600 feet within the southwestern portion of the watershed. Two wells with saturated thicknesses of about 2,300 feet were identified in the southern portion of the watershed. Based on the depths to the principal water bearing formations on Figure 15 and well locations, saturated thicknesses greater than about 130 to 300 feet likely occur in the Lower Tertiary-age bedrock aquifers.

8.4 Groundwater Usage

Groundwater usage information was included with the well data obtained from the WSEO (WSEO, 2016), Figure 17. Wells were permitted for the following uses with many permitted for multiple uses:

- Domestic
- Industrial
- Irrigation
- Miscellaneous
- Stock Watering
- Groundwater Monitoring
- Test Wells

The majority of the wells are used for domestic, stock watering, monitoring, and miscellaneous purposes. Near towns, groundwater is generally used for domestic and stock watering purposes while in the southern portion of the watershed groundwater is primarily

used for miscellaneous and stock watering purposes. Figure 17 includes the number of wells permitted for each use or group of uses.

Section 9 - References

AECOM, ERO Resources Corp., and WWC Engineering (2010) *Green River Basin Plan*, Wyoming Water Development Commission Basin Planning Program

Hunt, C.B. (1967) *Physiography of the United States*. W.H. Freeman and Company, 480 pp.

Case, J.C, Arneson, C.S., and Hallberg, L.L. (1996) *Preliminary 1:500,000-scale digital surficial geology map of Wyoming*, Wyoming State Geological Survey Geologic Hazards Section Digital Map 98-1, scale 1:500,000

Clarey, K.E., Bartos, T., Copeland, D., Hallberg, L.L., Clark, M.L., and Thompson, M.L. (2010) *Available Groundwater Determination Technical Memorandum for the Greater Green River Basin Water Plan II Level I Study*, Wyoming Water Development Commission

Larsen, M.C., LaForge, J.S., and Wittke, S.J. (2015) *Surficial Geologic Map of the Afton 30' x 60' Quadrangle, Sublette and Lincoln Counties, Wyoming*, Wyoming State Geological Survey Open File Report 15-9, scale 1:100,000

Love, J.D. and Christianson, A.C. (1985) *Geologic Map of Wyoming*, US Geological Survey, scale 1:500,000

Natural Resources Conservation Service (NRCS) (2016) *Web Soil Survey.* U.S. Department of Agriculture. Accessed 2-25-2016 from NRCS website http://websoilsurvey.nrcs.usda.gov/

Oriel, S.S. and Platt, L.B. (1980) *Geologic Map of the Preston 1° x 2° Quadrangle, Southeastern Idaho and Western Wyoming*, US Geological Survey Miscellaneous Investigations Series Map I-1127, scale 1:250,000

Scott, J.E. and Sutherland, W.M. (2009) *Preliminary Geologic Map of the Pinedale 30' x 60' Quadrangle, Sublette and Fremont Counties, Wyoming*, Wyoming State Geological Survey Open File Report 09-5, 1 sheet, scale 1:100,000

US Geological Survey (USGS) (2017a) *2008 Interactive Deaggregations*, accessed 1-05-2017 from USGS web site https://geohazards.usgs.gov/deaggint/2008/

US Geological Survey (USGS) (2017b) *U.S. Seismic Design Maps (Beta)*, accessed 1-05-2017 from USGS web site http://earthquake.usgs.gov/designmaps/beta/us/

US Geological Survey (USGS) (2016) *USGS 423401109555101 30-110-22aad01 streambank well at station 09205000*, accessed 12-19-2016 from the USGS National Water Information System web site https://waterdata.usgs.gov/nwis/inventory/?site_no=423401109555101&agency_cd=USGS

US Geological Survey (USGS) (2006a) *Quaternary Fault and Fold Database for the United States*, accessed 12-08-2016 from USGS web site http//earthquakes.usgs.gov/regional/qfaults/

US Geological Survey (USGS) (2006b) *Quaternary Fault and Fold Database for the United States – Leckie Fault*, accessed 12-08-2016 from USGS web site https://geohazards.usgs.gov/cfusion/qfault/show_report_AB.cfm?fault_id=775&section_id

Whitehead, R.L. (1996) *Groundwater Atlas of the United States*, U.S. Geological Survey Hydrologic Investigations Atlas 730-I

Wittke, S.J. (2010) *Surficial Geologic Map of the Pinedale 30' x 60' Quadrangle, Sublette and Fremont Counties, Wyoming*, Wyoming State Geological Survey Map Series 100, scale 1:100,000

Wittke, S.J., Carnes, J.D., and Lichtner D.T. (2016) *Preliminary Surficial Geologic Map of the Jackson 30' x 60' Quadrangle, Sublette, Teton, Lincoln, and Fremont Counties, Wyoming*, Wyoming State Geological Survey Open File Report 16-6, scale 1:100,000

Wyoming Geographic Information Science Center (WGISC) (1998) *Draft Estimated Net Annual Aquifer Recharge for Wyoming at 1:100,000*, accessed 12-19-2016 from the Wyoming Geospatial Hub web site http://explorer.geospatialhub.org/geoportal/catalog/search/resource/details.page?uuid=%7B1C8D9C58-945C-4ADB-B8EB-0EBAA9DDB4E6%7D

Wyoming Geographic Information Science Center (WGISC) (1997) *Depth to Initial Ground Water in Feet for Wyoming at 1:100,000*, accessed 12-19-2016 from the Wyoming Geospatial Hub web site http://explorer.geospatialhub.org/geoportal/catalog/search/resource/details.page?uuid=%7B05FAAD38-8AD4-4B3B-9E02F7171FE28%7D

Wyoming State Engineer's Office (WSEO) (2016) *Maps and Spatial Data*, accessed 12-15-2016 from the WSEO web site https://sites.google.com/a/wyo.gov/seo/documents-data/maps-and-spatial-data

Wyoming State Engineer's Office (WSEO) (2015) *e-Permit*, accessed 12-15-2016 from the WSEP web site http://seoweb.wyo.gov/e-Permit/Common/Login.aspx

Wyoming State Engineer's Office (WSEO) (2011) *Wyoming State Board of Control Regulations and Instructions Part III - Water Well Minimum Construction Standards*

Wyoming Water Development Office (WWDO) (2010) *2010 Green River Basin Plan GIS Products*, accessed 12-21-2016 from WWDO web site http://waterplan.state.wy.us/plan/green/2010/gis/gis.html

ATTACHMENTS:

Attachment A	Seismic Data
Attachment B	NRCS Soil Groups
Attachment C	WSEO Well GIS Data Negative Value Explanation

FIGURES

Figure 1	Exposed Geology
Figure 2	Exposed Geology Explanation
Figure 3	Surficial Geology
Figure 4	Surficial Geology Explanation
Figure 5	Geologic Hazards
Figure 6	NRCS Soils Data
Figure 7	NRCS Soils Data Explanation
Figure 8	Unconsolidated Deposit Aquifers
Figure 9	Principal Bedrock Aquifers
Figure 10	Depth to Initial Groundwater
Figure 11	Surficial Aquifers Net Annual Recharge
Figure 12	Depth to Static Water Level
Figure 13	Depth of Wells
Figure 14	Well Yield

Figure 15 Depth to Principal Water Bearing Formation
Figure 16 Saturated Aquifer Thickness
Figure 17 Groundwater Usage

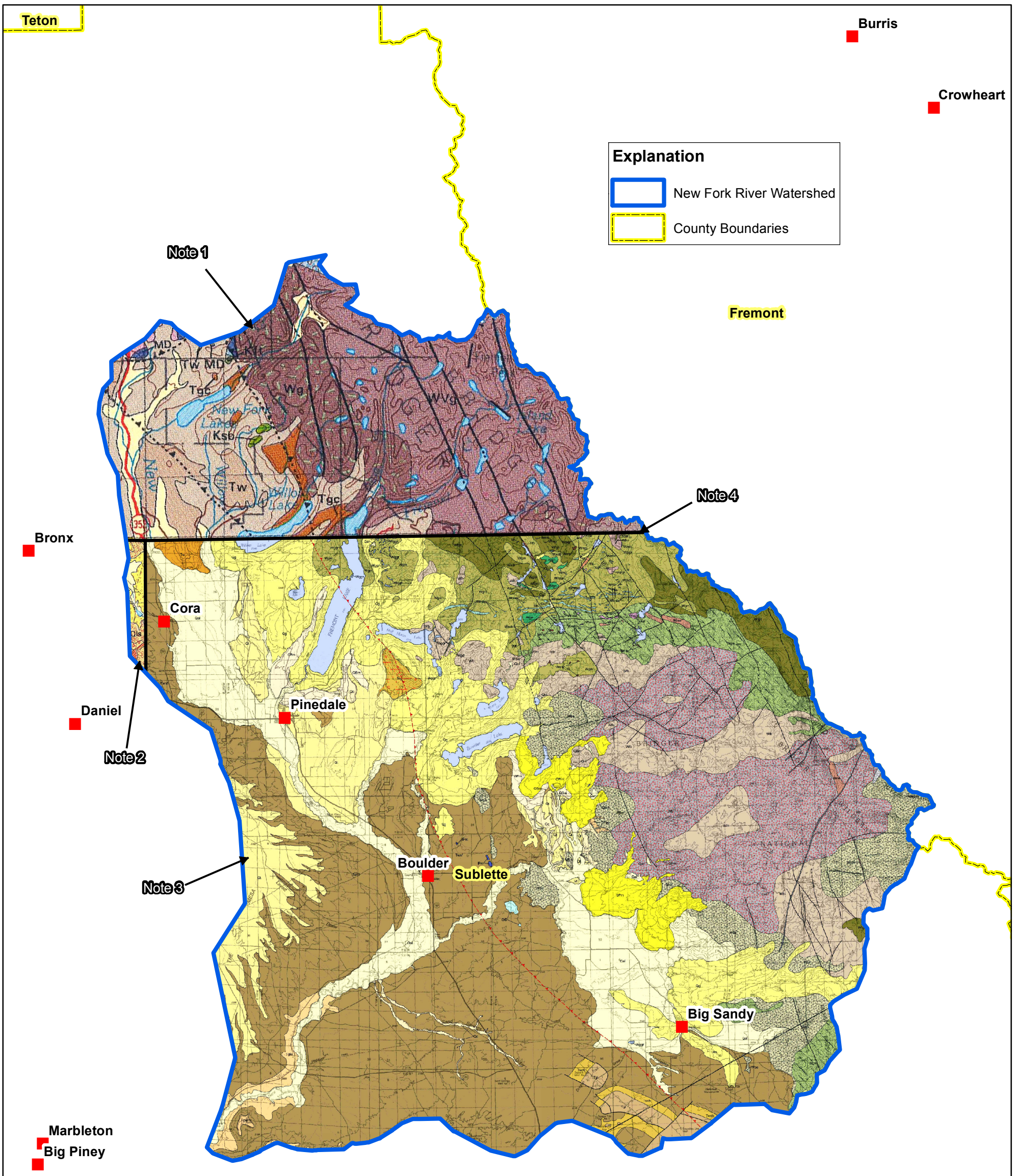

Notes:
1. Geology data was sourced from Love and Christiansen (1985).
2. Geology data was sourced from Oriel and Platt (1980).
3. Geology data was sourced from Scott and Sutherland (2009).
4. Geologic map area boundaries are represented by heavy black lines.

N

0 2.5 5 10 Miles

THIS DOCUMENT MUST BE REPRODUCED IN COLOR

Projection: NAD 83 - UTM 12N

RJH CONSULTANTS, INC.

NEW FORK RIVER LEVEL 1 WATERSHED STUDY

EXPOSED GEOLOGY

PROJECT NUMBER 16123

February 2017

Figure 1

P:\16123 - New Fork Level 1\Engineering\1003C_geology\GIS\Figures\Figure 1_Exposed Geology Map - NAD 83 UTM 12.mxd

Explanation

Map Symbol			Description	Age
Love and Christiansen (1985)	Oriel and Platt (1980)	Scott and Sutherland (2009)		
Qa			Alluvium and Colluvium	Holocene and Pleistocene
	Qal	Qal	Alluvium	Holocene and Pleistocene
		Qt	Terrace deposits	Holocene and Pleistocene
	Qtg		Terrace gravels	Holocene and Pleistocene
	Qls		Landslide deposits	Holocene and Pleistocene
	Qd	Qc	Colluvium	Holocene and Pleistocene
Qg			Glacial deposits	Holocene and Pleistocene
		Qg	Glacial debris	Pleistocene
		QPm	Pinedale morainal deposits	Pleistocene
		QBm	Bull Lake morainal deposits	Pleistocene
		QSm	Sacagawea Ridge morainal deposits	Pleistocene
		Tfb	Fault Breccia	Tertiary
		Tfm	Mylonite	Tertiary
		Tug	Undifferentiated gravels	Tertiary
		Tcg	Undifferentiated conglomerate beds	Lower Eocene
		Tgl	Laney Shale Member of the Green River Formation	Lower Eocene
		Tgw	Wilkins Peak Member of the Green River Formation	Lower Eocene
		Tgfo	Fontenelle Tongue of the Green River Formation	Lower Eocene
Tgc			Granitic conglomerate above or in upper part of Wasatch Formation	Eocene

RJH CONSULTANTS, INC.

NEW FORK RIVER LEVEL 1 WATERSHED STUDY

EXPOSED GEOLOGY EXPLANATION

PROJECT NUMBER 16123

February 2017 **Figure 2-P.1**

P:\16123 – NEW FORK LEVEL 1\ENGINEERING\1003C_GEOLOGY\MEMO\MEMORANDUM\FIGURES\CAD\FIGURE 2_EXPOSED GEOLOGY EXPLANATION.DWG 2/9/2017 2:12 PM

Explanation

Map Symbol			Description	Age
Love and Christiansen (1985)	Oriel and Platt (1980)	Scott and Sutherland (2009)		
Tw		Tw	Wasatch Formation	Eocene
		Twcb	Cathedral Bluffs Tongue of the Wasatch Formation	Lower Eocene
	Twn	Twnf	New Fork Tongue of the Wasatch Formation	Lower Eocene
Ksb			Bacon Ridge Sandstone	Uppper Cretaceous
Kft			Frontier Formation	Uppper Cretaceous
		IPm	Tensleep Sandstone	Lower Permian and Upper and Middle Pennsylvanian
MD			Madison Limestone	Upper and Lower Mississippian
O€		O€	Bighorn Dolomite	Upper and Middle Ordovician
		Xd	Diabase dikes	Precambrian
		Xfp	Feldspathic peridotite	Precambrian
		Wpgr	Porphyritic granite	Precambrian
		Wggr	Gray granite	Precambrian
		Wbe	Bears Ears pluton	Precambrian
		Wtl	Transition zone between Bears Ears pluton and Louis Lake batholith	Precambrian
		Wlb	Louis Lake Batholith	Precambrian
		Wfgn	Felsic orthogneiss	Precambrian
		Wgm	Gray migmatitic gneiss	Precambrian
		Wms	Metasediments	Precambrian
		Wgs	Gneissic supracrustal rocks	Precambrian

RJH CONSULTANTS, INC.

NEW FORK RIVER LEVEL 1 WATERSHED STUDY

EXPOSED GEOLOGY EXPLANATION

PROJECT NUMBER 16123

February 2017 **Figure 2-P.2**

P:\16123 - NEW FORK LEVEL 1\ENGINEERING\1003C_GEOLOGY\MEMO\MEMORANDUM\FIGURES\CAD\FIGURE 2_EXPOSED GEOLOGY EXPLANATION.DWG 2/9/2017 2:12 PM

Explanation

Map Symbol			Description	Age
Love and Christiansen (1985)	Oriel and Platt (1980)	Scott and Sutherland (2009)		
		Wmp	Mafic pods	Precambrian
		Wmc	Coarse-grained amphibolite	Precambrian
		Wmu	Ultramafic pods	Precambrian
		Wmla	Laminated amphibolite	Precambrian
		Wmlb	Laminated amphibolite Breccia	Precambrian
Wg			Granitic rocks of 2,600-Ma age group	Late Archean
WVg			Plutonic rocks	Middle Archean
Ugn			Oldest gneiss complex	Early Archean

Map Symbol			Description
Love and Christiansen (1985)	Oriel and Platt (1980)	Scott and Sutherland (2009)	
			Contact
			Fault - dotted where concealed, bar and ball on downthrown side
			Thrust Fault - dotted where concealed, sawteeth on upper plate

RJH CONSULTANTS, INC.

NEW FORK RIVER LEVEL 1 WATERSHED STUDY

EXPOSED GEOLOGY EXPLANATION

PROJECT NUMBER 16123

February 2017 **Figure 2-P.3**

P:\16123 – NEW FORK LEVEL 1\ENGINEERING\1003C_GEOLOGY\MEMO\MEMORANDUM\FIGURES\CAD\FIGURE 2_EXPOSED GEOLOGY EXPLANATION.DWG 2/9/2017 2:12 PM

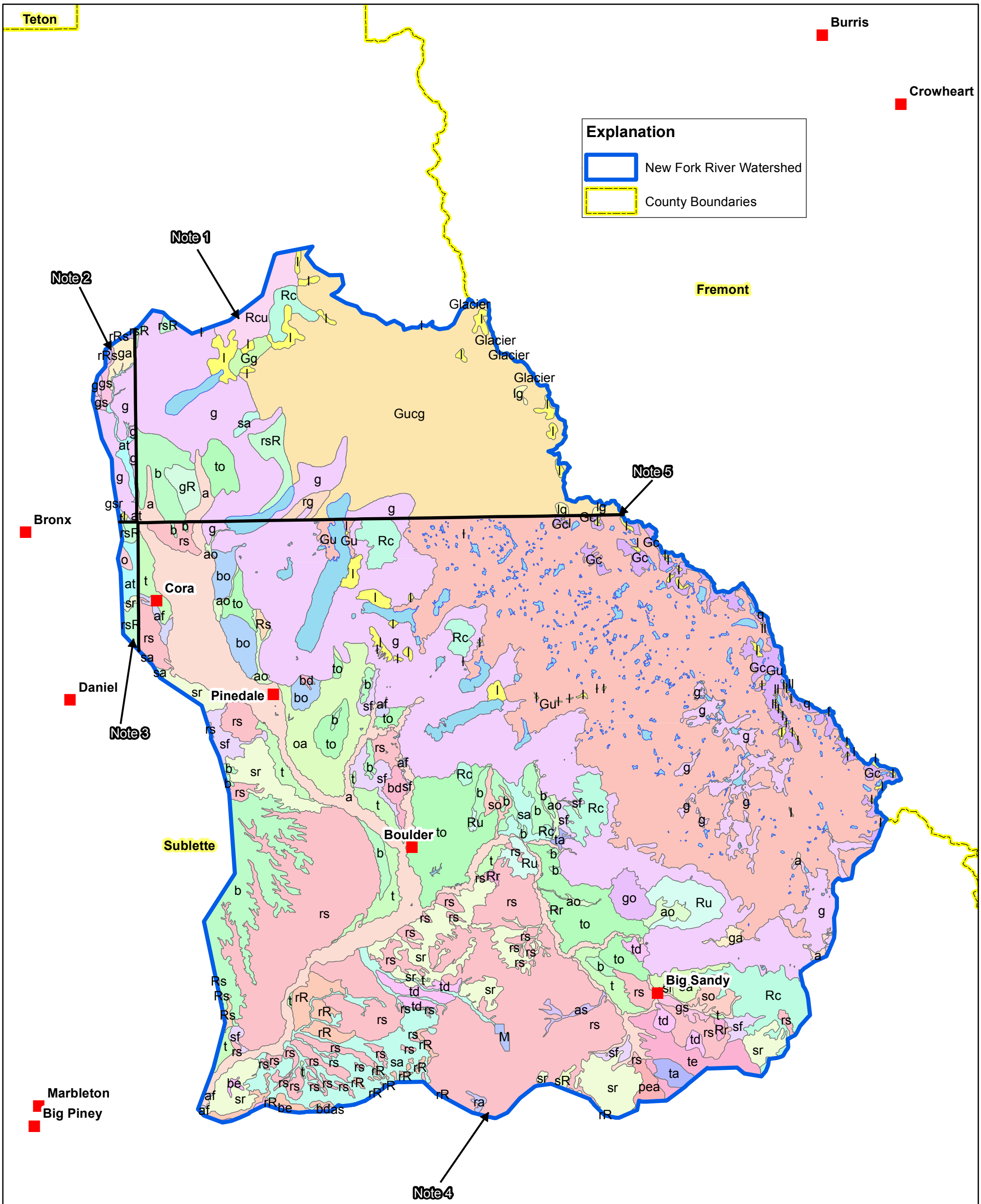

Notes:
1. Surficial geology data sourced from Case, Arneson, and Hallberg (1996).
2. Surficial geology data sourced from Wittke, Carnes, and Lichtner (2016).
3. Surficial geology data sourced from Larsen, LaForge, and Wittke (2015).
4. Surficial geology data sourced from Wittke (2010).
5. Surficial geology map area boundaries are represented by heavy black lines.

N

0 2.5 5 10 Miles

THIS DOCUMENT MUST BE REPRODUCED IN COLOR

Projection: NAD 83 - UTM 12N

RJH CONSULTANTS, INC.

NEW FORK LAKE LEVEL 1 WATERSHED STUDY

SURFICIAL GEOLOGY

PROJECT NUMBER 16123

February 2017

Figure 3

P:\16123 - New Fork Level 1\Engineering\1003C_geology\GIS\Figures\Figure 3_Surficial Geology Map - NAD 83 UTM 12.mxd

Explanation

- Gc - Glaciated Bedrock and Colluvium
- Gg - Glaciated Bedrock and Glacial Deposits
- Glacier
- Gu - Glaciated Bedrock and Grus
- Gucg - Glaciated Bedrock and Grus with minor components of Colluvium and Glacial Deposits
- M - Large Open Pit Mine/Quarry
- Rc - Bedrock and Colluvium
- Rcu - Bedrock and Colluvium with minor components of Grus
- Rr - Bedrock and Residuum
- Rs - Bedrock and Slopewash Deposits
- Ru - Bedrock and Grus
- W - Body of Water
- a - Alluvium
- af - Alluvium and Alluvial Fan Deposits
- ao - Alluvium and Glacial Outwash Deposits
- as - Alluvium and Slopewash Deposits
- at - Alluvium and Terrace Deposits
- b - Bench Deposits
- bd - Bench and Dissected Deposits
- be - Bench and Eolian Deposits
- bo - Bench and Glacial Outwash Deposits
- g - Glacial Deposits
- gR - Glacial Deposits and Bedrock
- ga - Glacial Deposits and Alluvium
- go - Glacial and Glacial Outwash Deposits
- gs - Glacial and Slopewash Deposits
- gsr - Glacial and Slopewash Deposits with minor components of Residuum
- l - Landslide Deposits
- lg - Landslide and Glacial Deposits
- o - Glacial Outwash Deposits
- oa - Glacial Outwash Deposits and Alluvium
- pea - Playa Lake and Eolian Deposits with minor components of Alluvium
- q - Periglacial Deposits
- rR - Residuum and Bedrock
- rRs - Residuum and Bedrock with minor components of Slopewash Deposits
- ra - Residuum and Alluvium
- rg - Residuum and Glacial Deposits
- rs - Residuum and Slopewash Deposits
- rsR - Residuum and Slopewash Deposits with minor components of Bedrock
- sR - Slopewash Deposits and Bedrock
- sa - Slopewash Deposits and Alluvium
- sf - Slopewash and Alluvial Fan Deposits
- so - Slopewash and Glacial Outwash Deposits
- sr - Slopewash Deposits and Residuum
- t - Terrace Deposits
- ta - Terrace Deposits and Alluvium
- td - Terrace and Dissected Deposits
- te - Terrace and Eolian Deposits
- to - Terrace and Glacial Outwash Deposits

THIS DOCUMENT MUST BE REPRODUCED IN COLOR

Note:
1. See Figuer 2.1 for sources of surfical materials data.

RJH CONSULTANTS, INC.

NEW FORK RIVER LEVEL 1 WATERSHED STUDY	SURFICIAL GEOLOGY EXPLANATION
PROJECT NUMBER 16123	February 2017 **Figure 4**

P:\16123 - New Fork Level 1\Engineering\1003C_geology\GIS\Figures\Figure 4_Surficial Geology Map Explanation.mxd

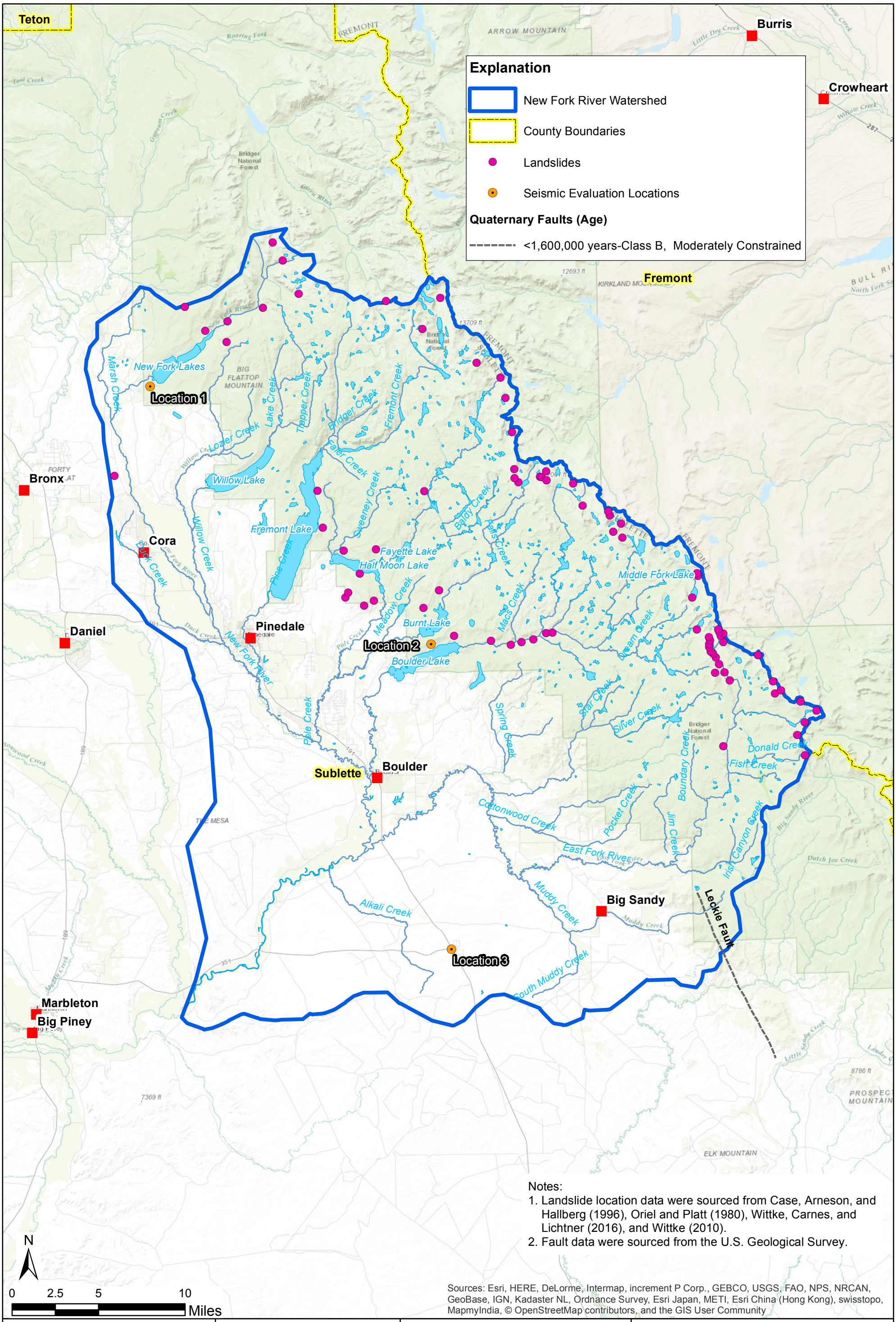

P:\16123 - New Fork Level 1\Engineering\1003C_geology\GIS\Figures\Figure 5_Landslide and Fault Map - NAD 83 UTM 12.mxd

THIS DOCUMENT MUST BE REPRODUCED IN COLOR

Projection: NAD 83 - UTM 12N

RJH CONSULTANTS, INC.

NEW FORK RIVER LEVEL 1 WATERSHED STUDY

GEOLOGIC HAZARDS

PROJECT NUMBER 16123

February 2017

Figure 5

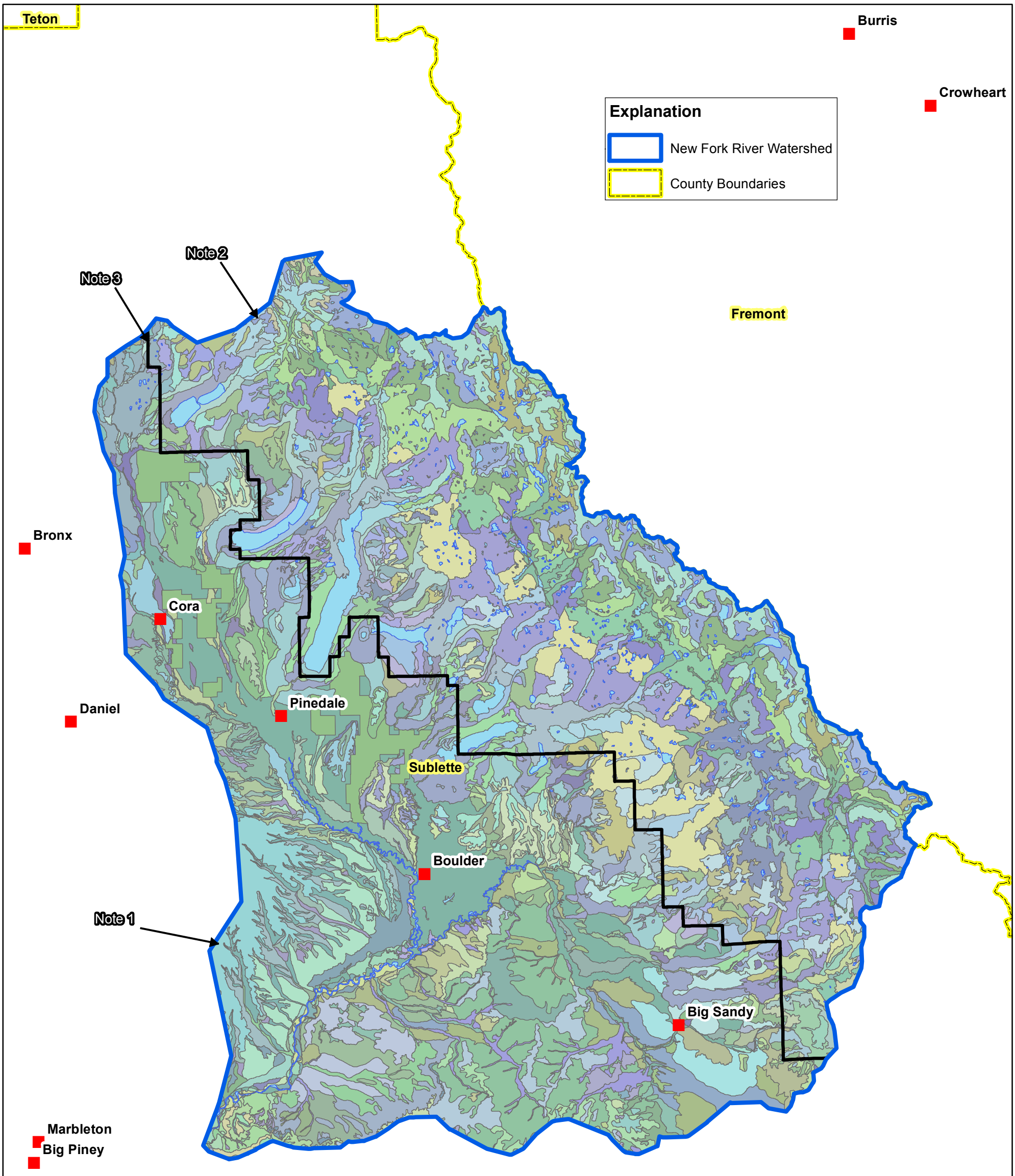

N

0 2.5 5 10 Miles

Notes:
1. Soils data was obtained from Sublette County Area, Wyoming soil survey area.
2. Soils data was obtained from Bridger National Forest Eastern Part, Wyoming soil survey area.
4. Soil survey area boundaries are represented by heavy black lines.

THIS DOCUMENT MUST BE REPRODUCED IN COLOR

Projection: NAD 83 - UTM 12N

RJH CONSULTANTS, INC.

NEW FORK RIVER LEVEL 1 WATERSHED STUDY

NRCS SOILS DATA

PROJECT NUMBER 16123

February 2017

Figure 6

P:\16123 - New Fork Level 1\Engineering\1003C_geology\GIS\Figures\Figure 6_NRCS Soils Map - NAD 83 UTM 12.mxd

Explanation

1101	2101	2205	2227	2442	3303	3701	4644	5418	5607	6322	7341	7641	DA
1104	2106	2211	2228	2443	3401	4111	4645	5419	5608	6331	7342	7642	NOTCOM
1105	2107	2213	2236	2461	3402	4201	4702	5426	5609	6332	7343	7645	W
1109	2112	2214	2240	2511	3403	4341	5203	5437	5612	6333	7501	7701	
1112	2113	2215	2305	2601	3404	4342	5303	5501	5622	6334	7502	8002	
1114	2114	2216	2310	2602	3405	4343	5313	5507	5701	6341	7503	8003	
1115	2115	2217	2315	2641	3406	4511	5325	5518	5702	6342	7511	8004	
1204	2116	2218	2344	2642	3501	4602	5326	5519	5703	6621	7601	9108	
1205	2117	2219	2345	2861	3502	4621	5337	5520	5703BE	6631	7602	9110	
1206	2121	2222	2346	3201	3601	4631	5402	5528	5704	7111	7602SU	9207	
1209	2122	2223	2351	3202	3603	4641	5405	5601	5741	7112	7603	9308	
1701	2202	2224	2401	3203	3604	4642	5409	5602	6111	7251	7620	9504	
1801	2203	2226	2441	3205	3605	4643	5417	5606	6321	7331	7632	9702	

THIS DOCUMENT MUST BE REPRODUCED IN COLOR

Notes:
1. Soils data were obtained from the Natural Resources Conservation Service. See Figure 6 for specific soil survey areas.
2. Soil group names are provided in Attachment B.

RJH CONSULTANTS, INC.

NEW FORK RIVER LEVEL 1 WATERSHED STUDY

NRCS SOILS DATA EXPLANATION

PROJECT NUMBER 16123

February 2017

Figure 7

P:\16123 - New Fork Level 1\Engineering\1003C_geology\GIS\Figures\Figure 7_NRCS Soils Map Explanation.mxd

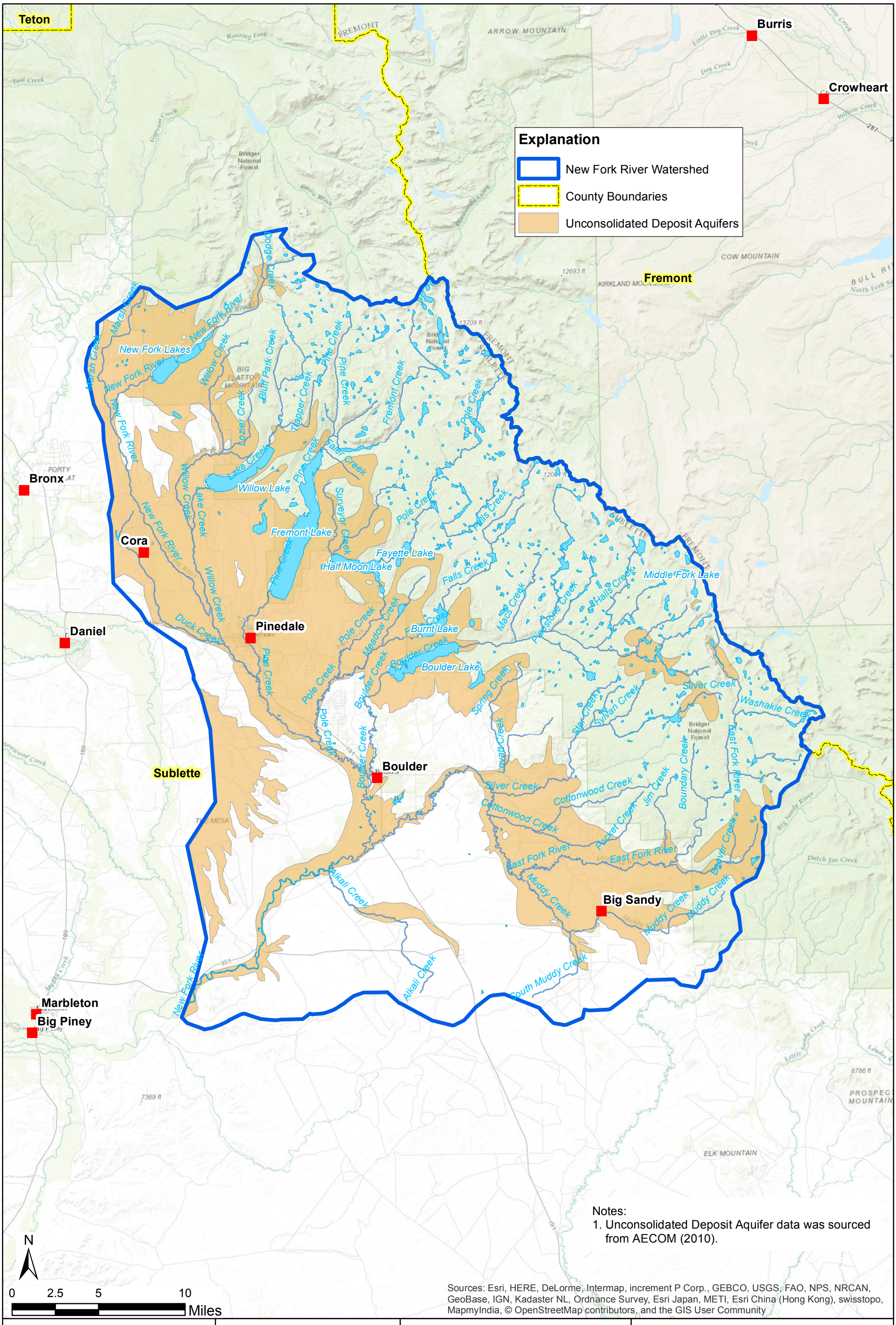

Notes:
1. Unconsolidated Deposit Aquifer data was sourced from AECOM (2010).

Sources: Esri, HERE, DeLorme, Intermap, increment P Corp., GEBCO, USGS, FAO, NPS, NRCAN, GeoBase, IGN, Kadaster NL, Ordnance Survey, Esri Japan, METI, Esri China (Hong Kong), swisstopo, MapmyIndia, © OpenStreetMap contributors, and the GIS User Community

P:\16123 - New Fork Level 1\Engineering\1003C_geology\GIS\Figures\Watershed Hydrology\Figure 8_Unconsol.DepositAquifers - NAD 83 UTM 12.mxd

THIS DOCUMENT MUST BE REPRODUCED IN COLOR

Projection: NAD 83 - UTM 12N

RJH CONSULTANTS, INC.

NEW FORK RIVER LEVEL 1 WATERSHED STUDY

UNCONSOLIDATED DEPOSIT AQUIFERS

PROJECT NUMBER 16123

February 2017

Figure 8

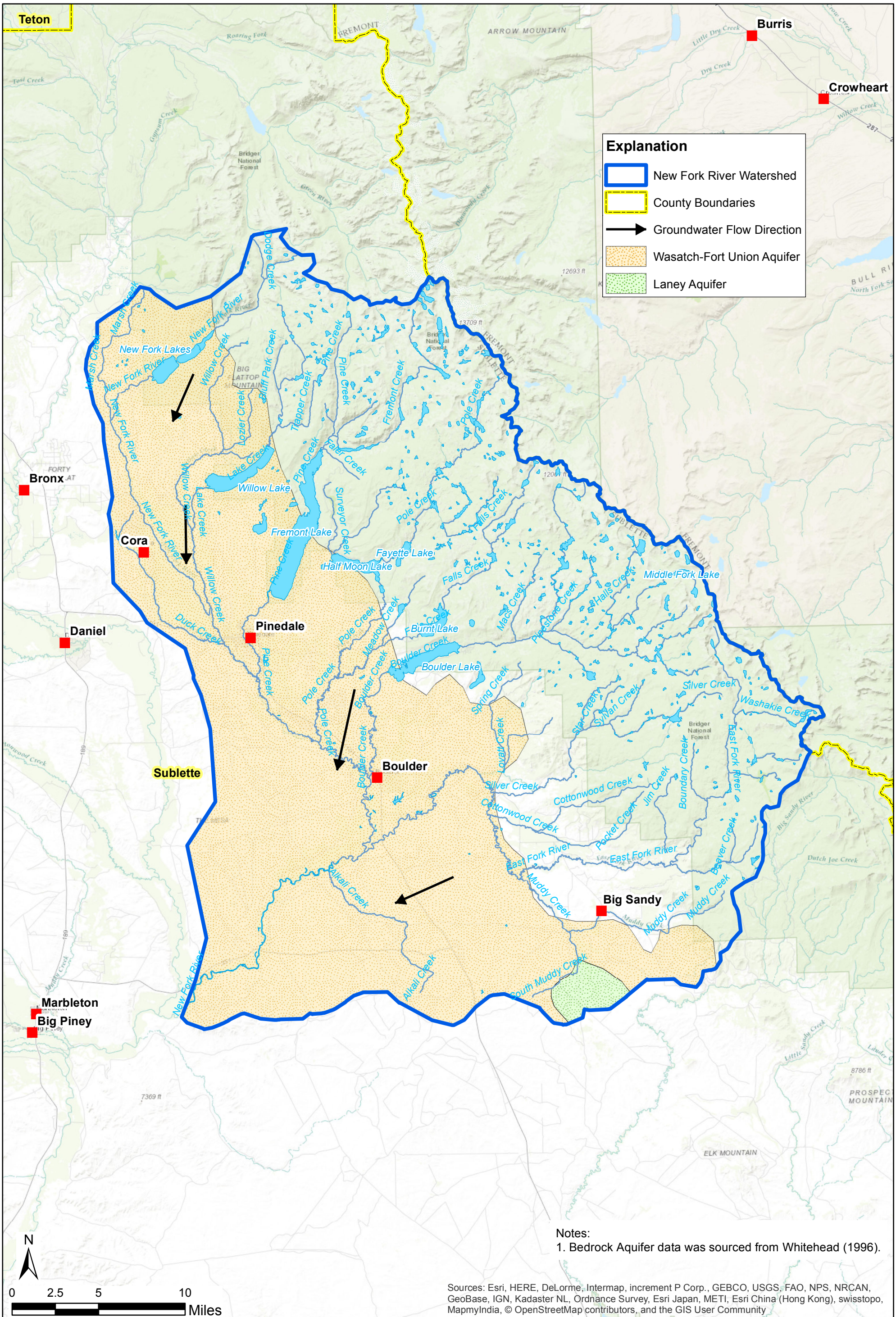

Notes:
1. Bedrock Aquifer data was sourced from Whitehead (1996).

Sources: Esri, HERE, DeLorme, Intermap, increment P Corp., GEBCO, USGS, FAO, NPS, NRCAN, GeoBase, IGN, Kadaster NL, Ordnance Survey, Esri Japan, METI, Esri China (Hong Kong), swisstopo, MapmyIndia, © OpenStreetMap contributors, and the GIS User Community

THIS DOCUMENT MUST BE REPRODUCED IN COLOR

Projection: NAD 83 - UTM 12N

RJH CONSULTANTS, INC.

NEW FORK RIVER LEVEL 1 WATERSHED STUDY

PRINCIPAL BEDROCK AQUIFERS

PROJECT NUMBER 16123

February 2017

Figure 9

P:\16123 - New Fork Level 1\Engineering\1003C_geology\GIS\Figures\Watershed Hydrology\Figure 9_BedrockAquifers - NAD 83 UTM 12.mxd

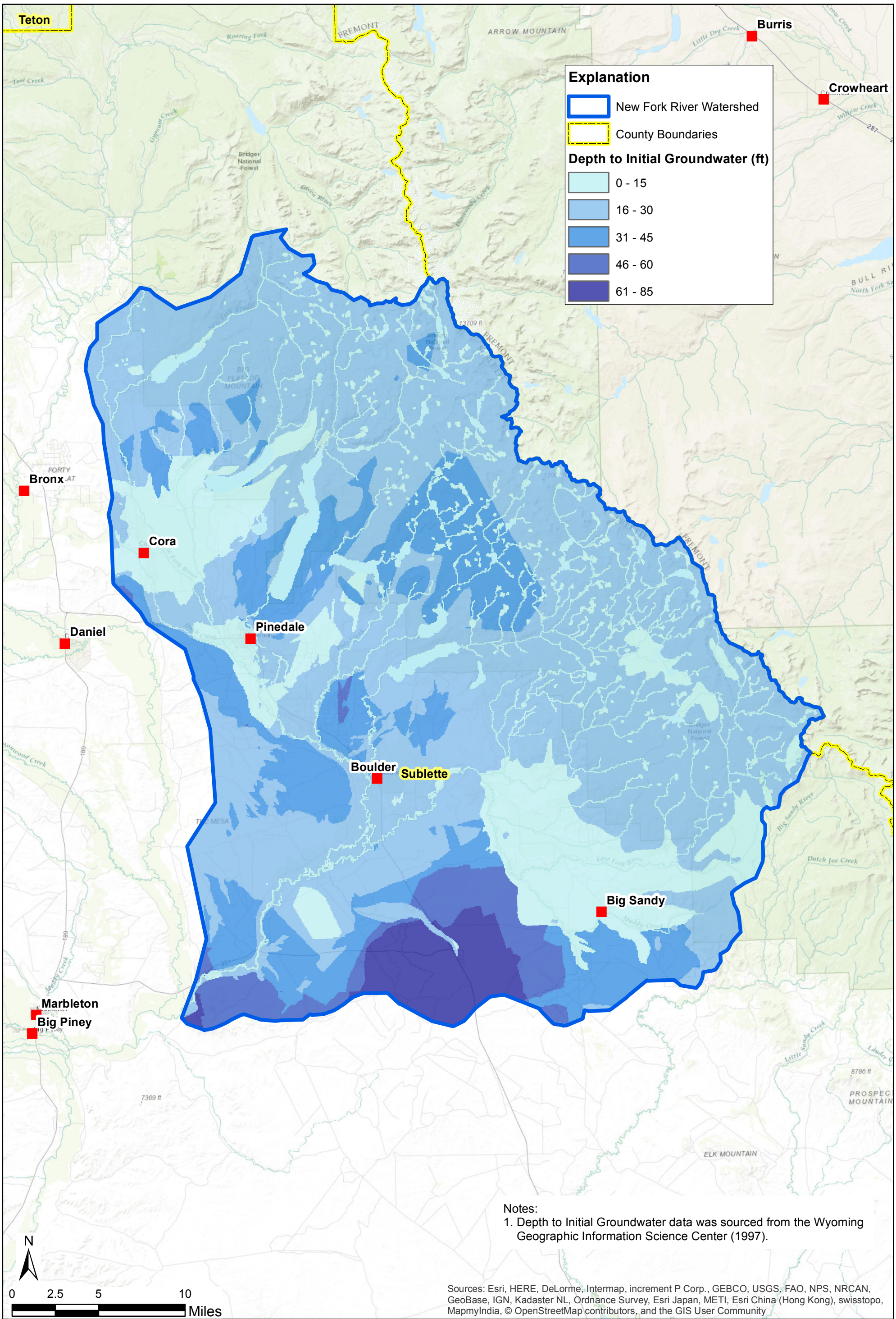

Notes:
1. Depth to Initial Groundwater data was sourced from the Wyoming Geographic Information Science Center (1997).

Sources: Esri, HERE, DeLorme, Intermap, increment P Corp., GEBCO, USGS, FAO, NPS, NRCAN, GeoBase, IGN, Kadaster NL, Ordnance Survey, Esri Japan, METI, Esri China (Hong Kong), swisstopo, MapmyIndia, © OpenStreetMap contributors, and the GIS User Community

P:\16123 - New Fork Level 1\Engineering\1003C_geology\GIS\Figures\Watershed Hydrology\Figure 10_Depth to Initial GW - NAD 83 UTM 12.mxd

THIS DOCUMENT MUST BE REPRODUCED IN COLOR

Projection: NAD 83 - UTM 12N

RJH CONSULTANTS, INC.

NEW FORK RIVER LEVEL 1 WATERSHED STUDY

DEPTH TO INITIAL GROUNDWATER

PROJECT NUMBER 16123

February 2017

Figure 10

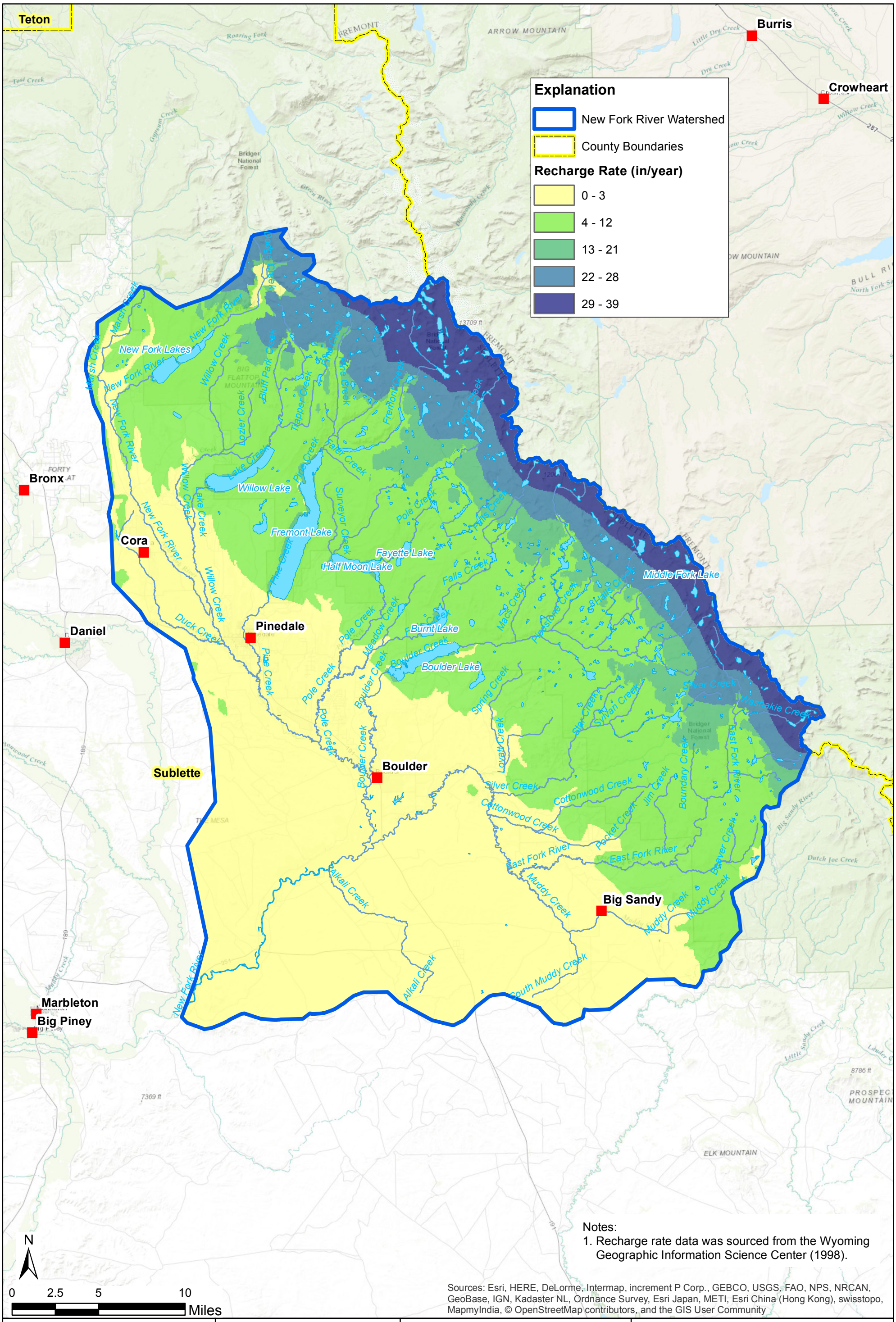

Notes:
1. Recharge rate data was sourced from the Wyoming Geographic Information Science Center (1998).

Sources: Esri, HERE, DeLorme, Intermap, increment P Corp., GEBCO, USGS, FAO, NPS, NRCAN, GeoBase, IGN, Kadaster NL, Ordnance Survey, Esri Japan, METI, Esri China (Hong Kong), swisstopo, MapmyIndia, © OpenStreetMap contributors, and the GIS User Community

P:\16123 - New Fork Level 1\Engineering\1003C_geology\GIS\Figures\Watershed Hydrology\Figure 11_Recharge Rates - NAD 83 UTM 12.mxd

THIS DOCUMENT MUST BE REPRODUCED IN COLOR

Projection: NAD 83 - UTM 12N

RJH CONSULTANTS, INC.

NEW FORK RIVER LEVEL 1 WATERSHED STUDY

SURFICIAL AQUIFERS NET ANNUAL RECHARGE

PROJECT NUMBER 16123

February 2017

Figure 11

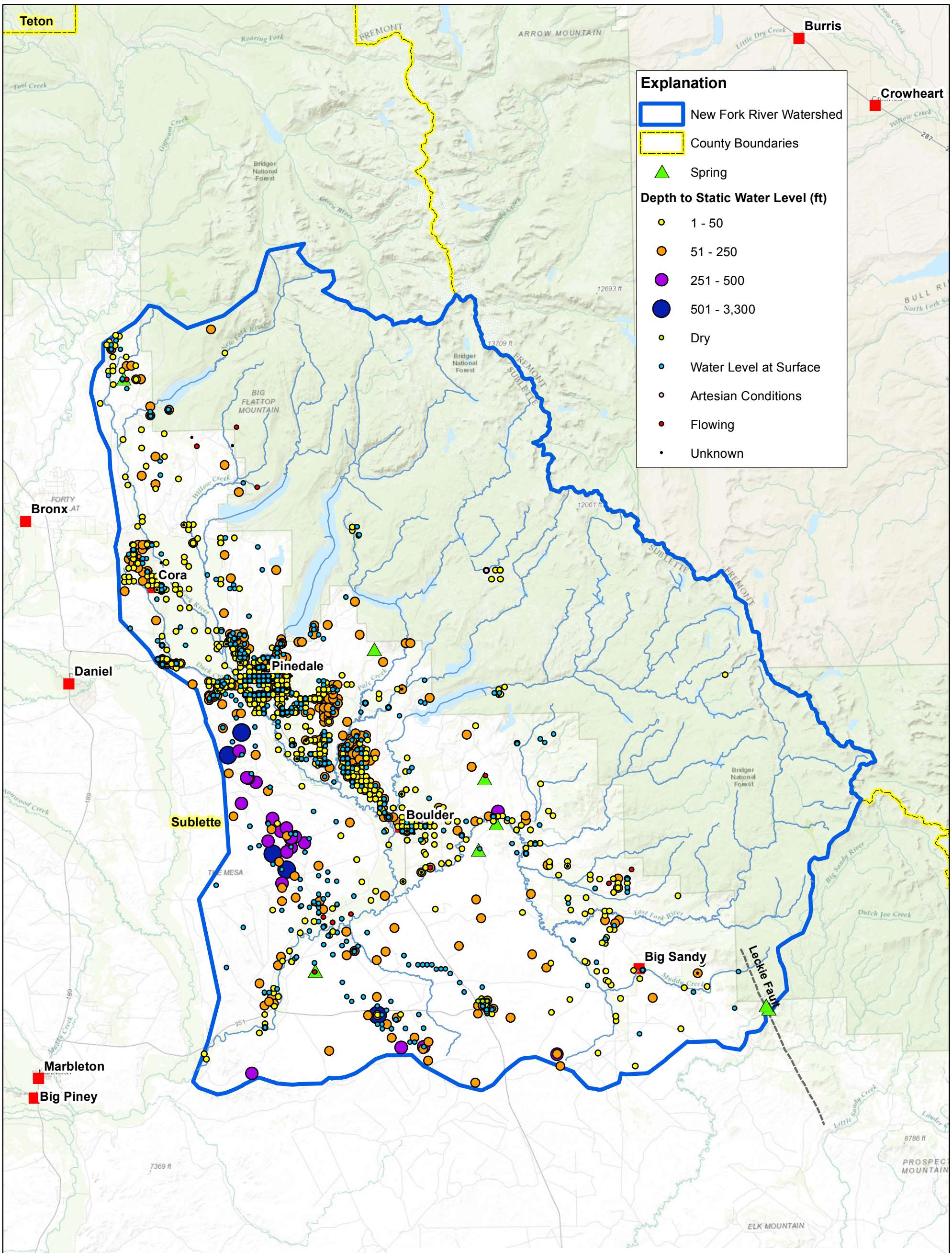

Notes:
1. Spring data was sourced from the Wyoming Water Development Office (2010).
2. WSEO static water level data was sourced from the Wyoming State Engineer's Office (2016).
3. USGS static water level data was sourced from the U.S. Geological Survey (2016).

N

0 2.5 5 10 Miles

Sources: Esri, HERE, DeLorme, Intermap, increment P Corp., GEBCO, USGS, FAO, NPS, NRCAN, GeoBase, IGN, Kadaster NL, Ordnance Survey, Esri Japan, METI, Esri China (Hong Kong), swisstopo, MapmyIndia, © OpenStreetMap contributors, and the GIS User Community

THIS DOCUMENT MUST BE REPRODUCED IN COLOR

Projection: NAD 83 - UTM 12N

RJH CONSULTANTS, INC.

NEW FORK RIVER LEVEL 1 WATERSHED STUDY

DEPTH TO STATIC WATER LEVEL

PROJECT NUMBER 16123

February 2017

Figure 12

P:\16123 - New Fork Level 1\Engineering\1003C_geology\GIS\Figures\Watershed Hydrology\Data From Wells\Figure 12_Static Water Level - NAD 83 UTM 12.mxd

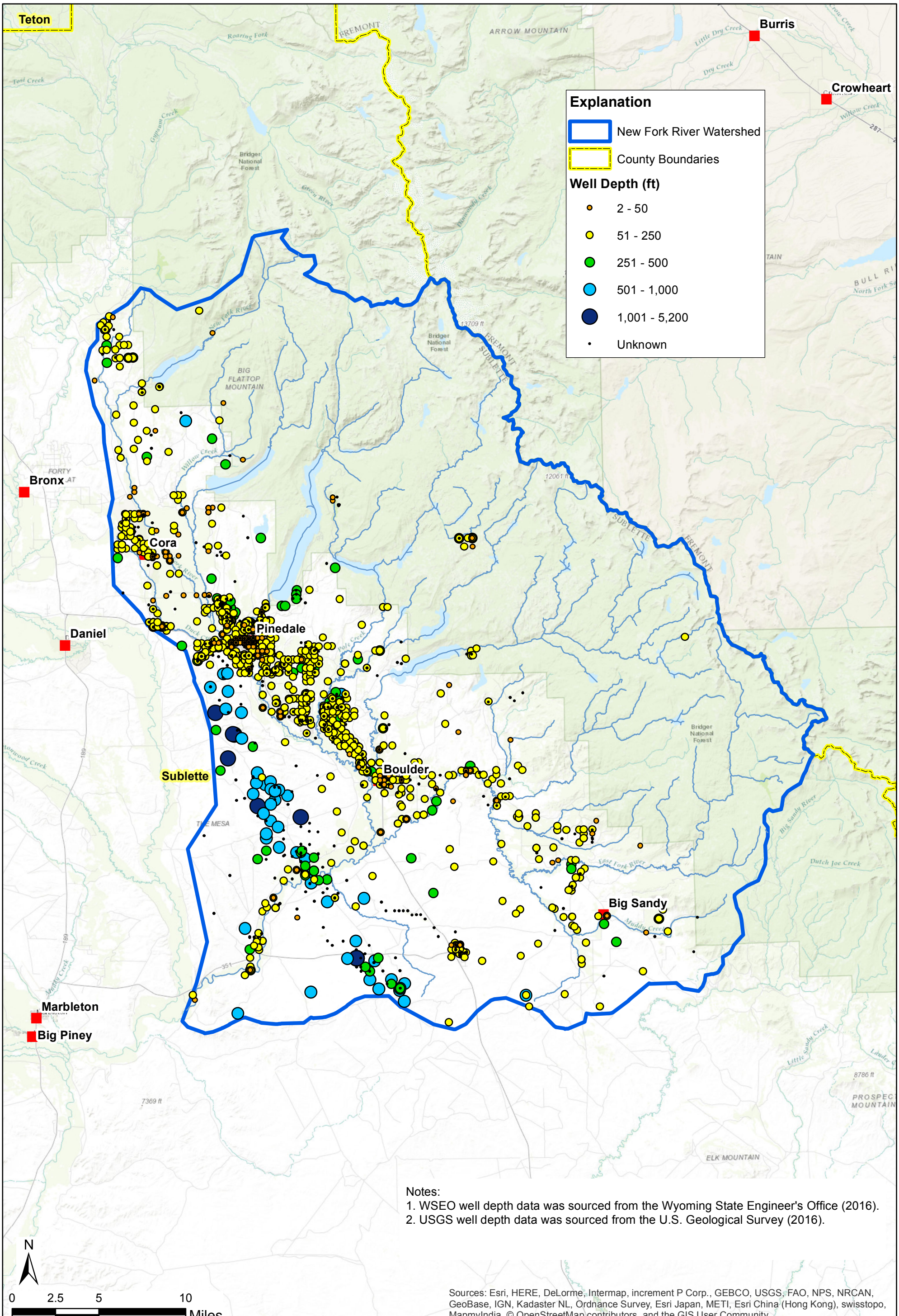

Notes:
1. WSEO well depth data was sourced from the Wyoming State Engineer's Office (2016).
2. USGS well depth data was sourced from the U.S. Geological Survey (2016).

Sources: Esri, HERE, DeLorme, Intermap, increment P Corp., GEBCO, USGS, FAO, NPS, NRCAN, GeoBase, IGN, Kadaster NL, Ordnance Survey, Esri Japan, METI, Esri China (Hong Kong), swisstopo, MapmyIndia, © OpenStreetMap contributors, and the GIS User Community

P:\16123 - New Fork Level 1\Engineering\1003C_geology\GIS\Figures\Watershed Hydrology\Data From Wells\Figure 13_Well Depth - NAD 83 UTM 12.mxd

THIS DOCUMENT MUST BE REPRODUCED IN COLOR

Projection: NAD 83 - UTM 12N

RJH CONSULTANTS, INC.

NEW FORK RIVER LEVEL 1 WATERSHED STUDY

DEPTH OF WELLS

PROJECT NUMBER 16123

February 2017

Figure 13

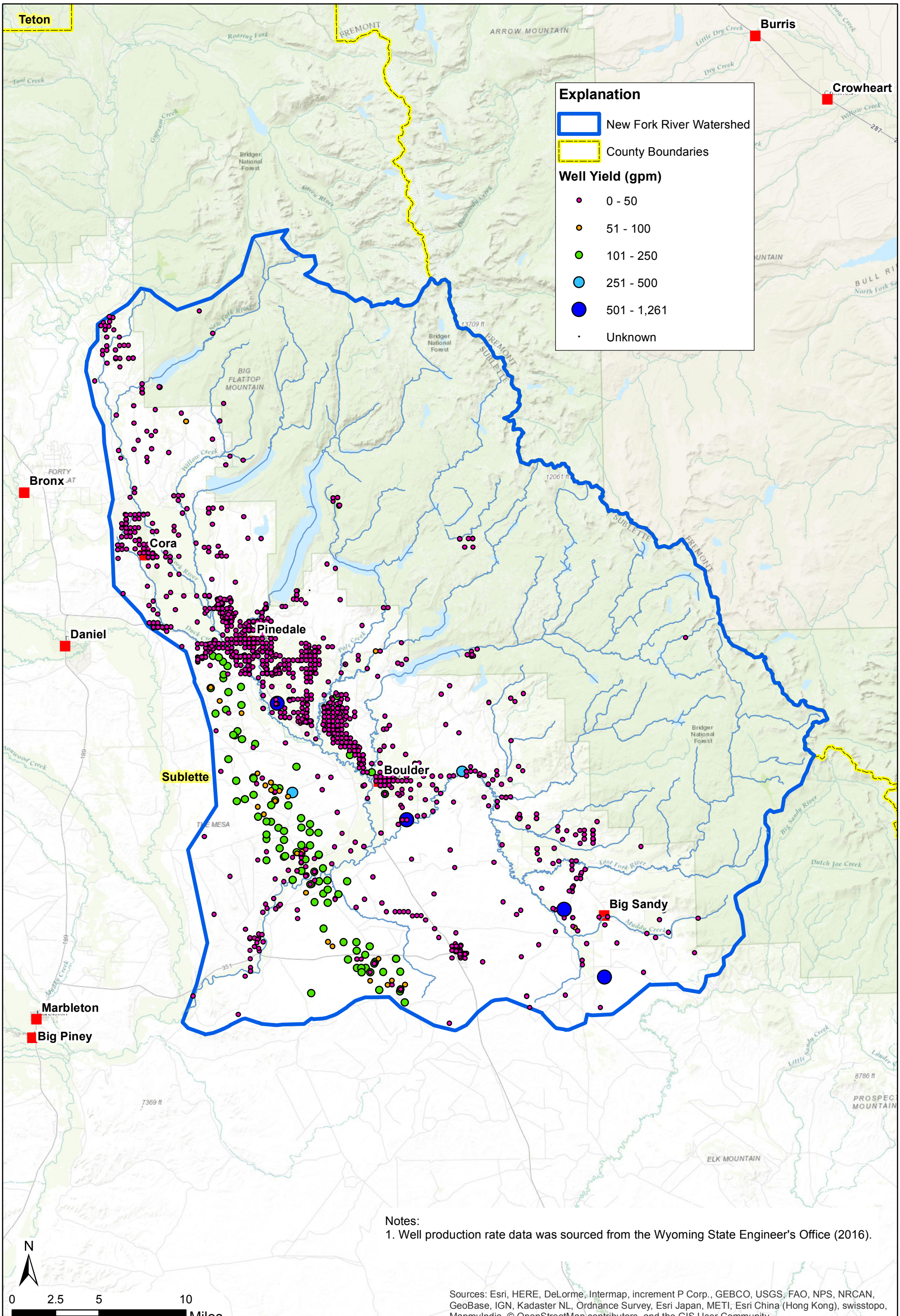

Notes:
1. Well production rate data was sourced from the Wyoming State Engineer's Office (2016).

Sources: Esri, HERE, DeLorme, Intermap, increment P Corp., GEBCO, USGS, FAO, NPS, NRCAN, GeoBase, IGN, Kadaster NL, Ordnance Survey, Esri Japan, METI, Esri China (Hong Kong), swisstopo, MapmyIndia, © OpenStreetMap contributors, and the GIS User Community

P:\16123 - New Fork Level 1\Engineering\1003C_geology\GIS\Figures\Watershed Hydrology\Data From Wells\Figure 14_Well Yield - NAD 83 UTM 12.mxd

THIS DOCUMENT MUST BE REPRODUCED IN COLOR Projection: NAD 83 - UTM 12N	RJH CONSULTANTS, INC.	NEW FORK RIVER LEVEL 1 WATERSHED STUDY	WELL YIELD
		PROJECT NUMBER 16123	February 2017 **Figure 14**

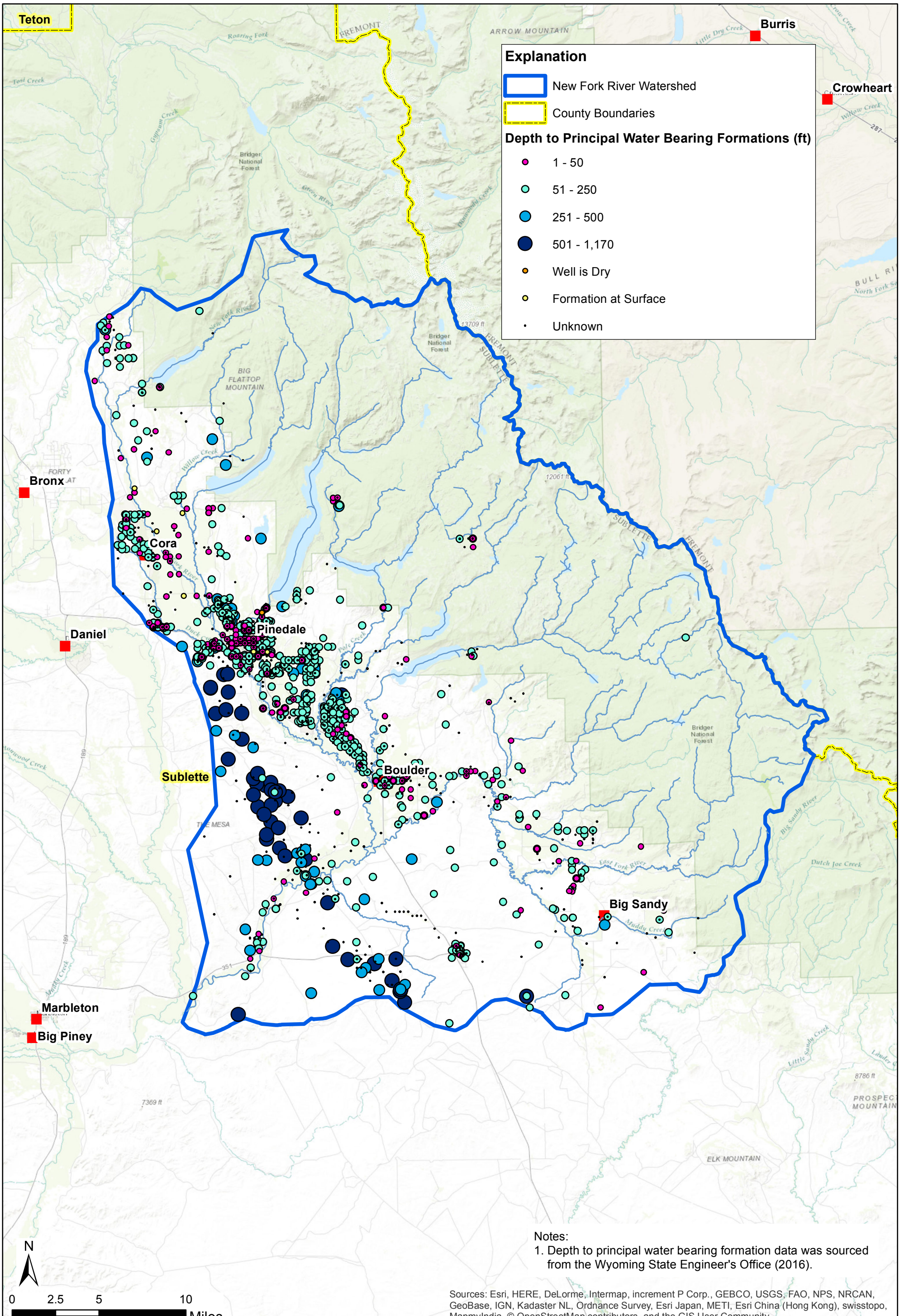

Notes:
1. Depth to principal water bearing formation data was sourced from the Wyoming State Engineer's Office (2016).

Sources: Esri, HERE, DeLorme, Intermap, increment P Corp., GEBCO, USGS, FAO, NPS, NRCAN, GeoBase, IGN, Kadaster NL, Ordnance Survey, Esri Japan, METI, Esri China (Hong Kong), swisstopo, MapmyIndia, © OpenStreetMap contributors, and the GIS User Community

P:\16123 - New Fork Level 1\Engineering\1003C_geology\GIS\Figures\Watershed Hydrology\Data From Wells\Figure 15_Depth to Principal Water Bearing Formations - NAD 83 UTM 12.mxd

THIS DOCUMENT MUST BE REPRODUCED IN COLOR

Projection: NAD 83 - UTM 12N

RJH CONSULTANTS, INC.

NEW FORK RIVER LEVEL 1 WATERSHED STUDY

DEPTH TO PRINCIPAL WATER BEARING FORMATION

PROJECT NUMBER 16123

February 2017

Figure 15

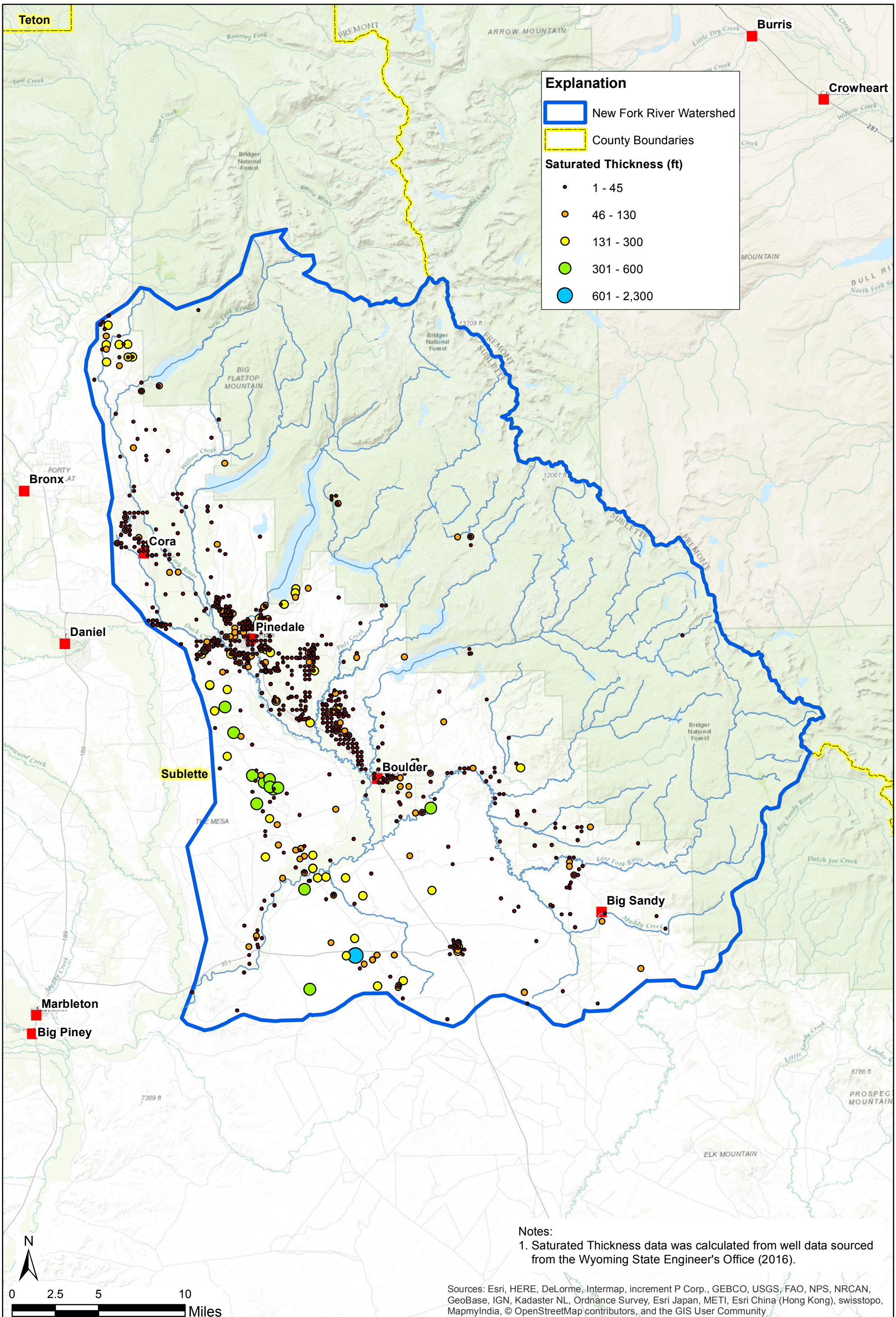

Notes:
1. Saturated Thickness data was calculated from well data sourced from the Wyoming State Engineer's Office (2016).

Sources: Esri, HERE, DeLorme, Intermap, increment P Corp., GEBCO, USGS, FAO, NPS, NRCAN, GeoBase, IGN, Kadaster NL, Ordnance Survey, Esri Japan, METI, Esri China (Hong Kong), swisstopo, MapmyIndia, © OpenStreetMap contributors, and the GIS User Community

P:\16123 - New Fork Level 1\Engineering\1003C_geology\GIS\Figures\Watershed Hydrology\Data From Wells\Figure 16_Saturated Aquifer Thickness - NAD 83 UTM 12.mxd

THIS DOCUMENT MUST BE REPRODUCED IN COLOR

Projection: NAD 83 - UTM 12N

RJH CONSULTANTS, INC.

NEW FORK RIVER LEVEL 1 WATERSHED STUDY

SATURATED AQUIFER THICKNESS

PROJECT NUMBER 16123

February 2017

Figure 16

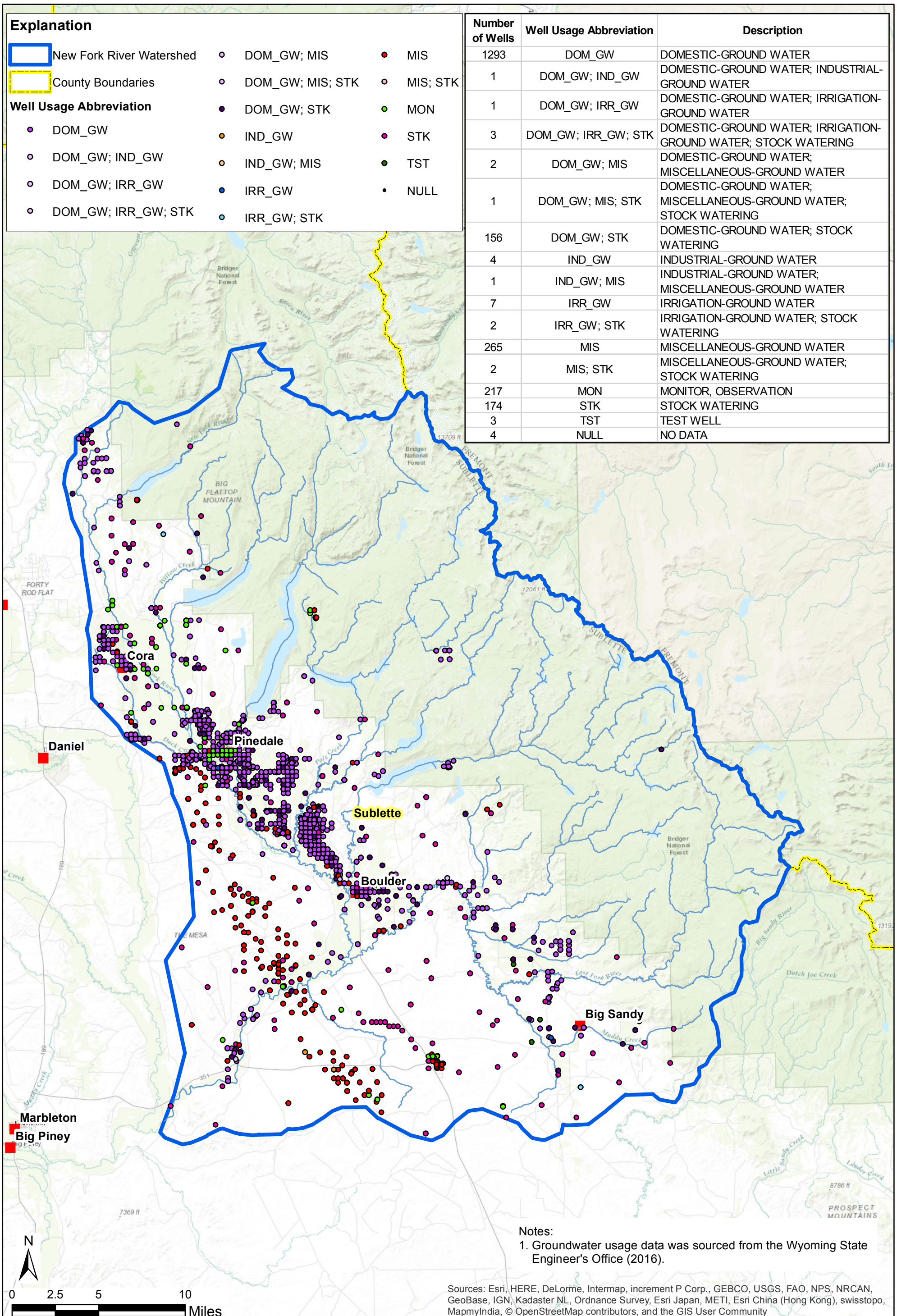

Number of Wells	Well Usage Abbreviation	Description
1293	DOM_GW	DOMESTIC-GROUND WATER
1	DOM_GW; IND_GW	DOMESTIC-GROUND WATER; INDUSTRIAL-GROUND WATER
1	DOM_GW; IRR_GW	DOMESTIC-GROUND WATER; IRRIGATION-GROUND WATER
3	DOM_GW; IRR_GW; STK	DOMESTIC-GROUND WATER; IRRIGATION-GROUND WATER; STOCK WATERING
2	DOM_GW; MIS	DOMESTIC-GROUND WATER; MISCELLANEOUS-GROUND WATER
1	DOM_GW; MIS; STK	DOMESTIC-GROUND WATER; MISCELLANEOUS-GROUND WATER; STOCK WATERING
156	DOM_GW; STK	DOMESTIC-GROUND WATER; STOCK WATERING
4	IND_GW	INDUSTRIAL-GROUND WATER
1	IND_GW; MIS	INDUSTRIAL-GROUND WATER; MISCELLANEOUS-GROUND WATER
7	IRR_GW	IRRIGATION-GROUND WATER
2	IRR_GW; STK	IRRIGATION-GROUND WATER; STOCK WATERING
265	MIS	MISCELLANEOUS-GROUND WATER
2	MIS; STK	MISCELLANEOUS-GROUND WATER; STOCK WATERING
217	MON	MONITOR, OBSERVATION
174	STK	STOCK WATERING
3	TST	TEST WELL
4	NULL	NO DATA

Notes:
1. Groundwater usage data was sourced from the Wyoming State Engineer's Office (2016).

Sources: Esri, HERE, DeLorme, Intermap, increment P Corp., GEBCO, USGS, FAO, NPS, NRCAN, GeoBase, IGN, Kadaster NL, Ordnance Survey, Esri Japan, METI, Esri China (Hong Kong), swisstopo, MapmyIndia, © OpenStreetMap contributors, and the GIS User Community

THIS DOCUMENT MUST BE REPRODUCED IN COLOR

Projection: NAD 83 - UTM 12N

RJH CONSULTANTS, INC.

NEW FORK RIVER LEVEL 1 WATERSHED STUDY

GROUNDWATER USAGE

PROJECT NUMBER 16123

February 2017

Figure 17

P:\16123 - New Fork Level 1\Engineering\1003C_geology\GIS\Figures\Watershed Hydrology\Data From Wells\Figure 17_Groundwater Usage - NAD 83 UTM 12.mxd

ATTACHMENT A

SEISMIC DATA

RJH Consultants, Inc.

New Fork River Watershed Study
Attachment A: Site Specific Peak Ground Acceleration (PGA) Evaluation

Seismic Evaluation Location	Application	Probability of Exceedance	Return Interval (yrs)	PGA (g)	Rock Type
Location 1	2008[1]	1% in 50 years	4975	0.64	B/C
	2008[1]	2% in 50 years	2475	0.47	B/C
	2014[2]	2% in 50 years	2475	0.64	C
Location 2	2008[1]	1% in 50 years	4975	0.43	B/C
	2008[1]	2% in 50 years	2475	0.31	B/C
	2014[2]	2% in 50 years	2475	0.46	C
Location 3	2008[1]	1% in 50 years	4975	0.41	B/C
	2008[1]	2% in 50 years	2475	0.30	B/C
	2014[2]	2% in 50 years	2475	0.44	C

Notes:

1. Ground motion was estimated using the 2008 Interactive Deaggregations application provided by the USGS (USGS, 2017a)
2. Ground motion was estimated using the U.S. Seismic Design Maps (Beta) application provided by the USGS (USGS, 2017b)

PSH Deaggregation on NEHRP BC rock
Location_1 109.972º W, 43.078 N.

SA period 0.20 sec. Accel.>=0.6368 g
Ann. Exceedance Rate .200E-03. Mean Return Time 4975 yrs
Mean (R,M,ε_0) 18.4 km,6.05, 0.72
Modal (R,M,ε_0) = 7.9 km, 6.20,-0.07 (from peak R,M bin)
Modal (R,M,ε*) = 7.9 km, 6.20, 0 to 1 sigma (from peak R,M,ε bin)
Binning: DeltaR=10. km, deltaM=0.2, Deltaε=1.0

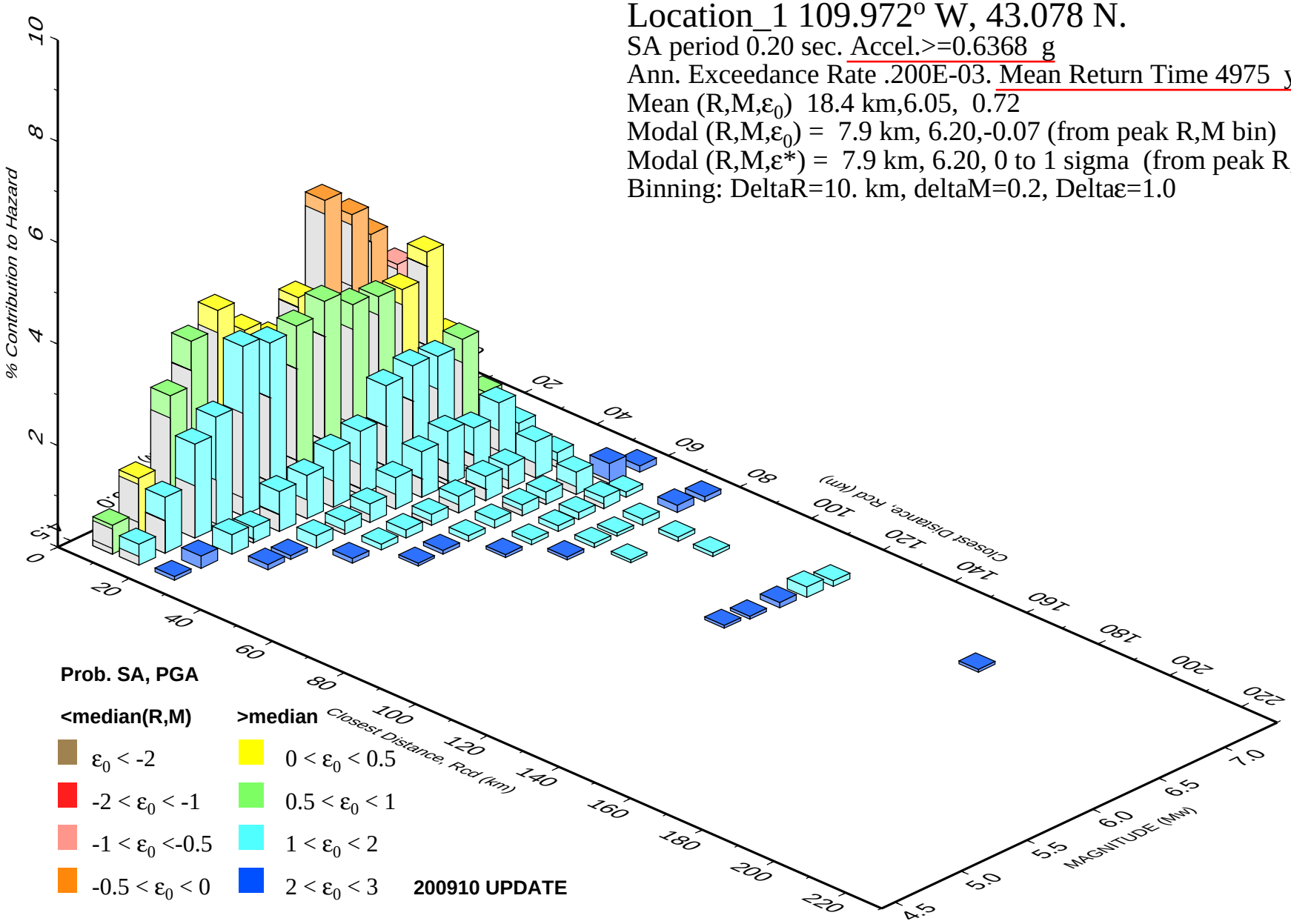

Location 1

GMT 2017 Jan 5 14:44:12 **Distance (R), magnitude (M), epsilon (E0,E) deaggregation for a site on rock with average vs= 760. m/s top 30 m. USGS CGHT PSHA2008 UPDATE Bins with lt 0.05% contrib. omitted**

PSH Deaggregation on NEHRP BC rock
Location_1 109.972º W, 43.078 N.

SA period 0.20 sec. Accel.>=0.4682 g
Ann. Exceedance Rate .402E-03. Mean Return Time 2475 yrs
Mean (R,M,ε_0) 23.6 km,6.05, 0.65
Modal (R,M,ε_0) = 14.6 km, 5.40, 0.91 (from peak R,M bin)
Modal (R,M,ε*) = 14.6 km, 5.40, 1 to 2 sigma (from peak R,M,ε bin)
Binning: DeltaR=10. km, deltaM=0.2, Deltaε=1.0

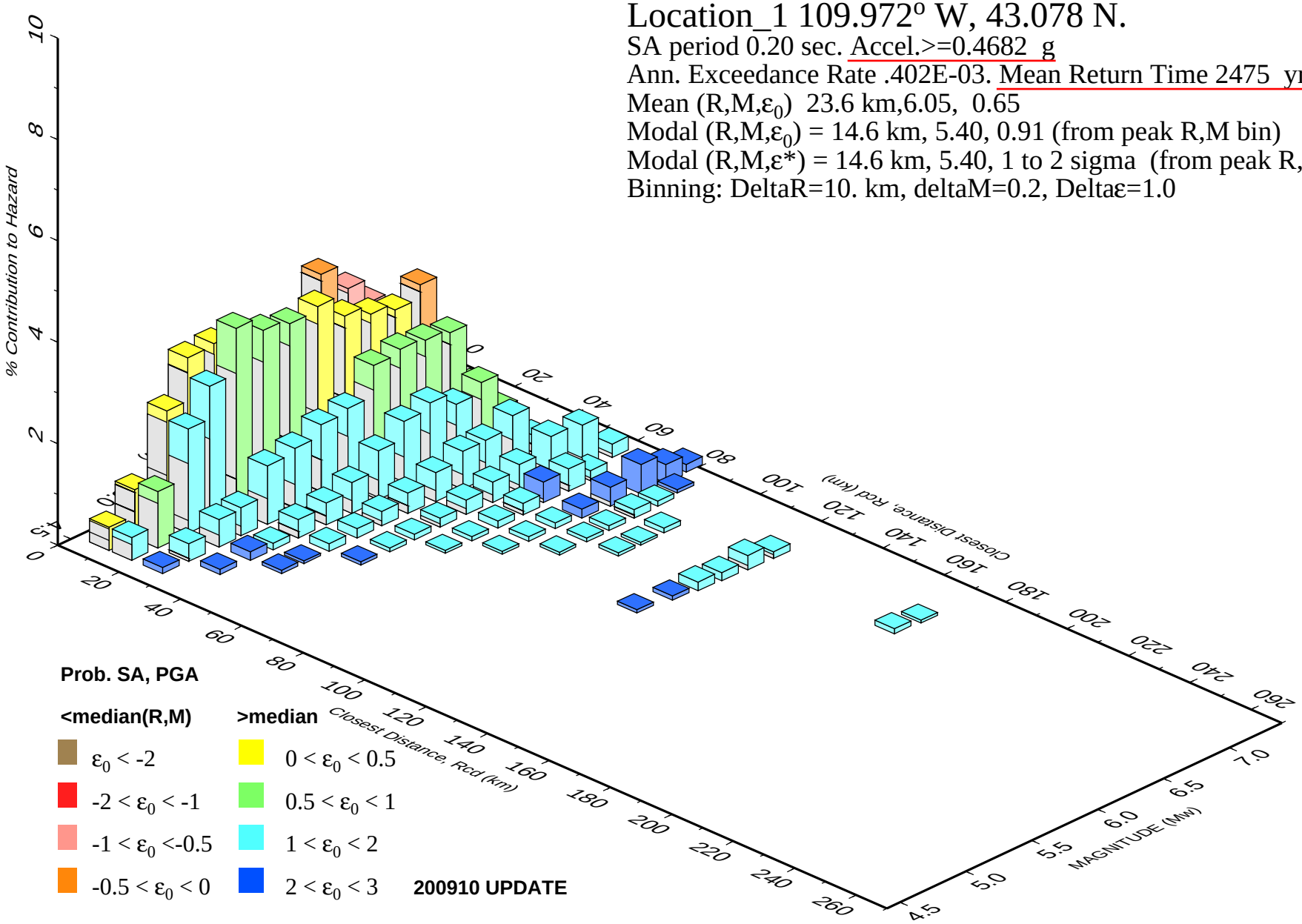

Location 1

GMT 2017 Jan 5 14:39:12 Distance (R), magnitude (M), epsilon (E0,E) deaggregation for a site on rock with average vs= 760. m/s top 30 m. USGS CGHT PSHA2008 UPDATE Bins with lt 0.05% contrib. omitted

U.S. Geological Survey - Earthquake Hazards Program

Location 1: New Fork Lakes_2014

Latitude = 43.079°N, Longitude = 109.972°W

Location

Reference Document

2015 NEHRP Provisions

Site Class

C: Very Dense Soil and Soft Rock

Risk Category

IV e.g. (Essential Facilities)

S_S =	0.489 g	S_{MS} =	0.636 g	S_{DS} =	0.424 g
S_1 =	0.153 g	S_{M1} =	0.230 g	S_{D1} =	0.153 g

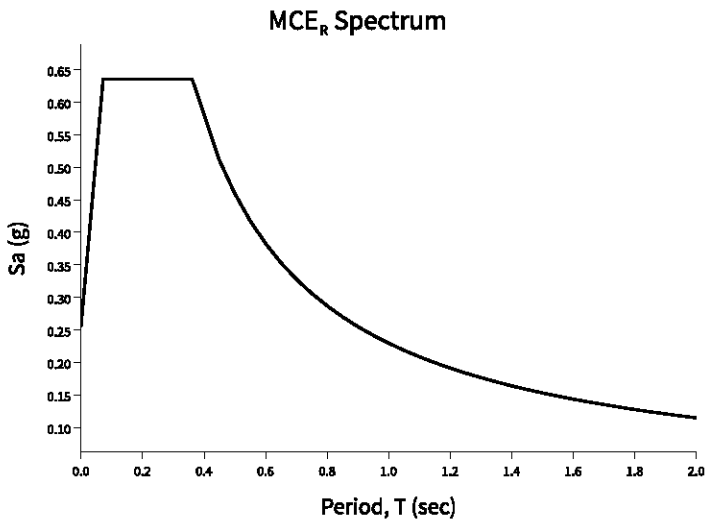
MCE$_R$ Spectrum
Sa (g)
0.65
0.60
0.55
0.50
0.45
0.40
0.35
0.30
0.25
0.20
0.15
0.10
0.0
0.2
0.4
0.6
0.8
1.0
1.2
1.4
1.6
1.8
2.0
Period, T (sec)

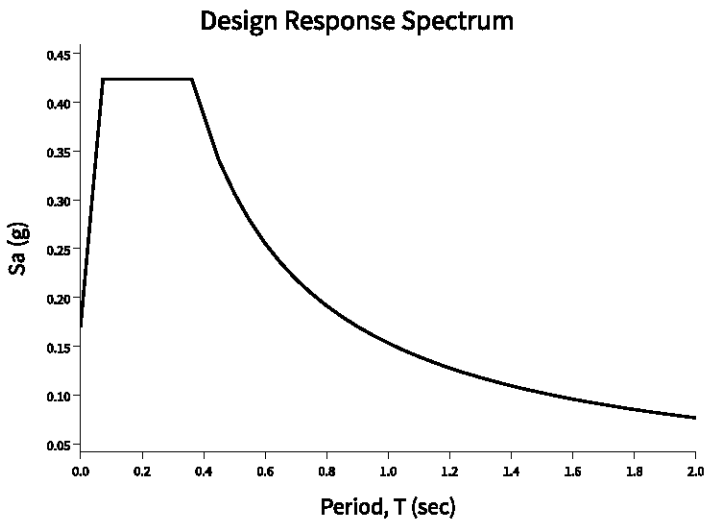
Design Response Spectrum
Sa (g)
0.45
0.40
0.35
0.30
0.25
0.20
0.15
0.10
0.05
0.0
0.2
0.4
0.6
0.8
1.0
1.2
1.4
1.6
1.8
2.0
Period, T (sec)

Location 1

Mapped Acceleration Parameters, Long-Period Transition Periods, and Risk Coefficients

Note: The S_S and S_1 ground motion maps provided below are for the direction of maximmum horizontal spectral response acceleration. They have been converted from corresponding geometric mean ground motions computed by the USGS by applying factors of 1.1 (to obtain S_S) 1.3 (to obtain S_1).

- FIGURE 22-1 S_S Risk-Targeted Maximum Considered Earthquake (MCE_R) Ground Motion Parameter for the Conterminous United States for 0.2 s Spectral Response Acceleration (5% of Critical Damping), Site Class B
- FIGURE 22-2 S_1 Risk-Targeted Maximum Considered Earthquake (MCE_R) Ground Motion Parameter for the Conterminous United States for 1.0 s Spectral Response Acceleration (5% of Critical Damping), Site Class B
- FIGURE 22-9 Maximum Considered Earthquake Geometric Mean (MCE_G) PGA, %g, Site Class B for the Conterminous United States
- FIGURE 22-14 Mapped Long-Period Transition Period, T_L (s), for the Conterminous United States
- FIGURE 22-18 Mapped Risk Coefficient at 0.2 s Spectral Response Period, C_{RS}
- FIGURE 22-19 Mapped Risk Coefficient at 1.0 s Spectral Response Period, C_{R1}

Location 1

Site Class

The authority having jurisdiction (not the USGS), site-specific geotechnical data, and/or the default has classified the site class as Site Class , based on the site soil properties in accordance with Chapter 20.

Table 20.3-1 Site Classification

Site Class	$\bar{v}_s$	$\bar{N}$ or $\bar{N}_{ch}$	$\bar{s}_u$
A. Hard Rock	>5,000 ft/s	N/A	N/A
B. Rock	2,500 to 5,000 ft/s	N/A	N/A
C. Very dense soil and soft rock	1,200 to 2,500 ft/s	>50	>2,000 psf
D. Stiff Soil	600 to 1,200 ft/s	15 to 50	1,000 to 2,000 psf
E. Soft clay soil	<600 ft/s	<15	<1,000 psf
	Any profile with more than 10 ft of soil having the characteristics: • Plasticity index PI > 20 • Moisture content w ≥ 40%, and • Undrained shear strength $\bar{s}_u$ < 500 psf		
F. Soils requiring site response analysis in accordance with Section 21.1	See Section 20.3.1		
For SI: 1ft/s = 0.3048 m/s 1lb/ft^2 = 0.0479 kN/m^2			

Location 1

Site Coefficients and Risk-Targeted Maximum Considered Earthquake (MCE_R) Spectral Response Acceleration Parameters

Risk-targeted Ground Motion (0.2 s)

$C_{RS}S_{SUH} = 0.930 \times 0.526 = 0.489$ g

Deterministic Ground Motion (0.2 s)

$S_{SD} = 1.500$ g

$S_S \equiv$ "Lesser of $C_{RS}S_{SUH}$ and S_{SD}" = 0.489 g

Risk-targeted Ground Motion (1.0 s)

$C_{R1}S_{1UH} = 0.937 \times 0.163 = 0.153$ g

Deterministic Ground Motion (1.0 s)

$S_{1D} = 0.600$ g

$S_1 \equiv$ "Lesser of $C_{R1}S_{1UH}$ and S_{1D}" = 0.153 g

Table 11.4-1: Site Coefficient F_a

Site Class	Spectral Reponse Acceleration Parameter at Short Period					
	$S_S \leq 0.25$	$S_S = 0.50$	$S_S = 0.75$	$S_S = 1.00$	$S_S = 1.25$	$S_S \geq 1.50$
A	0.8	0.8	0.8	0.8	0.8	0.8
B (measured)	0.9	0.9	0.9	0.9	0.9	0.9
B (unmeasured)	1.0	1.0	1.0	1.0	1.0	1.0
C	1.3	1.3	1.2	1.2	1.2	1.2
D (determined)	1.6	1.4	1.2	1.1	1.0	1.0
D (default)	1.6	1.4	1.2	1.2	1.2	1.2
E	2.4	1.7	1.3	1.2 *	1.2 *	1.2 *
F	See Section 11.4.7					

* For Site Class E and $S_S \geq 1.0$ g, see the requirements for site-specific ground motions in Section 11.4.7 of the 2015 NEHRP Provisions. Here the exception to those requirements allowing F_a to be taken as equal to that of Site Class C has been invoked.

Note: Use straight-line interpolation for intermediate values of S_S.

Location 1

Note: Where Site Class B is selected, but site-specific velocity measurements are not made, the value of F_a shall be taken as 1.0 per Section 11.4.2.

Note: Where Site Class D is selected as the default site class per Section 11.4.2, the value of F_a shall not be less than 1.2 per Section 11.4.3.

For Site Class = C and S_s = 0.489 g, F_a = 1.300

Location 1

Table 11.4-2: Site Coefficient F_v

Site Class	Spectral Response Acceleration Parameter at 1-Second Period					
	$S_1 \leq 0.10$	$S_1 = 0.20$	$S_1 = 0.30$	$S_1 = 0.40$	$S_1 = 0.50$	$S_1 \geq 0.60$
A	0.8	0.8	0.8	0.8	0.8	0.8
B (measured)	0.8	0.8	0.8	0.8	0.8	0.8
B (unmeasured)	1.0	1.0	1.0	1.0	1.0	1.0
C	1.5	1.5	1.5	1.5	1.5	1.4
D (determined)	2.4	2.2 [1]	2.0 [1]	1.9 [1]	1.8 [1]	1.7 [1]
D (default)	2.4	2.2 [1]	2.0 [1]	1.9 [1]	1.8 [1]	1.7 [1]
E	4.2	3.3 [1]	2.8 [1]	2.4 [1]	2.2 [1]	2.0 [1]
F	See Section 11.4.7					

[1] For Site Class D or E and $S_1 \geq 0.2$ g, site-specific ground motions might be required. See Section 11.4.7 of the 2015 NEHRP Provisions.

Note: Use straight-line interpolation for intermediate values of S_1.

Note: Where Site Class B is selected, but site-specific velocity measurements are not made, the value of F_v shall be taken as 1.0 per Section 11.4.2.

For Site Class = C and S_1 = 0.153 g, F_v = 1.500

Site-adjusted MCE_R (0.2 s)

$$S_{MS} = F_a S_S = 1.300 \times 0.489 = 0.636 \text{ g}$$

Site-adjusted MCE_R (1.0 s)

$$S_{M1} = F_v S_1 = 1.500 \times 0.153 = 0.230 \text{ g}$$

Location 1

Design Spectral Acceleration Parameters

Design Ground Motion (0.2 s)

$$S_{DS} = \frac{2}{3} S_{MS} = \frac{2}{3} \times 0.636 = 0.424 \text{ g}$$

Design Ground Motion (1.0 s)

$$S_{D1} = \frac{2}{3} S_{M1} = \frac{2}{3} \times 0.230 = 0.153 \text{ g}$$

Location 1

Design Response Spectrum

Long-Period Transition Period = T_L = 8 s

Figure 11.4-1: Design Response Spectrum

Location 1

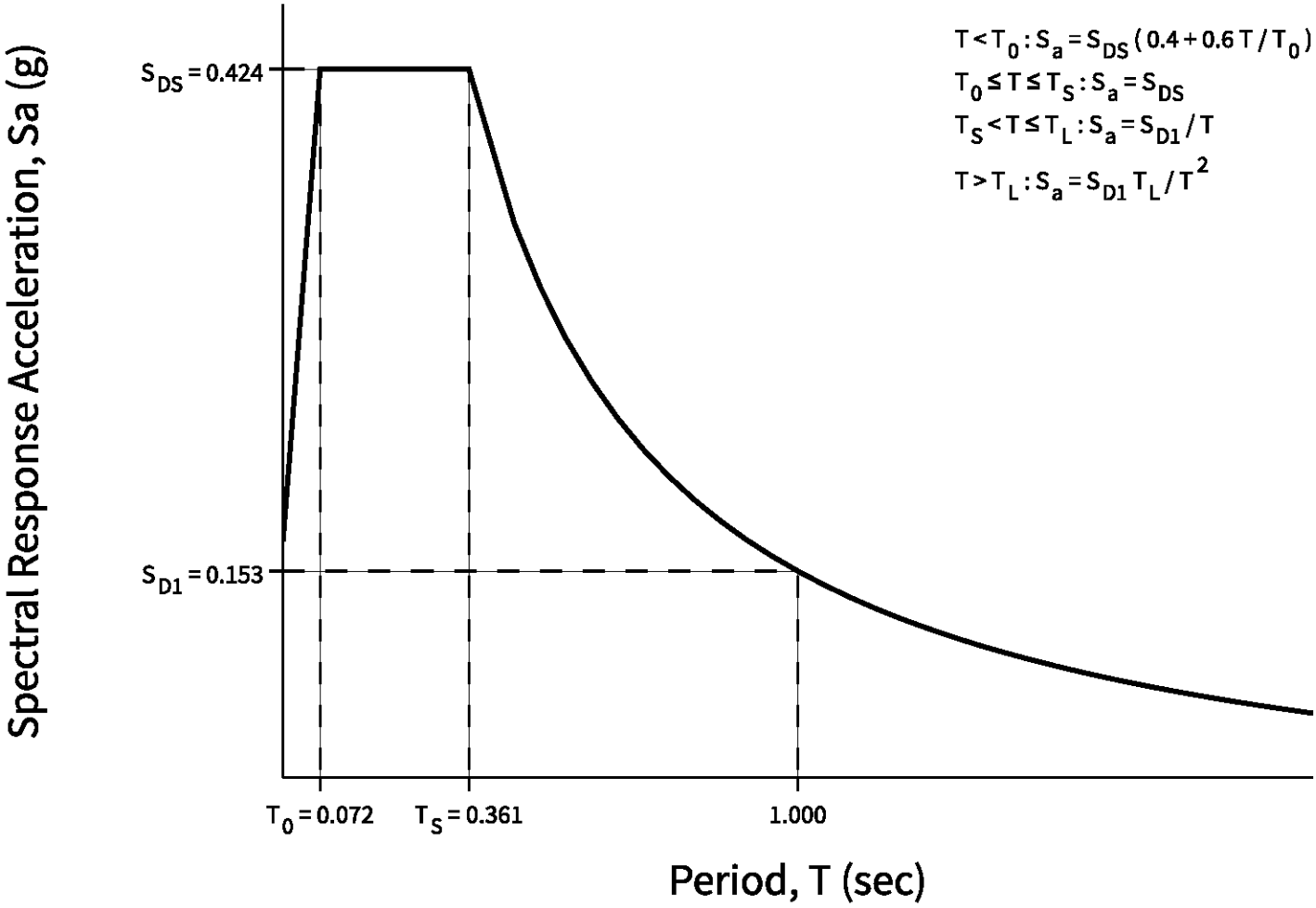
Spectral Response Acceleration, Sa (g)
$S_{DS} = 0.424$
$S_{D1} = 0.153$
$T < T_0 : S_a = S_{DS}(0.4 + 0.6T/T_0)$
$T_0 \le T \le T_S : S_a = S_{DS}$
$T_S < T \le T_L : S_a = S_{D1}/T$
$T > T_L : S_a = S_{D1}T_L/T^2$
$T_0 = 0.072$
$T_S = 0.361$
1.000
Period, T (sec)

Location 1

MCE_R Response Spectrum

The MCE_R response spectrum is determined by multiplying the design response spectrum above by 1.5.

Location 1

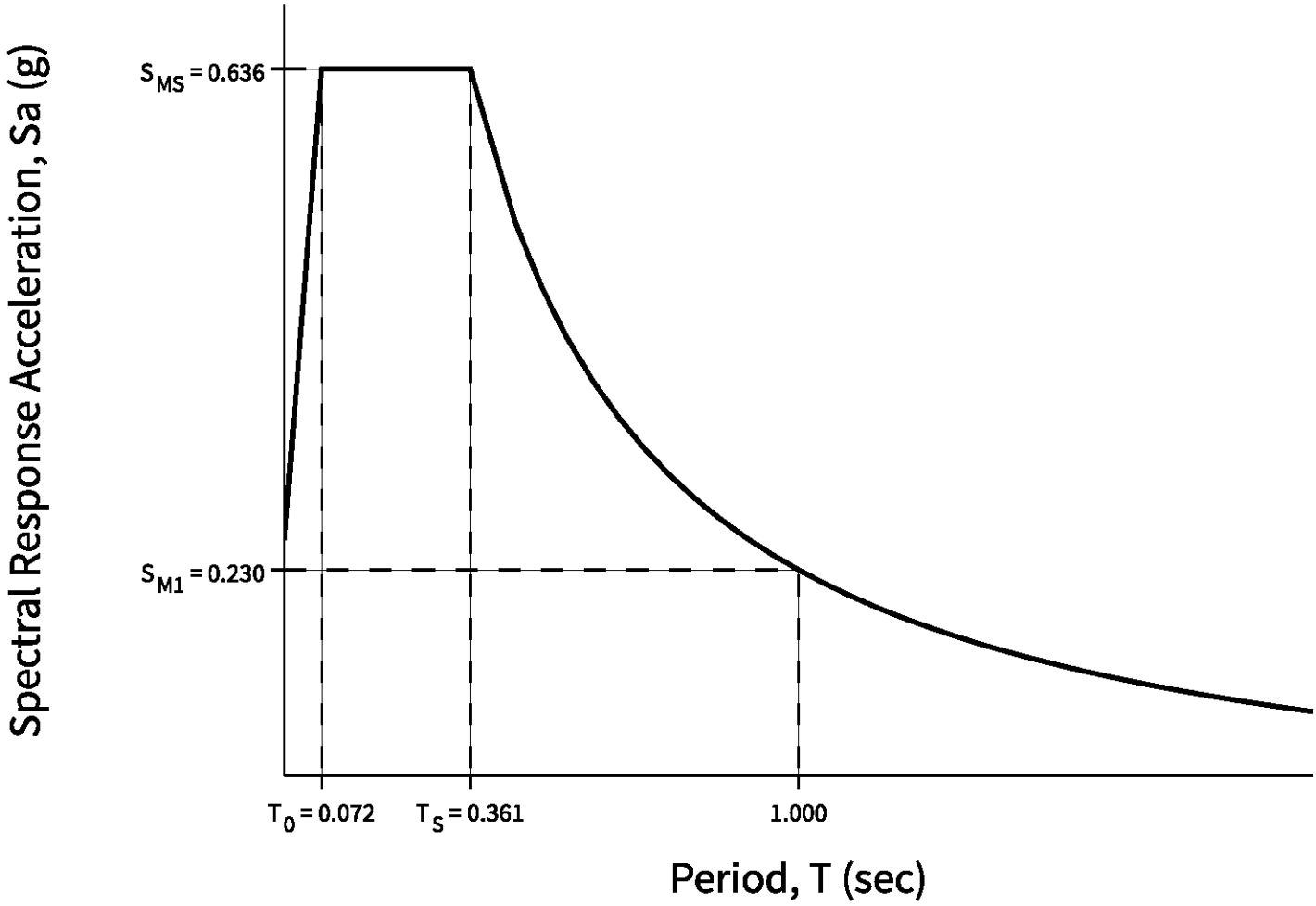
Spectral Response Acceleration, Sa (g)
S_{MS} = 0.636
S_{M1} = 0.230
T_0 = 0.072
T_S = 0.361
1.000
Period, T (sec)

Location 1

Additional Geotechnical Investigation Report Requirements for Seismic Design Categories D through F

Table 11.8-1: Site Coefficient for F_{PGA}

Site Class	Mapped MCE Geometric Mean (MCE_G) Peak Ground Acceleration					
	PGA ≤ 0.10	PGA = 0.20	PGA = 0.30	PGA = 0.40	PGA = 0.50	PGA ≥ 0.60
A	0.8	0.8	0.8	0.8	0.8	0.8
B (measured)	0.9	0.9	0.9	0.9	0.9	0.9
B (unmeasured)	1.0	1.0	1.0	1.0	1.0	1.0
C	1.3	1.2	1.2	1.2	1.2	1.2
D (determined)	1.6	1.4	1.3	1.2	1.1	1.1
D (default)	1.6	1.4	1.3	1.2	1.2	1.2
E	2.4	1.9	1.6	1.4	1.2	1.1
F	See Section 11.4.7					

Note: Use straight-line interpolation for intermediate values of PGA

Note: Where Site Class D is selected as the default site class per Section 11.4.2, the value of F_{pga} shall not be less than 1.2.

For Site Class = C and PGA = 0.245 g, F_{PGA} = 1.200

Mapped MCE_G

PGA = 0.245 g

Site-adjusted MCE_G

$PGA_M = F_{PGA}PGA = 1.200 \times 0.245 = 0.294$ g

Location 1

Location 1

PSH Deaggregation on NEHRP BC rock
Location_2 109.655º W, 42.859 N.

SA period 0.20 sec. Accel.>=0.4332 g
Ann. Exceedance Rate .202E-03. Mean Return Time 4975 yrs
Mean (R,M,ε_0) 33.6 km,5.96, 0.61
Modal (R,M,ε_0) = 15.5 km, 5.40, 0.43 (from peak R,M bin)
Modal (R,M,ε*) = 15.2 km, 4.80, 1 to 2 sigma (from peak R,M,ε bin)
Binning: DeltaR=10. km, deltaM=0.2, Deltaε=1.0

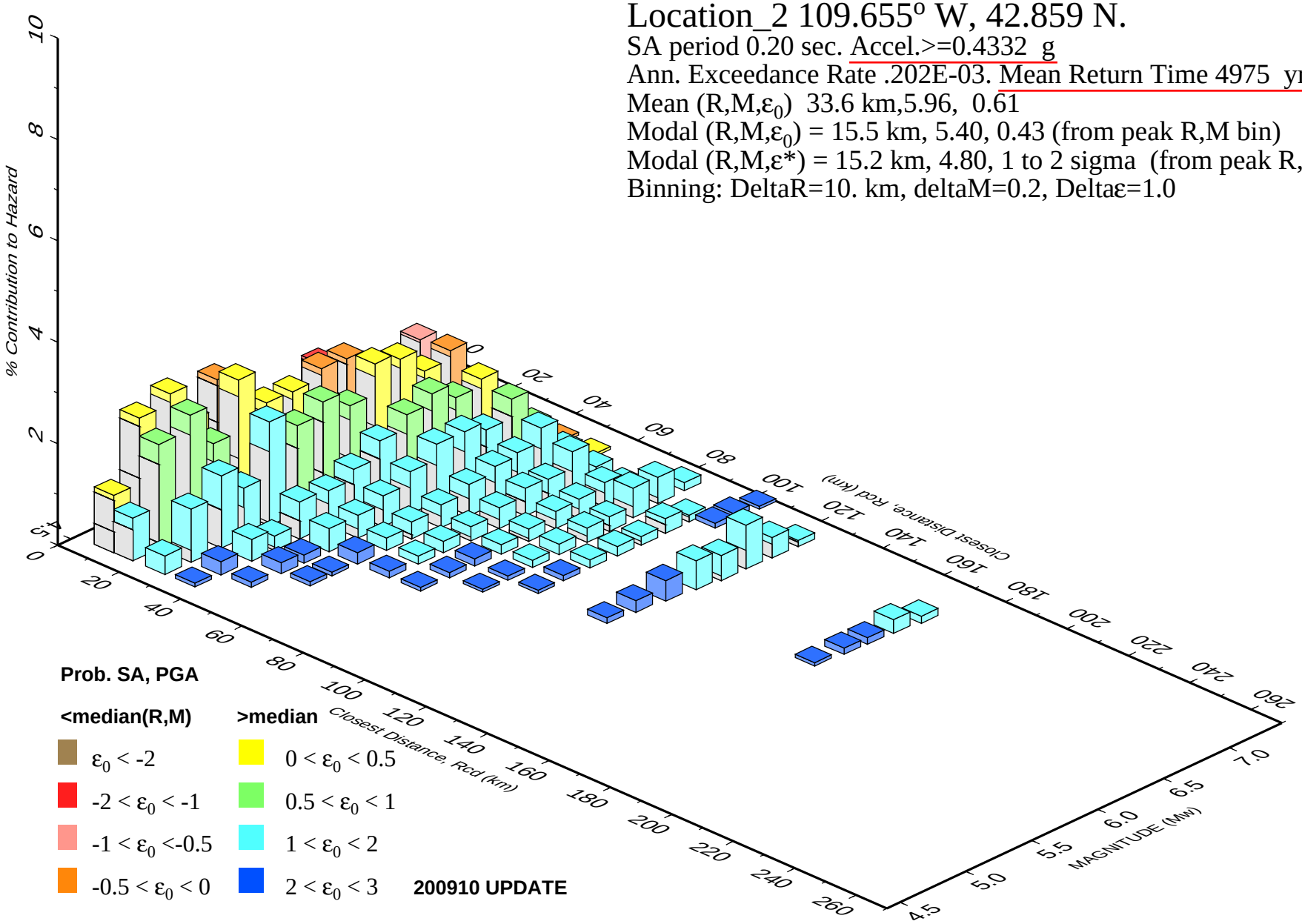

Location 2

GMT 2017 Jan 5 14:44:50 **Distance (R), magnitude (M), epsilon (E0,E) deaggregation for a site on rock with average vs= 760. m/s top 30 m. USGS CGHT PSHA2008 UPDATE Bins with lt 0.05% contrib. omitted**

PSH Deaggregation on NEHRP BC rock
Location_2 109.655º W, 42.859 N.

SA period 0.20 sec. Accel.>=0.3138 g
Ann. Exceedance Rate .407E-03. Mean Return Time 2475 yrs
Mean (R,M,ε_0) 43.9 km,6.00, 0.64
Modal (R,M,ε_0) = 15.7 km, 5.40, 0.12 (from peak R,M bin)
Modal (R,M,ε*) = 25.7 km, 5.40, 1 to 2 sigma (from peak R,M,ε bin)
Binning: DeltaR=10. km, deltaM=0.2, Deltaε=1.0

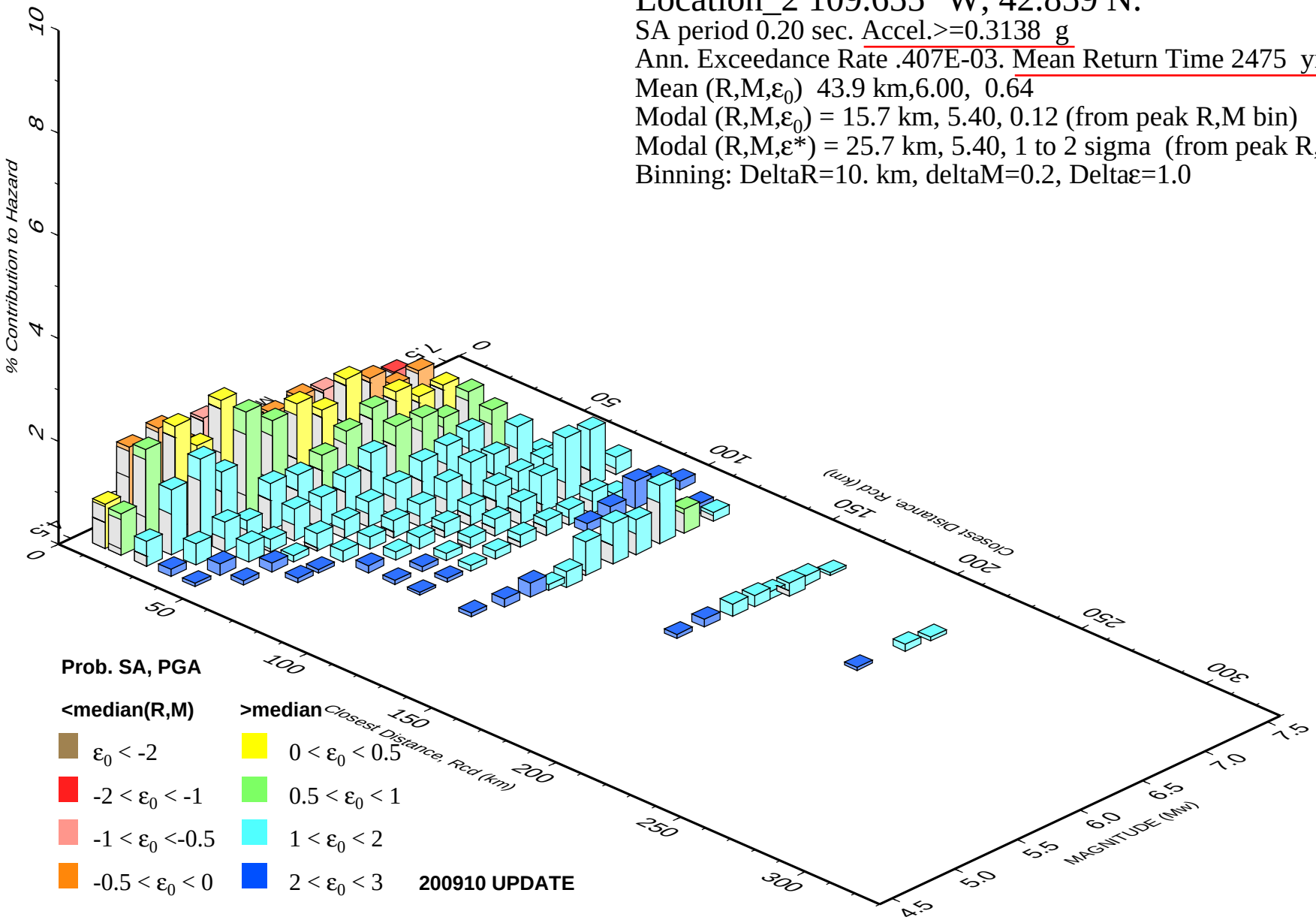

Location 2

GMT 2017 Jan 5 14:37:30 **Distance (R), magnitude (M), epsilon (E0,E) deaggregation for a site on rock with average vs= 760. m/s top 30 m. USGS CGHT PSHA2008 UPDATE Bins with lt 0.05% contrib. omitted**

U.S. Geological Survey - Earthquake Hazards Program

Location 2: Boulder Lake_2014

Latitude = 42.859°N, Longitude = 109.655°W

Location

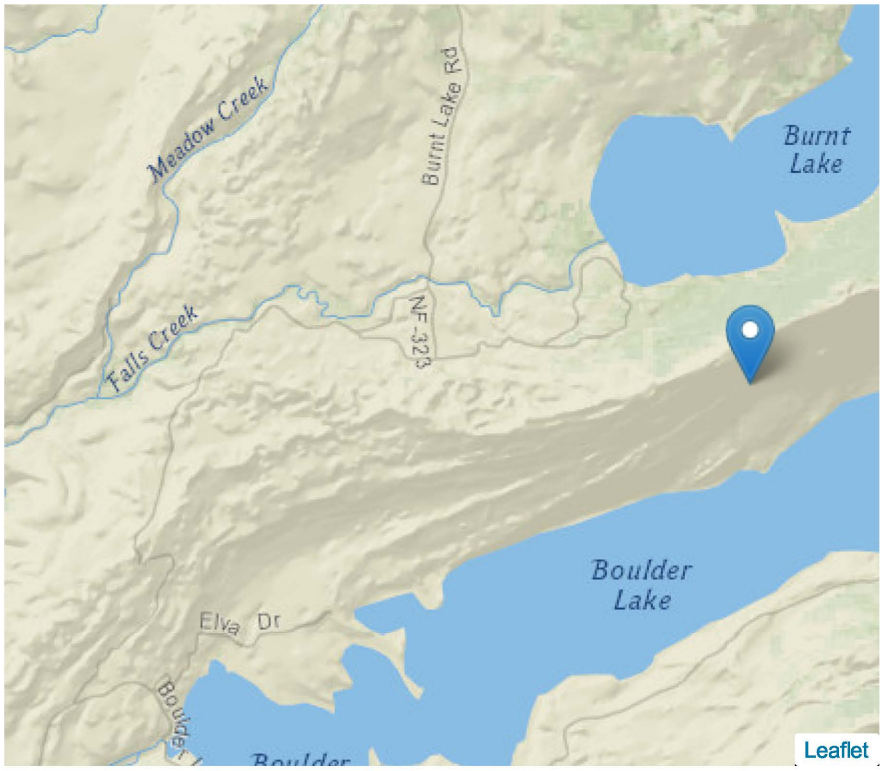

Reference Document

2015 NEHRP Provisions

Site Class

C: Very Dense Soil and Soft Rock

Risk Category

IV e.g. (Essential Facilities)

S_S =	0.355 g	S_{MS} =	0.462 g	S_{DS} =	0.308 g
S_1 =	0.113 g	S_{M1} =	0.169 g	S_{D1} =	0.113 g

Location 2

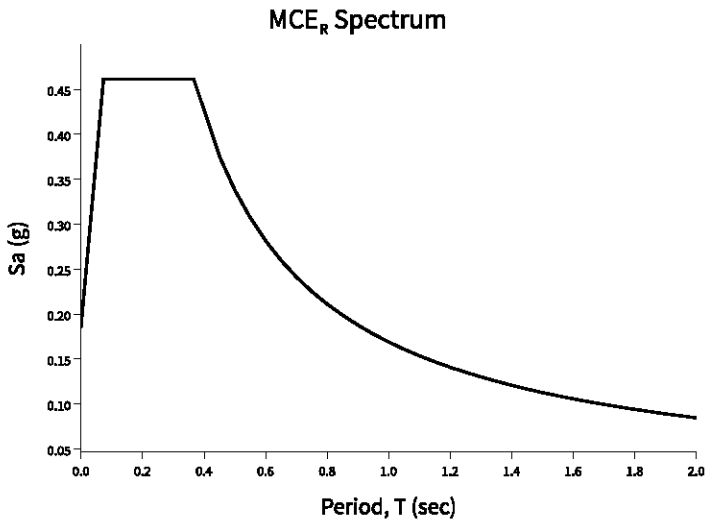
MCE$_R$ Spectrum
Sa (g)
0.45
0.40
0.35
0.30
0.25
0.20
0.15
0.10
0.05
0.0
0.2
0.4
0.6
0.8
1.0
1.2
1.4
1.6
1.8
2.0
Period, T (sec)

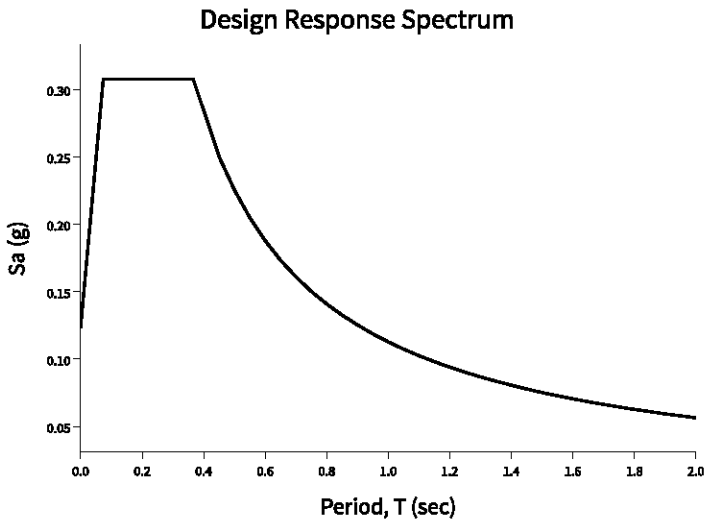
Design Response Spectrum
Sa (g)
0.30
0.25
0.20
0.15
0.10
0.05
0.0
0.2
0.4
0.6
0.8
1.0
1.2
1.4
1.6
1.8
2.0
Period, T (sec)

Location 2

Mapped Acceleration Parameters, Long-Period Transition Periods, and Risk Coefficients

Note: The S_S and S_1 ground motion maps provided below are for the direction of maximmum horizontal spectral response acceleration. They have been converted from corresponding geometric mean ground motions computed by the USGS by applying factors of 1.1 (to obtain S_S) 1.3 (to obtain S_1).

- FIGURE 22-1 S_S Risk-Targeted Maximum Considered Earthquake (MCE_R) Ground Motion Parameter for the Conterminous United States for 0.2 s Spectral Response Acceleration (5% of Critical Damping), Site Class B
- FIGURE 22-2 S_1 Risk-Targeted Maximum Considered Earthquake (MCE_R) Ground Motion Parameter for the Conterminous United States for 1.0 s Spectral Response Acceleration (5% of Critical Damping), Site Class B
- FIGURE 22-9 Maximum Considered Earthquake Geometric Mean (MCE_G) PGA, %g, Site Class B for the Conterminous United States
- FIGURE 22-14 Mapped Long-Period Transition Period, T_L (s), for the Conterminous United States
- FIGURE 22-18 Mapped Risk Coefficient at 0.2 s Spectral Response Period, C_{RS}
- FIGURE 22-19 Mapped Risk Coefficient at 1.0 s Spectral Response Period, C_{R1}

Location 2

Site Class

The authority having jurisdiction (not the USGS), site-specific geotechnical data, and/or the default has classified the site class as Site Class , based on the site soil properties in accordance with Chapter 20.

Table 20.3-1 Site Classification

Site Class	$\bar{v}_s$	$\bar{N}$ or $\bar{N}_{ch}$	$\bar{s}_u$
A. Hard Rock	>5,000 ft/s	N/A	N/A
B. Rock	2,500 to 5,000 ft/s	N/A	N/A
C. Very dense soil and soft rock	1,200 to 2,500 ft/s	>50	>2,000 psf
D. Stiff Soil	600 to 1,200 ft/s	15 to 50	1,000 to 2,000 psf
E. Soft clay soil	<600 ft/s	<15	<1,000 psf
	Any profile with more than 10 ft of soil having the characteristics: • Plasticity index PI > 20 • Moisture content w ≥ 40%, and • Undrained shear strength $\bar{s}_u$ < 500 psf		
F. Soils requiring site response analysis in accordance with Section 21.1	See Section 20.3.1		
For SI: 1ft/s = 0.3048 m/s 1lb/ft^2 = 0.0479 kN/m^2			

Location 2

Site Coefficients and Risk-Targeted Maximum Considered Earthquake (MCE_R) Spectral Response Acceleration Parameters

Risk-targeted Ground Motion (0.2 s)

$C_{RS}S_{SUH} = 0.947 \times 0.375 = 0.355$ g

Deterministic Ground Motion (0.2 s)

$S_{SD} = 1.500$ g

$S_S \equiv$ "Lesser of $C_{RS}S_{SUH}$ and S_{SD}" = 0.355 g

Risk-targeted Ground Motion (1.0 s)

$C_{R1}S_{1UH} = 0.948 \times 0.119 = 0.113$ g

Deterministic Ground Motion (1.0 s)

$S_{1D} = 0.600$ g

$S_1 \equiv$ "Lesser of $C_{R1}S_{1UH}$ and S_{1D}" = 0.113 g

Table 11.4-1: Site Coefficient F_a

Site Class	Spectral Reponse Acceleration Parameter at Short Period					
	$S_S \leq 0.25$	$S_S = 0.50$	$S_S = 0.75$	$S_S = 1.00$	$S_S = 1.25$	$S_S \geq 1.50$
A	0.8	0.8	0.8	0.8	0.8	0.8
B (measured)	0.9	0.9	0.9	0.9	0.9	0.9
B (unmeasured)	1.0	1.0	1.0	1.0	1.0	1.0
C	1.3	1.3	1.2	1.2	1.2	1.2
D (determined)	1.6	1.4	1.2	1.1	1.0	1.0
D (default)	1.6	1.4	1.2	1.2	1.2	1.2
E	2.4	1.7	1.3	1.2 *	1.2 *	1.2 *
F	See Section 11.4.7					

* For Site Class E and $S_S \geq 1.0$ g, see the requirements for site-specific ground motions in Section 11.4.7 of the 2015 NEHRP Provisions. Here the exception to those requirements allowing F_a to be taken as equal to that of Site Class C has been invoked.

Note: Use straight-line interpolation for intermediate values of S_S.

Location 2

Note: Where Site Class B is selected, but site-specific velocity measurements are not made, the value of F_a shall be taken as 1.0 per Section 11.4.2.

Note: Where Site Class D is selected as the default site class per Section 11.4.2, the value of F_a shall not be less than 1.2 per Section 11.4.3.

For Site Class = C and S_s = 0.355 g, F_a = 1.300

Location 2

Table 11.4-2: Site Coefficient F_v

Site Class	Spectral Response Acceleration Parameter at 1-Second Period					
	$S_1 \leq 0.10$	$S_1 = 0.20$	$S_1 = 0.30$	$S_1 = 0.40$	$S_1 = 0.50$	$S_1 \geq 0.60$
A	0.8	0.8	0.8	0.8	0.8	0.8
B (measured)	0.8	0.8	0.8	0.8	0.8	0.8
B (unmeasured)	1.0	1.0	1.0	1.0	1.0	1.0
C	1.5	1.5	1.5	1.5	1.5	1.4
D (determined)	2.4	2.2 [1]	2.0 [1]	1.9 [1]	1.8 [1]	1.7 [1]
D (default)	2.4	2.2 [1]	2.0 [1]	1.9 [1]	1.8 [1]	1.7 [1]
E	4.2	3.3 [1]	2.8 [1]	2.4 [1]	2.2 [1]	2.0 [1]
F	See Section 11.4.7					

[1] For Site Class D or E and $S_1 \geq 0.2$ g, site-specific ground motions might be required. See Section 11.4.7 of the 2015 NEHRP Provisions.

Note: Use straight-line interpolation for intermediate values of S_1.

Note: Where Site Class B is selected, but site-specific velocity measurements are not made, the value of F_v shall be taken as 1.0 per Section 11.4.2.

For Site Class = C and S_1 = 0.113 g, F_v = 1.500

Site-adjusted MCE_R (0.2 s)

$$S_{MS} = F_a S_S = 1.300 \times 0.355 = 0.462 \text{ g}$$

Site-adjusted MCE_R (1.0 s)

$$S_{M1} = F_v S_1 = 1.500 \times 0.113 = 0.169 \text{ g}$$

Location 2

Design Spectral Acceleration Parameters

Design Ground Motion (0.2 s)

$$S_{DS} = \frac{2}{3} S_{MS} = \frac{2}{3} \times 0.462 = 0.308 \text{ g}$$

Design Ground Motion (1.0 s)

$$S_{D1} = \frac{2}{3} S_{M1} = \frac{2}{3} \times 0.169 = 0.113 \text{ g}$$

Location 2

Design Response Spectrum

Long-Period Transition Period = T_L = 8 s

Figure 11.4-1: Design Response Spectrum

Location 2

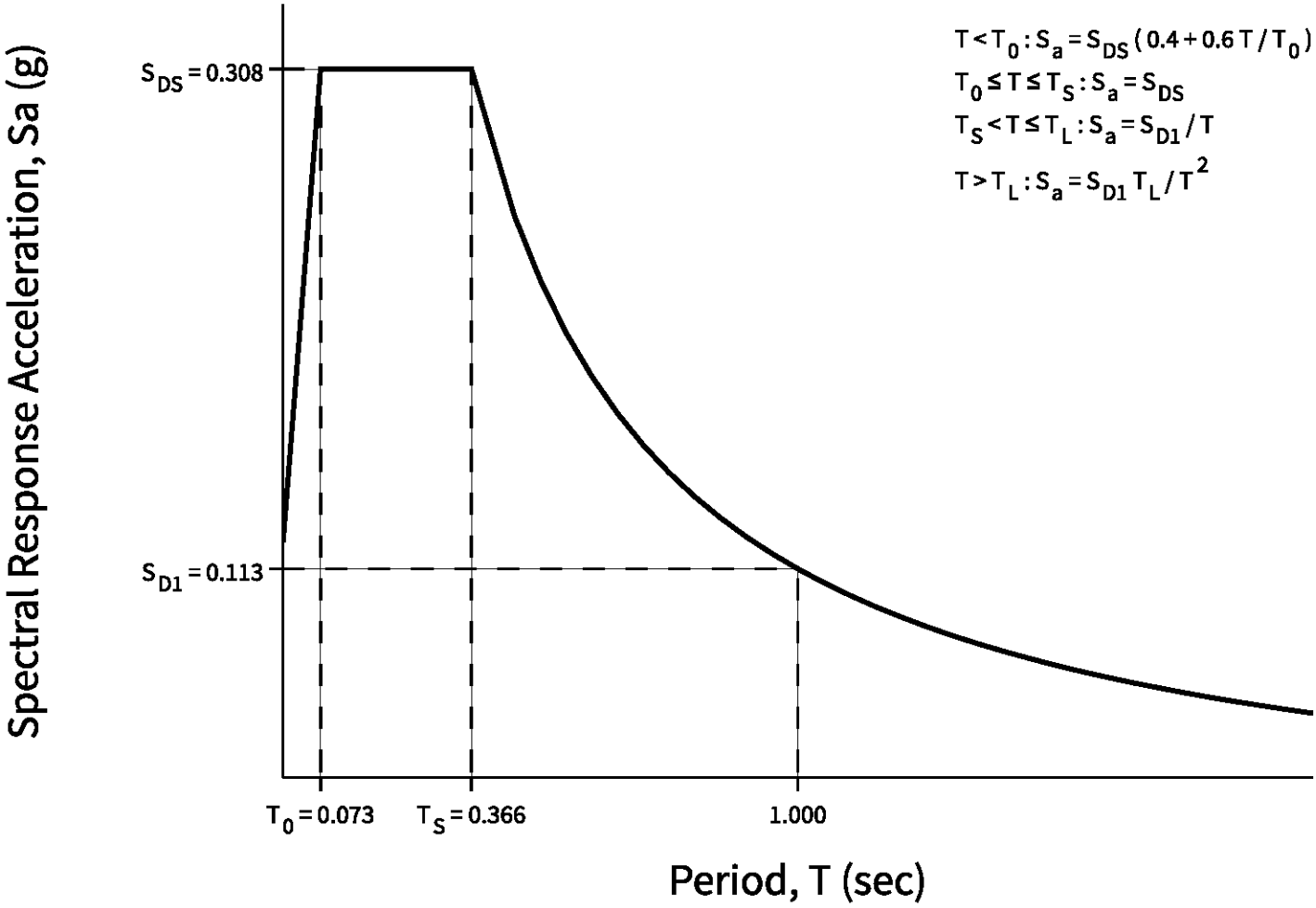
Spectral Response Acceleration, Sa (g)
$S_{DS} = 0.308$
$S_{D1} = 0.113$
$T < T_0 : S_a = S_{DS}(0.4 + 0.6T/T_0)$
$T_0 \le T \le T_S : S_a = S_{DS}$
$T_S < T \le T_L : S_a = S_{D1}/T$
$T > T_L : S_a = S_{D1}T_L/T^2$
$T_0 = 0.073$
$T_S = 0.366$
1.000
Period, T (sec)

Location 2

MCE_R Response Spectrum

The MCE_R response spectrum is determined by multiplying the design response spectrum above by 1.5.

Location 2

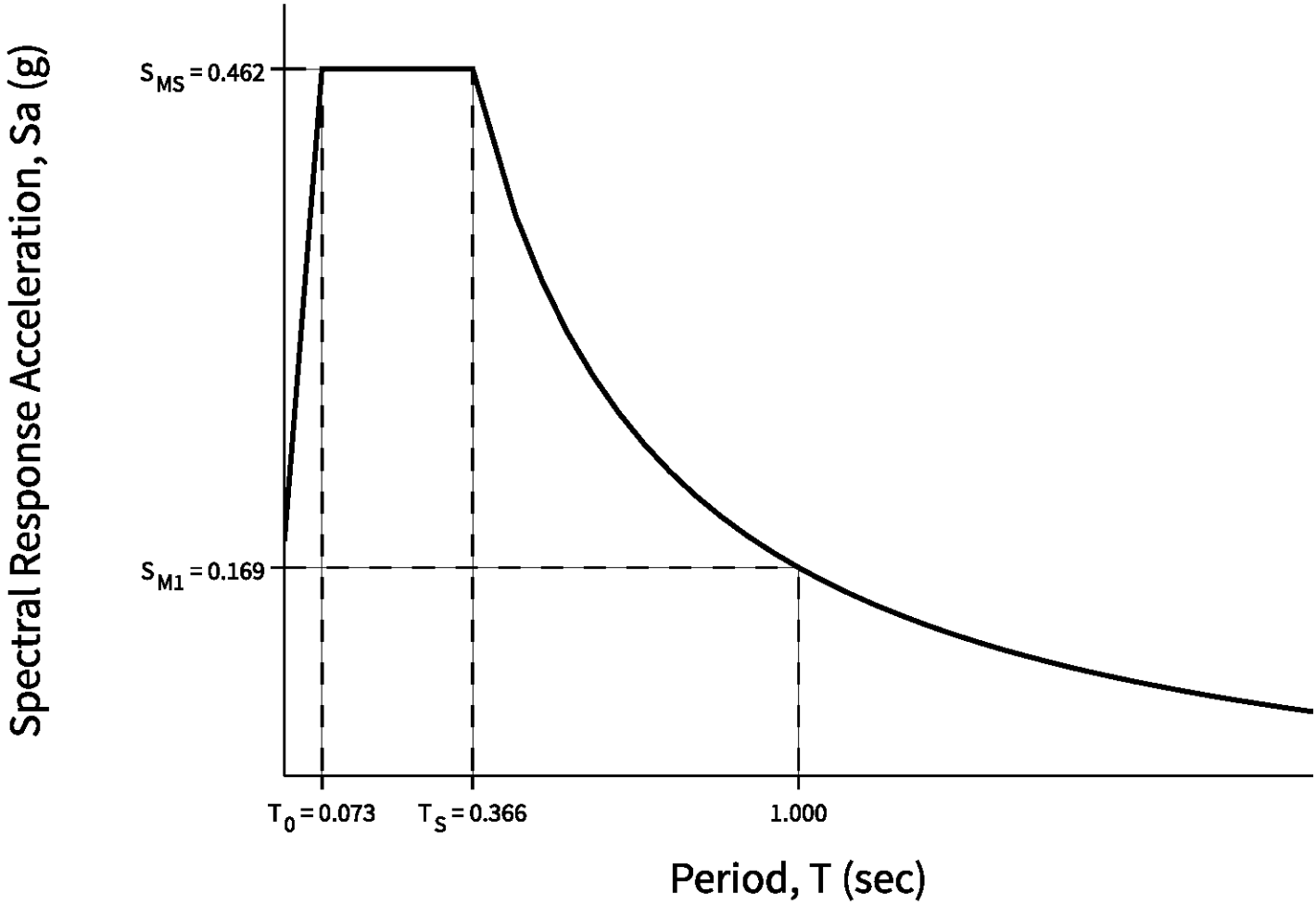
Spectral Response Acceleration, Sa (g)
S_{MS} = 0.462
S_{M1} = 0.169
T_0 = 0.073
T_S = 0.366
1.000
Period, T (sec)

Location 2

Additional Geotechnical Investigation Report Requirements for Seismic Design Categories D through F

Table 11.8-1: Site Coefficient for F_{PGA}

Site Class	Mapped MCE Geometric Mean (MCE_G) Peak Ground Acceleration					
	PGA ≤ 0.10	PGA = 0.20	PGA = 0.30	PGA = 0.40	PGA = 0.50	PGA ≥ 0.60
A	0.8	0.8	0.8	0.8	0.8	0.8
B (measured)	0.9	0.9	0.9	0.9	0.9	0.9
B (unmeasured)	1.0	1.0	1.0	1.0	1.0	1.0
C	1.3	1.2	1.2	1.2	1.2	1.2
D (determined)	1.6	1.4	1.3	1.2	1.1	1.1
D (default)	1.6	1.4	1.3	1.2	1.2	1.2
E	2.4	1.9	1.6	1.4	1.2	1.1
F	See Section 11.4.7					

Note: Use straight-line interpolation for intermediate values of PGA

Note: Where Site Class D is selected as the default site class per Section 11.4.2, the value of F_{pga} shall not be less than 1.2.

For Site Class = C and PGA = 0.193 g, F_{PGA} = 1.207

Mapped MCE_G

$PGA = 0.193$ g

Site-adjusted MCE_G

$PGA_M = F_{PGA}PGA = 1.207 \times 0.193 = 0.233$ g

Location 2

Location 2

PSH Deaggregation on NEHRP BC rock
Location_3 109.638º W, 42.604 N.

SA period 0.20 sec. Accel.>=0.4124 g
Ann. Exceedance Rate .201E-03. Mean Return Time 4975 yrs
Mean (R,M,ε_0) 36.7 km,5.92, 0.56
Modal (R,M,ε_0) = 15.5 km, 5.03, 0.56 (from peak R,M bin)
Modal (R,M,ε*) = 17.0 km, 5.03, 1 to 2 sigma (from peak R,M,ε bin)
Binning: DeltaR=25. km, deltaM=0.2, Deltaε=1.0

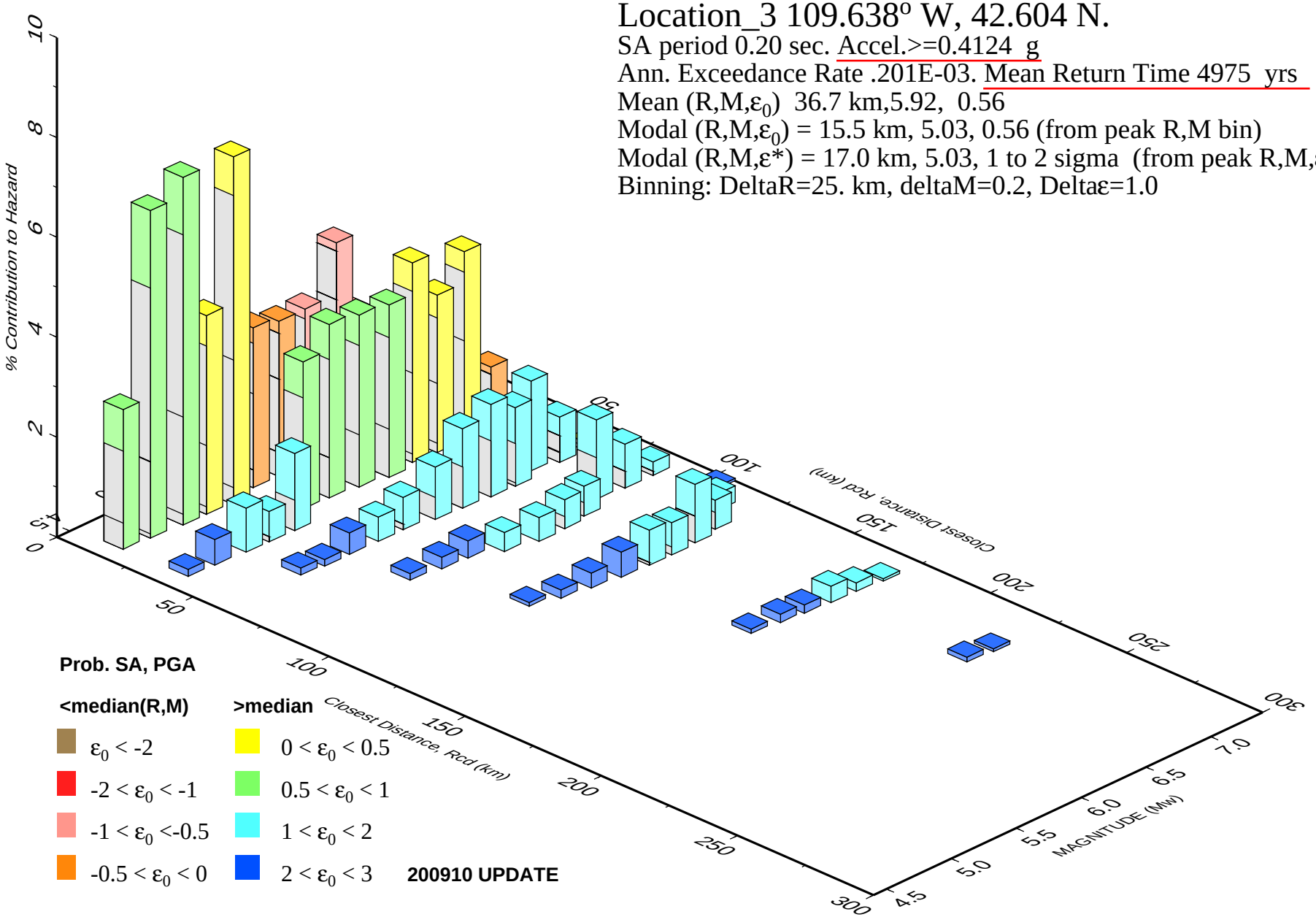

Location 3

GMT 2017 Jan 5 14:45:13 **Distance (R), magnitude (M), epsilon (E0,E) deaggregation for a site on rock with average vs= 760. m/s top 30 m. USGS CGHT PSHA2008 UPDATE Bins with lt 0.05% contrib. omitted**

PSH Deaggregation on NEHRP BC rock
Location_3 109.638º W, 42.604 N.

SA period 0.20 sec. Accel.>=0.2990 g
Ann. Exceedance Rate .397E-03. Mean Return Time 2475 yrs
Mean (R,M,ε_0) 48.1 km,5.97, 0.62
Modal (R,M,ε_0) = 16.7 km, 5.03, 0.27 (from peak R,M bin)
Modal (R,M,ε*) = 17.9 km, 4.80, 1 to 2 sigma (from peak R,M,ε bin)
Binning: DeltaR=25. km, deltaM=0.2, Deltaε=1.0

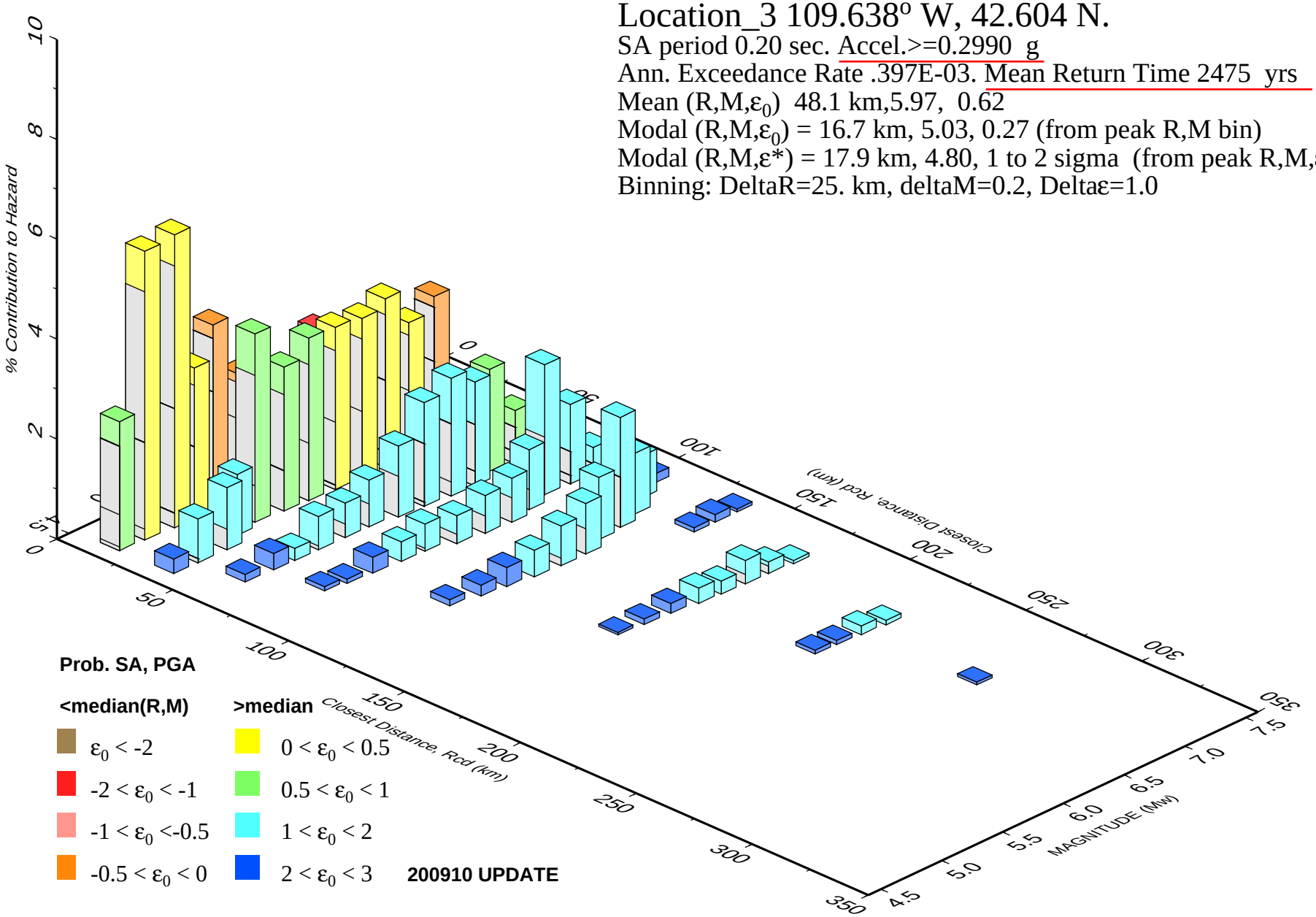

Location 3

GMT 2017 Jan 5 14:40:39 **Distance (R), magnitude (M), epsilon (E0,E) deaggregation for a site on rock with average vs= 760. m/s top 30 m. USGS CGHT PSHA2008 UPDATE Bins with lt 0.05% contrib. omitted**

U.S. Geological Survey - Earthquake Hazards Program

Location 3: Intersection of WY-351 and US-191_2014

Latitude = 42.603°N, Longitude = 109.638°W

Location

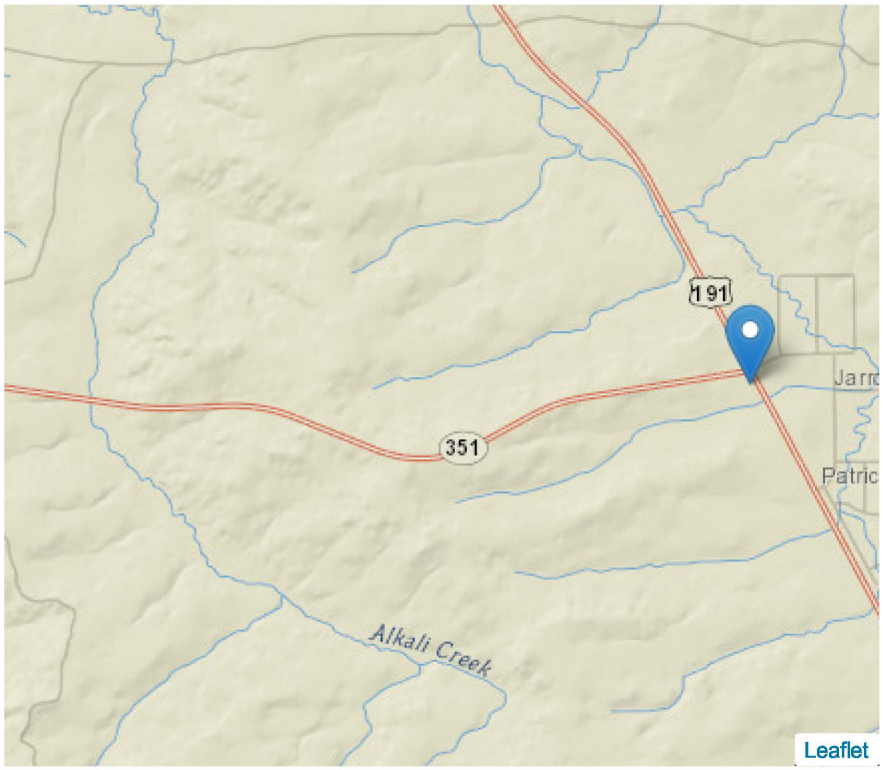

Reference Document

2015 NEHRP Provisions

Site Class

C: Very Dense Soil and Soft Rock

Risk Category

IV e.g. (Essential Facilities)

S_S =	0.338 g	S_{MS} =	0.440 g	S_{DS} =	0.293 g
S_1 =	0.106 g	S_{M1} =	0.159 g	S_{D1} =	0.106 g

Location 3

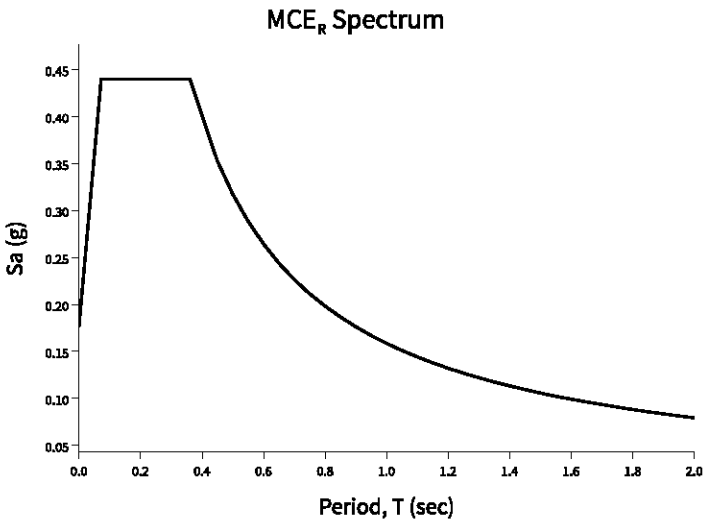
MCE$_R$ Spectrum
Sa (g)
0.45
0.40
0.35
0.30
0.25
0.20
0.15
0.10
0.05
0.0
0.2
0.4
0.6
0.8
1.0
1.2
1.4
1.6
1.8
2.0
Period, T (sec)

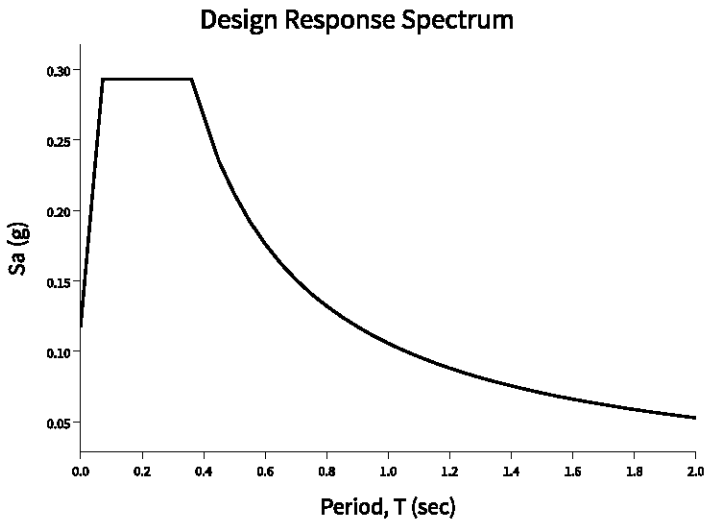
Design Response Spectrum
Sa (g)
0.30
0.25
0.20
0.15
0.10
0.05
0.0
0.2
0.4
0.6
0.8
1.0
1.2
1.4
1.6
1.8
2.0
Period, T (sec)

Location 3

Mapped Acceleration Parameters, Long-Period Transition Periods, and Risk Coefficients

Note: The S_S and S_1 ground motion maps provided below are for the direction of maximmum horizontal spectral response acceleration. They have been converted from corresponding geometric mean ground motions computed by the USGS by applying factors of 1.1 (to obtain S_S) 1.3 (to obtain S_1).

- FIGURE 22-1 S_S Risk-Targeted Maximum Considered Earthquake (MCE_R) Ground Motion Parameter for the Conterminous United States for 0.2 s Spectral Response Acceleration (5% of Critical Damping), Site Class B
- FIGURE 22-2 S_1 Risk-Targeted Maximum Considered Earthquake (MCE_R) Ground Motion Parameter for the Conterminous United States for 1.0 s Spectral Response Acceleration (5% of Critical Damping), Site Class B
- FIGURE 22-9 Maximum Considered Earthquake Geometric Mean (MCE_G) PGA, %g, Site Class B for the Conterminous United States
- FIGURE 22-14 Mapped Long-Period Transition Period, T_L (s), for the Conterminous United States
- FIGURE 22-18 Mapped Risk Coefficient at 0.2 s Spectral Response Period, C_{RS}
- FIGURE 22-19 Mapped Risk Coefficient at 1.0 s Spectral Response Period, C_{R1}

Location 3

Site Class

The authority having jurisdiction (not the USGS), site-specific geotechnical data, and/or the default has classified the site class as Site Class , based on the site soil properties in accordance with Chapter 20.

Table 20.3-1 Site Classification

Site Class	$\bar{v}_s$	$\bar{N}$ or $\bar{N}_{ch}$	$\bar{s}_u$
A. Hard Rock	>5,000 ft/s	N/A	N/A
B. Rock	2,500 to 5,000 ft/s	N/A	N/A
C. Very dense soil and soft rock	1,200 to 2,500 ft/s	>50	>2,000 psf
D. Stiff Soil	600 to 1,200 ft/s	15 to 50	1,000 to 2,000 psf
E. Soft clay soil	<600 ft/s	<15	<1,000 psf
	Any profile with more than 10 ft of soil having the characteristics: • Plasticity index PI > 20 • Moisture content w ≥ 40%, and • Undrained shear strength $\bar{s}_u$ < 500 psf		
F. Soils requiring site response analysis in accordance with Section 21.1	See Section 20.3.1		
For SI: 1ft/s = 0.3048 m/s 1lb/ft^2 = 0.0479 kN/m^2			

Location 3

Site Coefficients and Risk-Targeted Maximum Considered Earthquake (MCE_R) Spectral Response Acceleration Parameters

Risk-targeted Ground Motion (0.2 s)

$C_{RS}S_{SUH} = 0.950 \times 0.356 = 0.338$ g

Deterministic Ground Motion (0.2 s)

$S_{SD} = 1.500$ g

$S_S \equiv$ "Lesser of $C_{RS}S_{SUH}$ and S_{SD}" = 0.338 g

Risk-targeted Ground Motion (1.0 s)

$C_{R1}S_{1UH} = 0.950 \times 0.111 = 0.106$ g

Deterministic Ground Motion (1.0 s)

$S_{1D} = 0.600$ g

$S_1 \equiv$ "Lesser of $C_{R1}S_{1UH}$ and S_{1D}" = 0.106 g

Table 11.4-1: Site Coefficient F_a

Site Class	Spectral Reponse Acceleration Parameter at Short Period					
	$S_S \leq 0.25$	$S_S = 0.50$	$S_S = 0.75$	$S_S = 1.00$	$S_S = 1.25$	$S_S \geq 1.50$
A	0.8	0.8	0.8	0.8	0.8	0.8
B (measured)	0.9	0.9	0.9	0.9	0.9	0.9
B (unmeasured)	1.0	1.0	1.0	1.0	1.0	1.0
C	1.3	1.3	1.2	1.2	1.2	1.2
D (determined)	1.6	1.4	1.2	1.1	1.0	1.0
D (default)	1.6	1.4	1.2	1.2	1.2	1.2
E	2.4	1.7	1.3	1.2 *	1.2 *	1.2 *
F	See Section 11.4.7					

* For Site Class E and $S_S \geq 1.0$ g, see the requirements for site-specific ground motions in Section 11.4.7 of the 2015 NEHRP Provisions. Here the exception to those requirements allowing F_a to be taken as equal to that of Site Class C has been invoked.

Note: Use straight-line interpolation for intermediate values of S_S.

Location 3

Note: Where Site Class B is selected, but site-specific velocity measurements are not made, the value of F_a shall be taken as 1.0 per Section 11.4.2.

Note: Where Site Class D is selected as the default site class per Section 11.4.2, the value of F_a shall not be less than 1.2 per Section 11.4.3.

For Site Class = C and S_s = 0.338 g, F_a = 1.300

Location 3

Table 11.4-2: Site Coefficient F_v

Site Class	Spectral Response Acceleration Parameter at 1-Second Period					
	$S_1 \leq 0.10$	$S_1 = 0.20$	$S_1 = 0.30$	$S_1 = 0.40$	$S_1 = 0.50$	$S_1 \geq 0.60$
A	0.8	0.8	0.8	0.8	0.8	0.8
B (measured)	0.8	0.8	0.8	0.8	0.8	0.8
B (unmeasured)	1.0	1.0	1.0	1.0	1.0	1.0
C	1.5	1.5	1.5	1.5	1.5	1.4
D (determined)	2.4	2.2 [1]	2.0 [1]	1.9 [1]	1.8 [1]	1.7 [1]
D (default)	2.4	2.2 [1]	2.0 [1]	1.9 [1]	1.8 [1]	1.7 [1]
E	4.2	3.3 [1]	2.8 [1]	2.4 [1]	2.2 [1]	2.0 [1]
F	See Section 11.4.7					

[1] For Site Class D or E and $S_1 \geq 0.2$ g, site-specific ground motions might be required. See Section 11.4.7 of the 2015 NEHRP Provisions.

Note: Use straight-line interpolation for intermediate values of S_1.

Note: Where Site Class B is selected, but site-specific velocity measurements are not made, the value of F_v shall be taken as 1.0 per Section 11.4.2.

For Site Class = C and S_1 = 0.106 g, F_v = 1.500

Site-adjusted MCE_R (0.2 s)

$$S_{MS} = F_a S_S = 1.300 \times 0.338 = 0.440 \text{ g}$$

Site-adjusted MCE_R (1.0 s)

$$S_{M1} = F_v S_1 = 1.500 \times 0.106 = 0.159 \text{ g}$$

Location 3

Design Spectral Acceleration Parameters

Design Ground Motion (0.2 s)

$$S_{DS} = \frac{2}{3} S_{MS} = \frac{2}{3} \times 0.440 = 0.293 \text{ g}$$

Design Ground Motion (1.0 s)

$$S_{D1} = \frac{2}{3} S_{M1} = \frac{2}{3} \times 0.159 = 0.106 \text{ g}$$

Location 3

Design Response Spectrum

Long-Period Transition Period = T_L = 6 s

Figure 11.4-1: Design Response Spectrum

Location 3

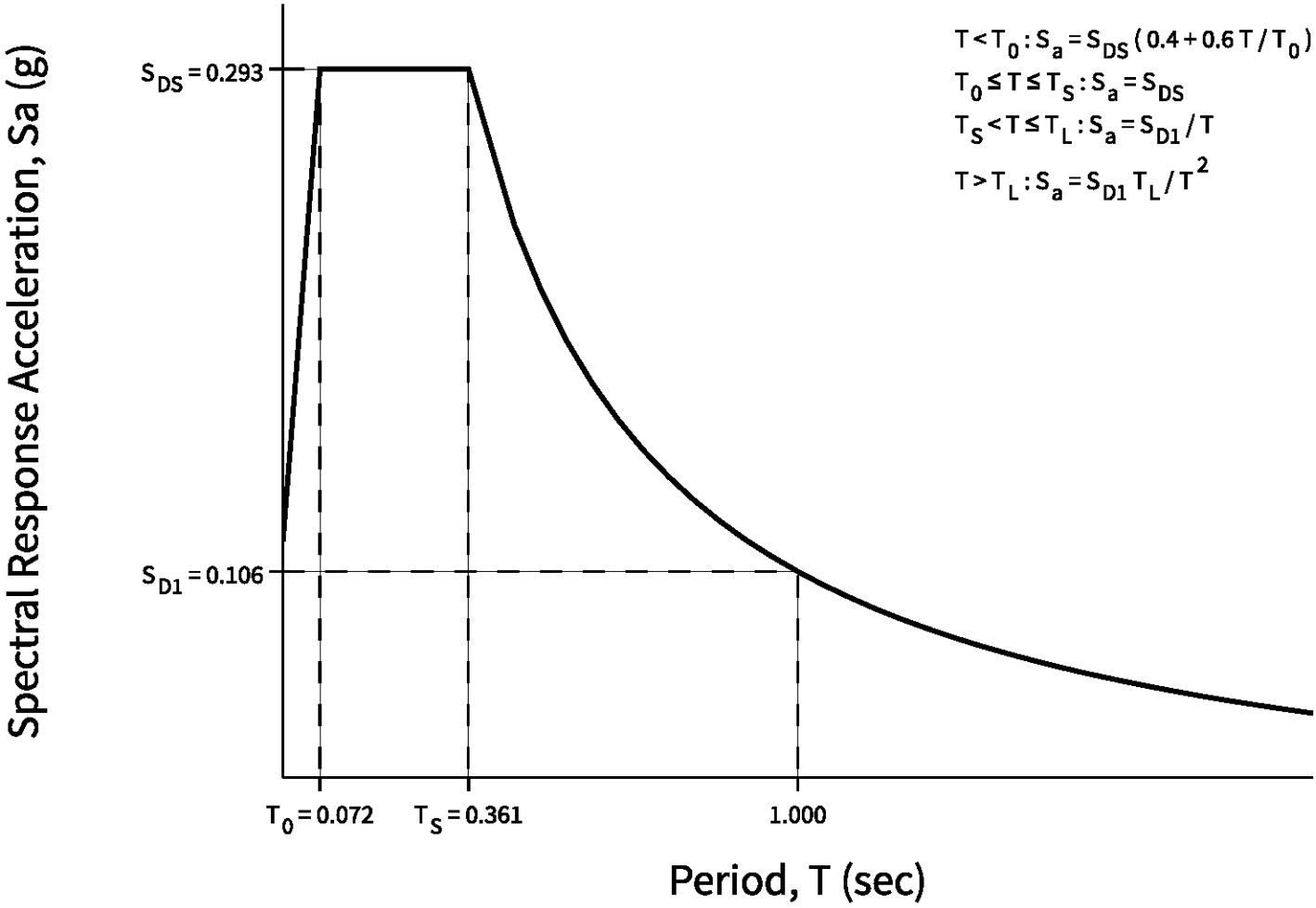
Spectral Response Acceleration, Sa (g)
$S_{DS} = 0.293$
$S_{D1} = 0.106$
$T < T_0 : S_a = S_{DS}(0.4 + 0.6T/T_0)$
$T_0 \le T \le T_S : S_a = S_{DS}$
$T_S < T \le T_L : S_a = S_{D1}/T$
$T > T_L : S_a = S_{D1}T_L/T^2$
$T_0 = 0.072$
$T_S = 0.361$
1.000
Period, T (sec)

Location 3

MCE_R Response Spectrum

The MCE_R response spectrum is determined by multiplying the design response spectrum above by 1.5.

Location 3

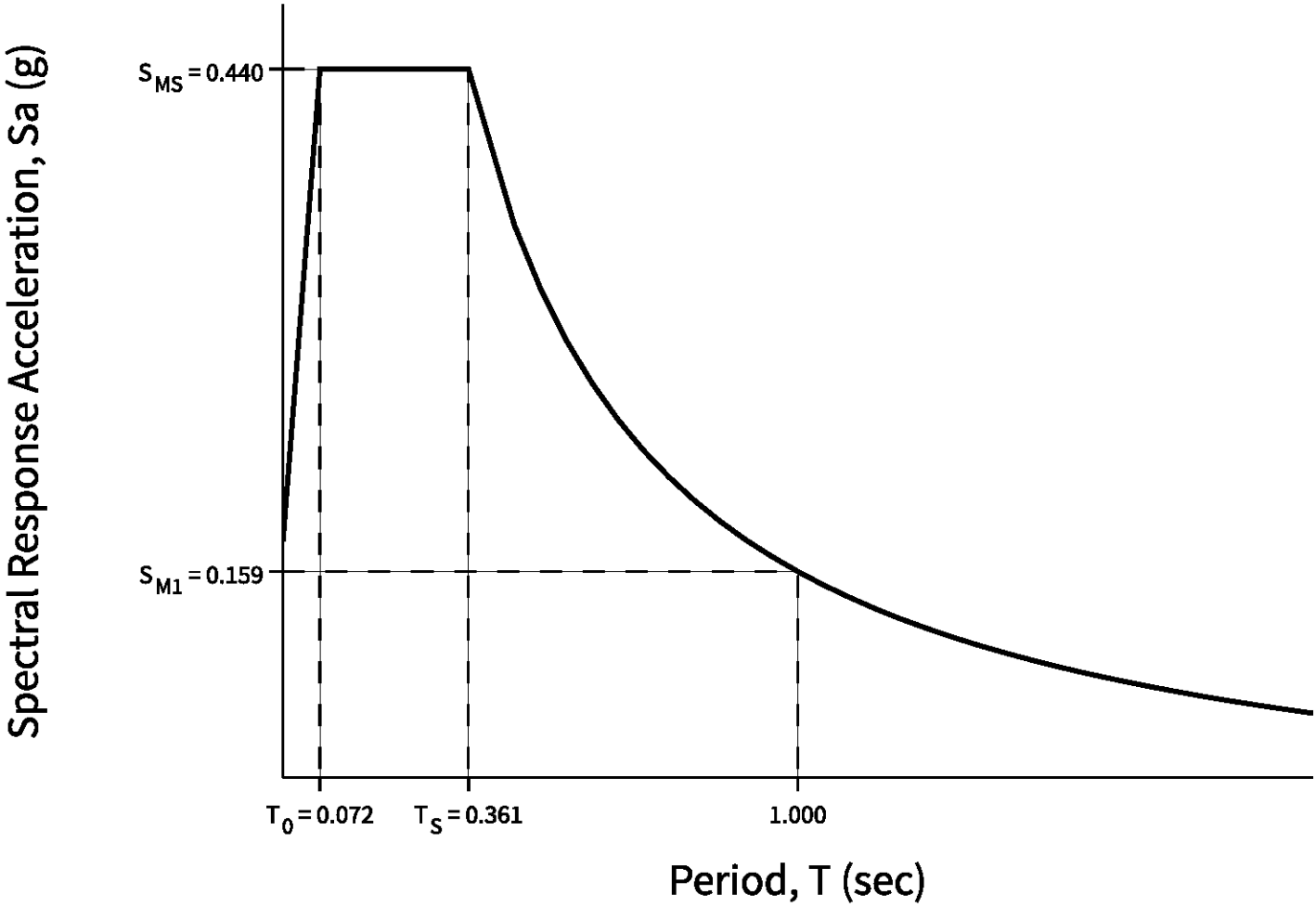
Spectral Response Acceleration, Sa (g)
S_{MS} = 0.440
S_{M1} = 0.159
T_0 = 0.072
T_S = 0.361
1.000
Period, T (sec)

Location 3

Additional Geotechnical Investigation Report Requirements for Seismic Design Categories D through F

Table 11.8-1: Site Coefficient for F_{PGA}

Site Class	Mapped MCE Geometric Mean (MCE_G) Peak Ground Acceleration					
	PGA ≤ 0.10	PGA = 0.20	PGA = 0.30	PGA = 0.40	PGA = 0.50	PGA ≥ 0.60
A	0.8	0.8	0.8	0.8	0.8	0.8
B (measured)	0.9	0.9	0.9	0.9	0.9	0.9
B (unmeasured)	1.0	1.0	1.0	1.0	1.0	1.0
C	1.3	1.2	1.2	1.2	1.2	1.2
D (determined)	1.6	1.4	1.3	1.2	1.1	1.1
D (default)	1.6	1.4	1.3	1.2	1.2	1.2
E	2.4	1.9	1.6	1.4	1.2	1.1
F	See Section 11.4.7					

Note: Use straight-line interpolation for intermediate values of PGA

Note: Where Site Class D is selected as the default site class per Section 11.4.2, the value of F_{pga} shall not be less than 1.2.

For Site Class = C and PGA = 0.189 g, F_{PGA} = 1.211

Mapped MCE_G

$PGA = 0.189$ g

Site-adjusted MCE_G

$PGA_M = F_{PGA}PGA = 1.211 \times 0.189 = 0.229$ g

Location 3

Location 3

ATTACHMENT B

NRCS SOIL GROUPS

Attachment B - NRCS Soil Groups

Soil Group Number	Soil Group Name
1101	Thibadeau-Lauzer-Zealot complex, 0 to 4 percent slopes
1104	Soapole-Soapy complex, 0 to 4 percent slopes
1105	Foxcreek-Rendezvous complex, 0 to 2 percent slopes
1109	Meaver mucky peat, 0 to 4 percent slopes
1112	Furniss mucky peat, 0 to 3 percent slopes
1114	Overwhich, occasionally flooded-Overwhich, rarely flooded complex, 0 to 2 percent slopes
1115	Furniss-Foxcreek complex, 0 to 2 percent slopes
1204	Foolhen-Kilgore-Toddhole, extremely bouldery complex, 1 to 4 percent slopes
1205	Jurvannah complex, 0 to 2 percent slopes
1206	Argic Cryaquolls-Lemhi complex, 0 to 4 percent slopes
1209	Novary-Haygulch complex, 0 to 2 percent slopes
1701	Alpine Cirques, Rock Outcrop-Tundra-Willow Complex
1801	Alpine Ridges, Rubble Land-Tundra Complex
2101	Gunsone-Mountairy complex, 0 to 4 percent slopes
2106	Jemdilon gravelly loam, 1 to 4 percent slopes
2107	Dillon clay loam, 0 to 2 percent slopes
2112	Dillon loam, 0 to 2 percent slopes
2113	Turson clay loam, 0 to 2 percent slopes
2114	Alex-Mooseflat complex, 0 to 2 percent slopes
2115	Turson-Rendezvous complex, 0 to 2 percent slopes
2116	Horsegrass mucky peat, 0 to 2 percent slopes
2117	Leckie-Overwhich complex, 0 to 3 percent slopes
2121	Raghorn sandy loam, 0 to 3 percent slopes
2122	Sandflat-Pitchstone complex, 0 to 2 percent slopes
2202	Lauzer-Zealot-Mountairy complex, 0 to 4 percent slopes
2203	Bonhigh-Figuorsand, family-Cusheet complex, 0 to 4 percent slopes
2205	Raghigh-Cacklin-Glendive complex, 0 to 4 percent slopes
2211	Geohrock gravelly sandy loam, 1 to 4 percent slopes
2213	Kayso loamy sand, 0 to 4 percent slopes
2214	Jemdilon fine sandy loam, 0 to 4 percent slopes
2215	Zealot-Lauzer complex, 1 to 6 percent slopes
2216	Lauzer-Trudau complex, 1 to 8 percent slopes
2217	Jedsteer-Natherman complex, 2 to 6 percent slopes
2218	Natherman fine sandy loam, 0 to 4 percent slopes
2219	Toddcan mucky peat, 0 to 2 percent slopes
2222	Voldseth sandy loam, 0 to 4 percent slopes
2223	Lauzer-Fogarty complex, 1 to 8 percent slopes
2224	Wallrock loam, 1 to 4 percent slopes
2226	Coyoteflats loam, 1 to 4 percent slopes
2227	Webbville loam, 1 to 3 percent slopes
2228	Canditch-Levarge complex, 1 to 3 percent slopes
2236	Beavet-Beavoe complex, 1 to 4 percent slopes
2240	Raghorn coarse sandy loam, 0 to 4 percent slopes
2305	Pitchstone-Sandflat complex, 2 to 8 percent slopes
2310	Taffom-Squaretop complex, 1 to 6 percent slopes
2315	Natherman sandy loam, 4 to 8 percent slopes
2344	Subsummit Moraines, Subalpine Fir Complex
2345	Subsummit Moraines, Spruce/Fir-Whitebark Pine-Meadow Complex
2346	Subsummit Moraines, Subalpine Fir-Meadow Complex
2351	Subsummit Moraines, Meadow-Grassland Complex
2401	Subsummit Uplands, Rock Outcrop-Tundra-Willow Complex
2441	Subsummit Uplands, Spruce/Fir-Rock Outcrop Complex
2442	Subsummit Uplands, Subalpine Fir-Rock Outcrop Complex
2443	Subsummit Uplands, Spruce/Fir-Willow-Rock Outcrop Complex
2461	Subsummit Uplands, Tundra-Willow-Rock Outcrop Complex
2511	Subsummit Bottoms, Willow-Meadow Complex
2601	Subsummit Sideslopes, Rock Outcrop-Whitebark Pine-Spruce/Fir Complex
2602	Subsummit Sideslopes, Rock Outcrop-Whitebark Pine-Subalpine Fir Complex

Soil Group Number	Soil Group Name
2641	Subsummit Sideslopes, Spruce/Fir Complex
2642	Subsummit Sideslopes, Subalpine Fir Complex
2861	Subsummit Ridges, Rubble Land-Tundra Complex
3201	Blaha-Jaycox complex, 0 to 4 percent slopes
3202	Brushfire-Gelkie-Reinecker complex, 0 to 4 percent slopes
3203	Brushfire-Tomichi-Tine complex, 0 to 6 percent slopes
3205	Muddybench-Wilhelm complex, 1 to 6 percent slopes
3303	Berlake-Braziel, very bouldery complex, 1 to 8 percent slopes
3401	Bowen-Kezar-Pineisle complex, 2 to 15 percent slopes, extremely bouldery
3402	Millerlake-Burnt Lake-Igor, rubbly complex, 2 to 15 percent slopes
3403	Fortyrod, extremely stony-Fortyrod, extremely bouldery complex, 2 to 12 percent slopes
3404	Jaycox-Burtswell complex, 2 to 12 percent slopes
3405	Jerry-Conwaycreek complex, 4 to 20 percent slopes
3406	Onionspring-Brodie, very stony complex, 2 to 15 percent slopes
3501	Pinedale, very bouldery-Noclios, extremely bouldery complex, 4 to 20 percent slopes
3502	Warrow-Youga-Bigrant, very bouldery complex, 1 to 25 percent slopes
3601	Pointer, rubbly-Willsod, extremely bouldery complex, 2 to 20 percent slopes
3603	Youga-Warrow, rubbly complex, 4 to 25 percent slopes
3604	Tine-Dailybasin complex, 4 to 25 percent slopes
3605	Lolon-Lateral, extremely bouldery-Taglake, extremely bouldery complex, 4 to 30 percent slopes
3701	Pointer-Lateral complex, 12 to 60 percent slopes, extremely bouldery
4111	Mountain Front Floodplains, Meadow-Willow-Silver Sagebrush Complex
4201	Cusheet-Roto complex, 2 to 6 percent slopes
4341	Mountain Front Moraines, Subalpine Fir Complex
4342	Mountain Front Moraines (North), Subalpine Fir Complex
4343	Mountain Front Moraines, Subalpine Fir-Aspen-Big Sagebrush Complex
4511	Mountain Front Bottoms, Meadow-Willow Complex
4602	Buddsoft very gravelly fine sandy loam, 15 to 60 percent slopes, extremely stony
4621	Mountain Front Sideslopes, Big Sagebrush-Subalpine Fir Complex
4631	Mountain Front Sideslopes, Aspen-Big Sagebrush Complex
4641	Mountain Front Sideslopes, Subalpine Fir-Aspen Complex
4642	Mountain Front Till-Mantled Sideslopes (North), Subalpine Fir Complex
4643	Mountain Front Colluvial Sideslopes (North), Subalpine Fir Complex
4644	Mountain Front Colluvial Sideslopes (South), Subalpine Fir Complex
4645	Mountain Front Till-Mantled Sideslopes (South), Subalpine Fir Complex
4702	Lacreek-Nathrop-Coalkiln, extremely stony complex, 30 to 75 percent slopes
5203	Golphco-Chickenhill-Bronec complex, 1 to 6 percent slopes
5303	Bonhigh-Golphco complex, 1 to 6 percent slopes
5313	Squaretop-Bonhigh-Foreright complex, 2 to 8 percent slopes
5325	Yetull-Figuore complex, 1 to 10 percent slopes
5326	Cortyzack-Ryedraw complex, 2 to 15 percent slopes
5337	Raghorn sandy loam, 4 to 8 percent slopes
5402	Bluemod-Zagplat-Hoofer complex, 1 to 10 percent slopes
5405	Bluemod-Figuorsand-Foreright complex, 1 to 8 percent slopes
5409	Yodlow-Forelle-Warfman complex, 1 to 10 percent slopes
5417	Badland-Bonhigh complex, 2 to 20 percent slopes
5418	Golphco-Mountairy complex, 4 to 15 percent slopes
5419	Jemdilon-Foresand-Buddsoft complex, 2 to 15 percent slopes
5426	Chickenhill-Rosseau complex, 2 to 15 percent slopes
5437	Broback-Golphco-Foreleft complex, 5 to 15 percent slopes
5501	Volborg-Oysterridge-Oysterridge complex, 4 to 15 percent slopes
5507	Bonhigh-Cacmod complex, 1 to 10 percent slopes
5518	Golphco-Broback complex, 4 to 25 percent slopes
5519	Jemdilon-Rosseau-Twinadams family complex, 4 to 25 percent slopes
5520	Conwaycreek-Calpet-Inabnit complex, 8 to 30 percent slopes
5528	Calsig-Kismetpeak complex, 10 to 35 percent slopes
5601	Hoofer-Badland-Bluemad-Zagplat complex, 4 to 25 percent slopes
5602	Foreright-Cusheet complex, 4 to 25 percent slopes
5606	Millerlake-Enochlake-Sledrunner complex, 4 to 25 percent slopes
5607	Foreright-Chinatown complex, 4 to 30 percent slopes

Soil Group Number	Soil Group Name
5608	Mountairy-Polaris-Figuorsand-Badland complex, 15 to 60 percent slopes
5609	Zealot-Ravenhole-Rallod complex, 4 to 25 percent slopes
5612	Brodie-Peaspear-Narrowridge complex, 6 to 25 percent slopes
5622	Jerry-Reedridge-Taylorspring complex, 15 to 50 percent slopes
5701	Glacial Trough Sideslopes, Forested Scree-Subalpine Fir Complex
5702	Glacial Trough Sideslopes, Rock Outcrop-Rubble Land-Subalpine Fir Complex
5703	Foursees-Badland complex, 8 to 45 percent slopes
5703BE(1)	Glacial Trough Sideslopes, Rock Outcrop-Douglas Fir Complex
5704	Craighigh-Rock outcrop complex, 15 to 60 percent slopes
5741	Glacial Trough Sideslopes, Subalpine Fir Complex
6111	Foothill Floodplains, Willow-Meadow Complex
6321	Foothill Till Plains, Big Sagebrush Complex
6322	Foothill Moraines, Big Sagebrush Complex
6331	Foothill Moraines, Aspen-Big Sagebrush Complex
6332	Foothill Moraines (Steep), Aspen-Big Sagebrush Complex
6333	Foothill Moraines, Aspen-Big Sagebrush-Douglas Fir Complex
6334	Foothill Moraines, Aspen-Big Sagebrush-Shrubby Cinquefoil Complex
6341	Foothill Moraines, Douglas fir Complex
6342	Foothill Moraines, Subalpine Fir Complex
6621	Foothill Sideslopes, Big Sagebrush-Aspen-Subalpine fir Complex
6631	Foothill Sideslopes, Aspen-Big Sagebrush Complex
7111	Southeast Mountains Floodplains, Willow-Meadow Complex
7112	Southeast Mountains Floodplains, Meadow Complex
7251	Southeast Mountains Terraces, Grassland
7331	Southeast Mountains Moraines, Aspen-Subalpine Fir Complex
7341	Southeast Mountains Till Plains, Subalpine Fir Complex
7342	Southeast Mountains Moraines, Subalpine Fir-Meadow Complex
7343	Southeast Mountains Moraines, Subalpine Fir Complex
7501	Worock-Jaegie-Swede complex, 6 to 25 percent slopes
7502	Blackbear, rubbly-Branham, rubbly-Bobowic complex, 4 to 25 percent slopes
7503	Ansel-Odark-Sebud, bouldery complex, 6 to 30 percent slopes
7511	Southeast Mountains Bottoms, Meadow Complex
7601	Norriston, rubbly-Ellena, extremely stony-Rock outcrop complex, 15 to 50 percent slopes
7602	Vanwirt, extremely bouldery-Ansel, extremely bouldery-Rock outcrop complex, 20 to 60 percent slopes
7602SU	Vanwirt, extremely bouldery-Ansel, extremely bouldery-Rock outcrop complex, 20 to 60 percent slopes
7603	Vanwirt, extremely bouldery-Rock outcrop-Lolon, extremely bouldery complex, 15 to 60 percent slopes
7620	Southeast Mountains Sideslopes, Big Sagebrush-Limber Pine Complex
7632	Southeast Mountains Sideslopes, Aspen-Big Sagebrush Complex
7641	Southeast Mountains Sideslopes, Douglas Fir-Rock Outcrop Complex
7642	Southeast Mountains Sideslopes, Subalpine Fir-Aspen Complex
7645	Southeast Mountains Sideslopes, Subalpine Fir-Aspen-Meadow Complex
7701	Rock outcrop-Surdal, extremely bouldery-Wix, extremely stony complex, 15 to 50 percent slopes
8002	Glaciers & Snowfields
8003	Rock Outcrop
8004	Rubble Land
9108	Whehigh silt loam, 0 to 2 percent slopes
9110	Harman clay loam, 0 to 4 percent slopes
9207	Cacklin-Hawksell-Cacmod complex 0 to 2 percent slopes
9308	Foreright-Bluemod-Cacmod-Deepone, family, complex
9504	Foreright-Bluemod-Hoofer complex, 2 to 35 percent slopes
9702	Badland-Rock outcrop complex
DA	Denied Access
NOTCOM	No Digital Data Available
W(2)	Water

Notes:

1. RJH changed group #5703 in the Bridger National Forest Eastern Part dataset to #5703BE to match the Sublette County dataset.
2. RJH changed group numbers for water in both datasets (#1000 in the Bridger set and #1100 in Sublette set) to "W."

ATTACHMENT C

WSEO WELL GIS DATA NEGATIVE VALUE EXPLANATION

Attachment C: WSEO Well GIS Data Negative Value Explanation

Depth to Static Water Level	
Value	**Description**
-7	Dry
-6	Artesian
-4	Flowing
-1	Unknown

Well Depths	
Value	**Description**
-1	Unknown
0	Unknown

Well Yeild	
Value	**Description**
-1	Unknown

Depth to Principal Water Bearing Formation	
Value	**Description**
-7	Dry
-1	Unknown

Appendix F.
Peak Flow Analysis

Figures

Figure F.1. Flood frequency analysis for Pole Creek below Little Half Moon Lake near Pinedale, WY (USGS Gage 09198500). 3
Figure F.2. Flood frequency analysis for Fall Creek near Pinedale, WY (USGS Gage 09199500). 4
Figure F.3. Flood frequency analysis for Silver Creek near Big Sandy, WY (USGS Gage 09204000). 5
Figure F.4. Flood frequency analysis for Boulder Creek near Boulder, WY (USGS Gage 09202500). 6
Figure F.5. Flood frequency analysis for Boulder Creek below Boulder Lake near Boulder, WY (USGS Gage 09202000). 7
Figure F.6. Flood frequency analysis for East Fork at New Fork, WY (USGS Gage 09204500). 8
Figure F.7. Flood frequency analysis for East Fork River near Big Sandy, WY (USGS Gage 09203000). 9
Figure F.8. Flood frequency analysis for Pine Creek at Pinedale, WY (USGS Gage 09198000). 10
Figure F.9. Flood frequency analysis for Pine Creek below Fremont Lake, WY (USGS Gage 09197000). 11
Figure F.10. Flood frequency analysis for Pine Creek above Fremont Lake, WY (USGS Gage 09196500). 12
Figure F.11. Flood frequency analysis for New Fork River near Big Piney, WY (USGS Gage 09205000). 13
Figure F.12. Flood frequency analysis for New Fork River below New Fork Lake, near Cora, WY (USGS Gage 09193000). 14
Figure F.13. Flood frequency analysis for New Fork River near Boulder, WY (USGS Gage 09201000). 15

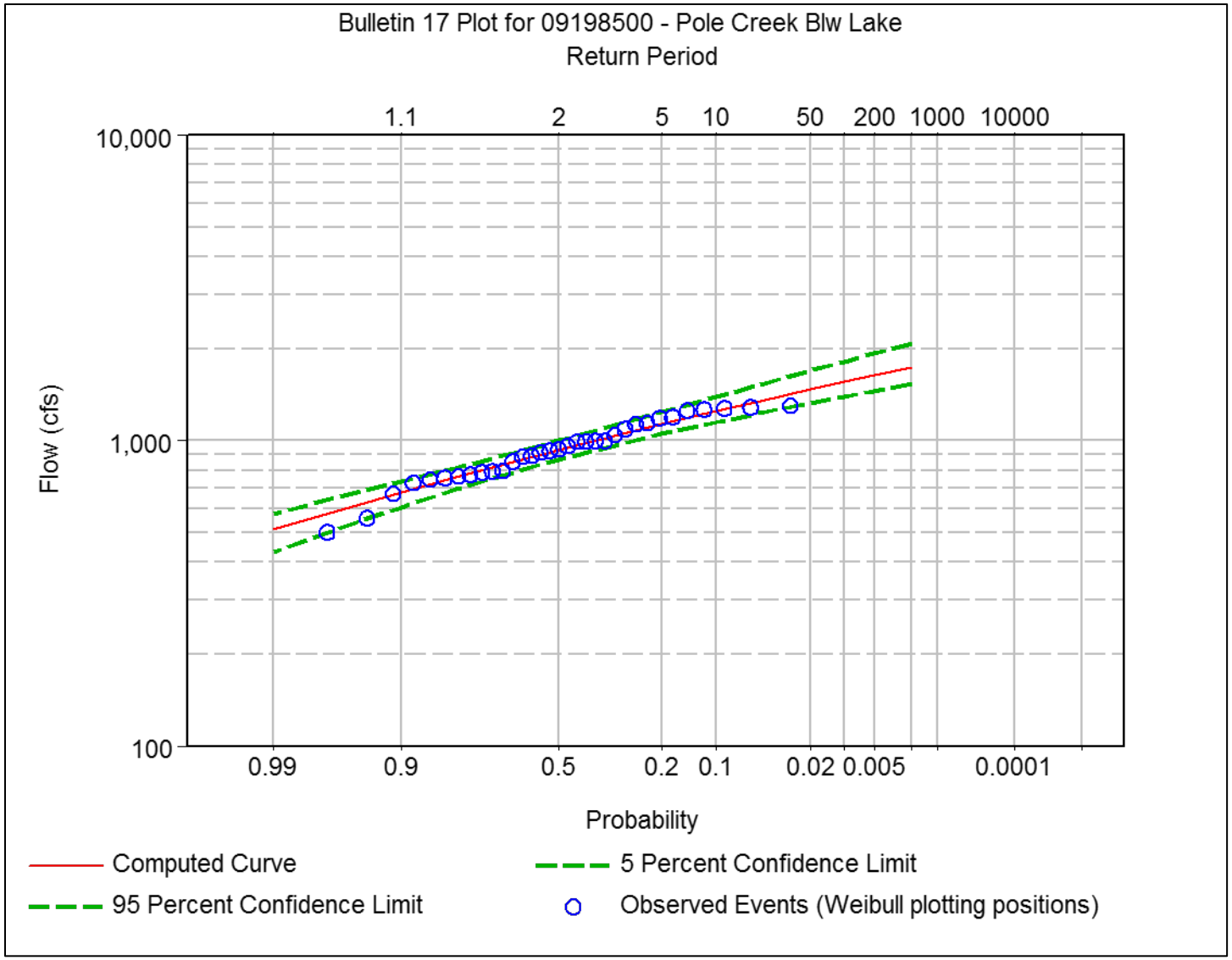

Figure F.1. Flood frequency analysis for Pole Creek below Little Half Moon Lake near Pinedale, WY (USGS Gage 09198500).

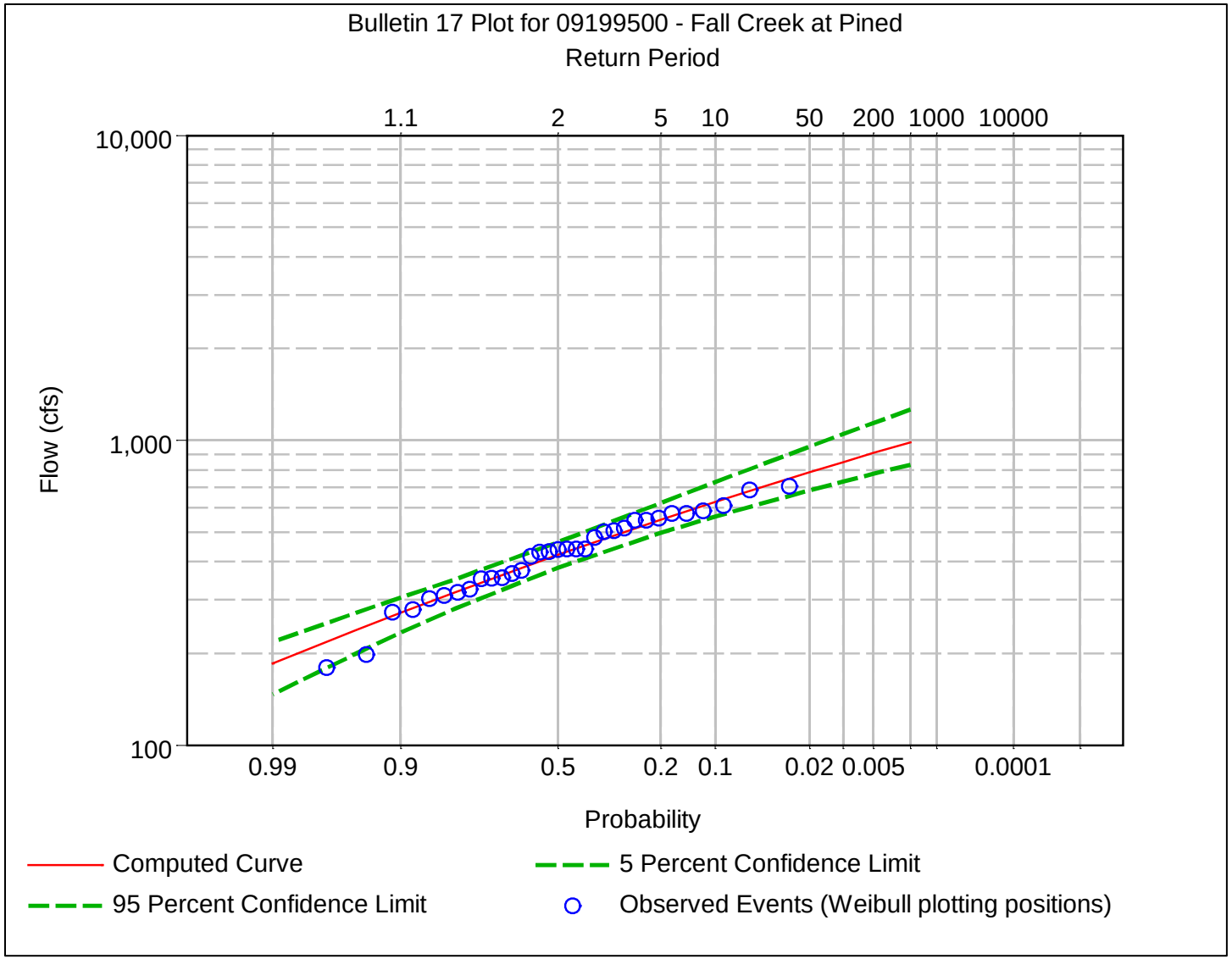

Figure F.2. Flood frequency analysis for Fall Creek near Pinedale, WY (USGS Gage 09199500).

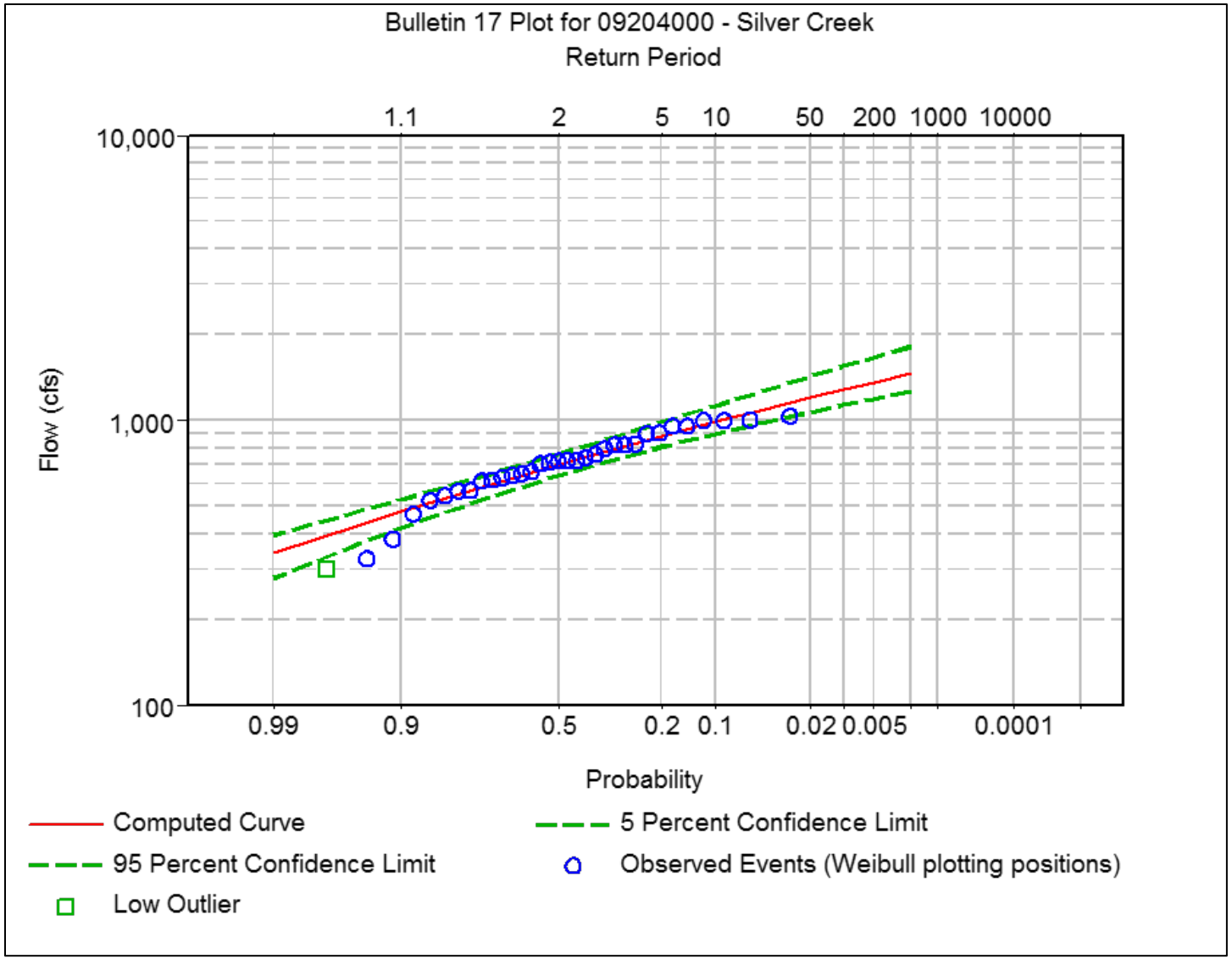

Figure F.3. Flood frequency analysis for Silver Creek near Big Sandy, WY (USGS Gage 09204000).

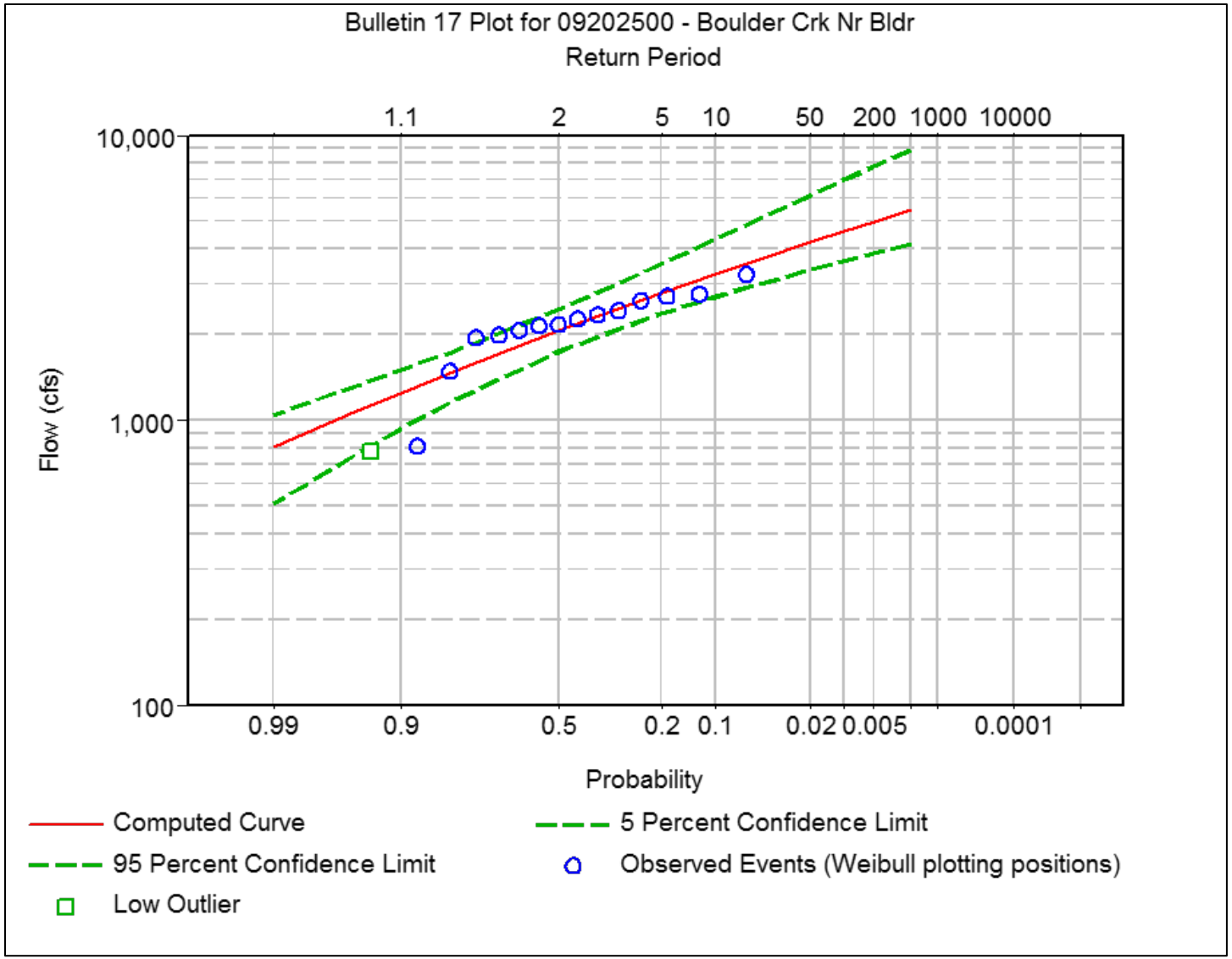

Figure F.4. Flood frequency analysis for Boulder Creek near Boulder, WY (USGS Gage 09202500).

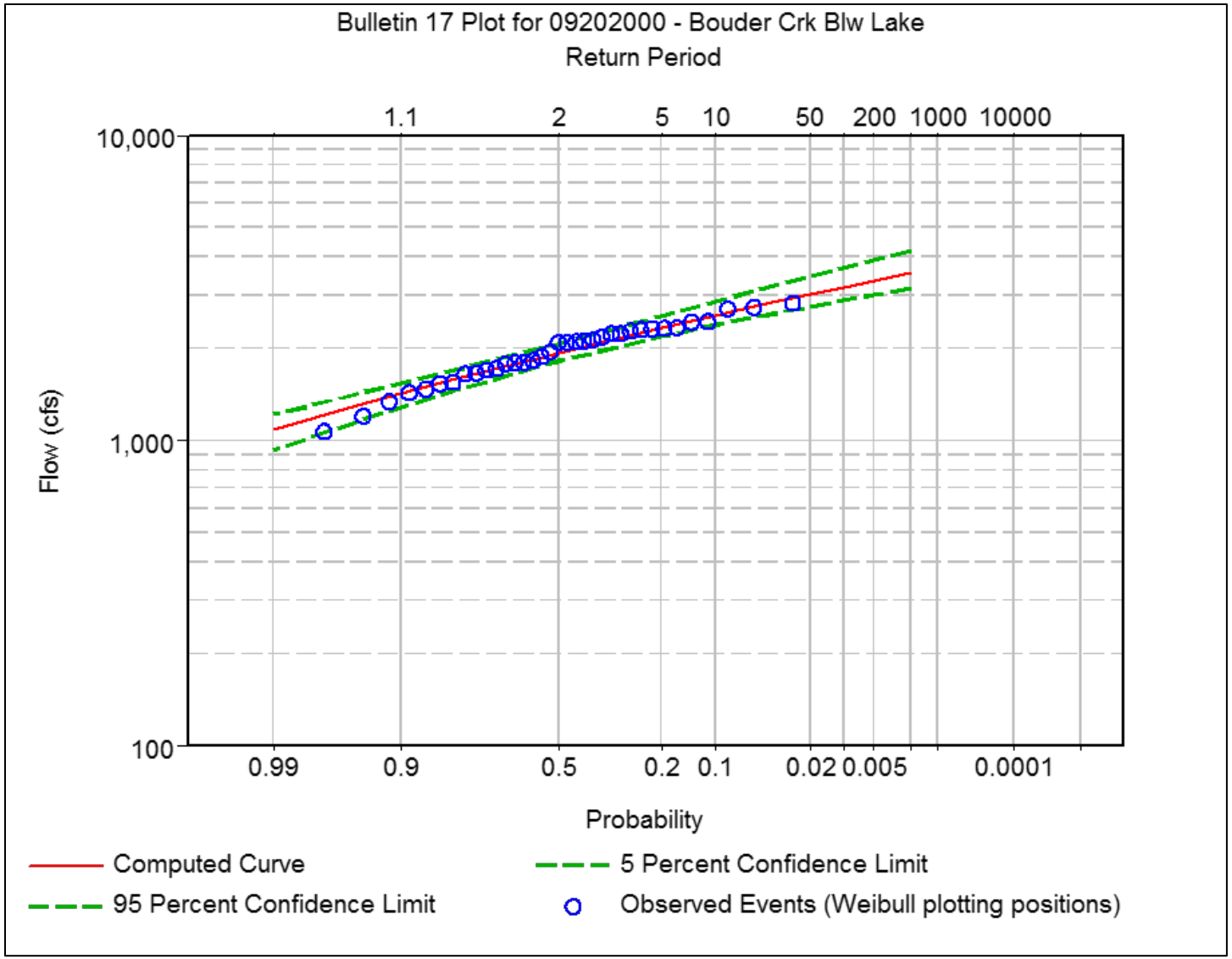

Figure F.5. Flood frequency analysis for Boulder Creek below Boulder Lake near Boulder, WY (USGS Gage 09202000).

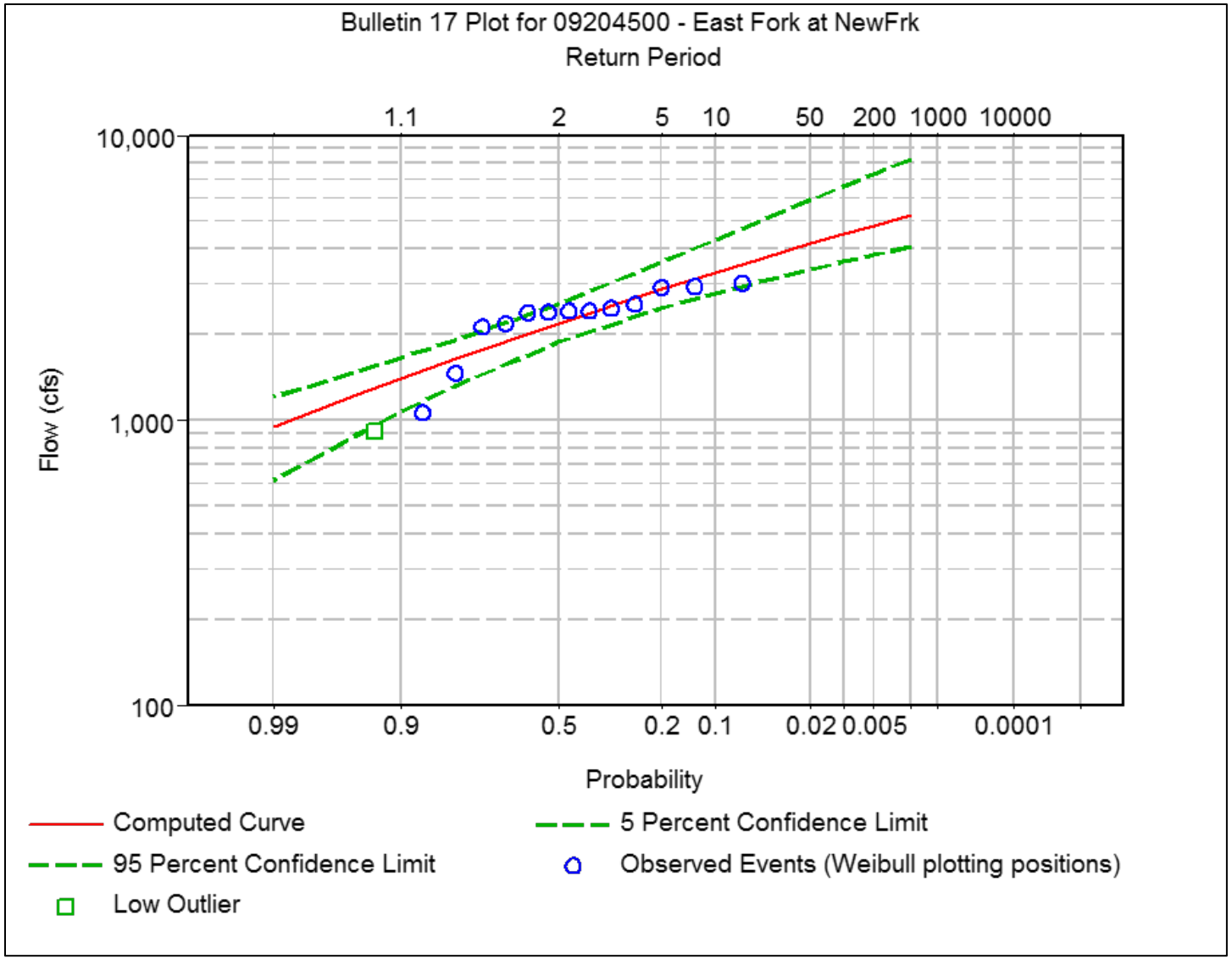

Figure F.6. Flood frequency analysis for East Fork at New Fork, WY (USGS Gage 09204500).

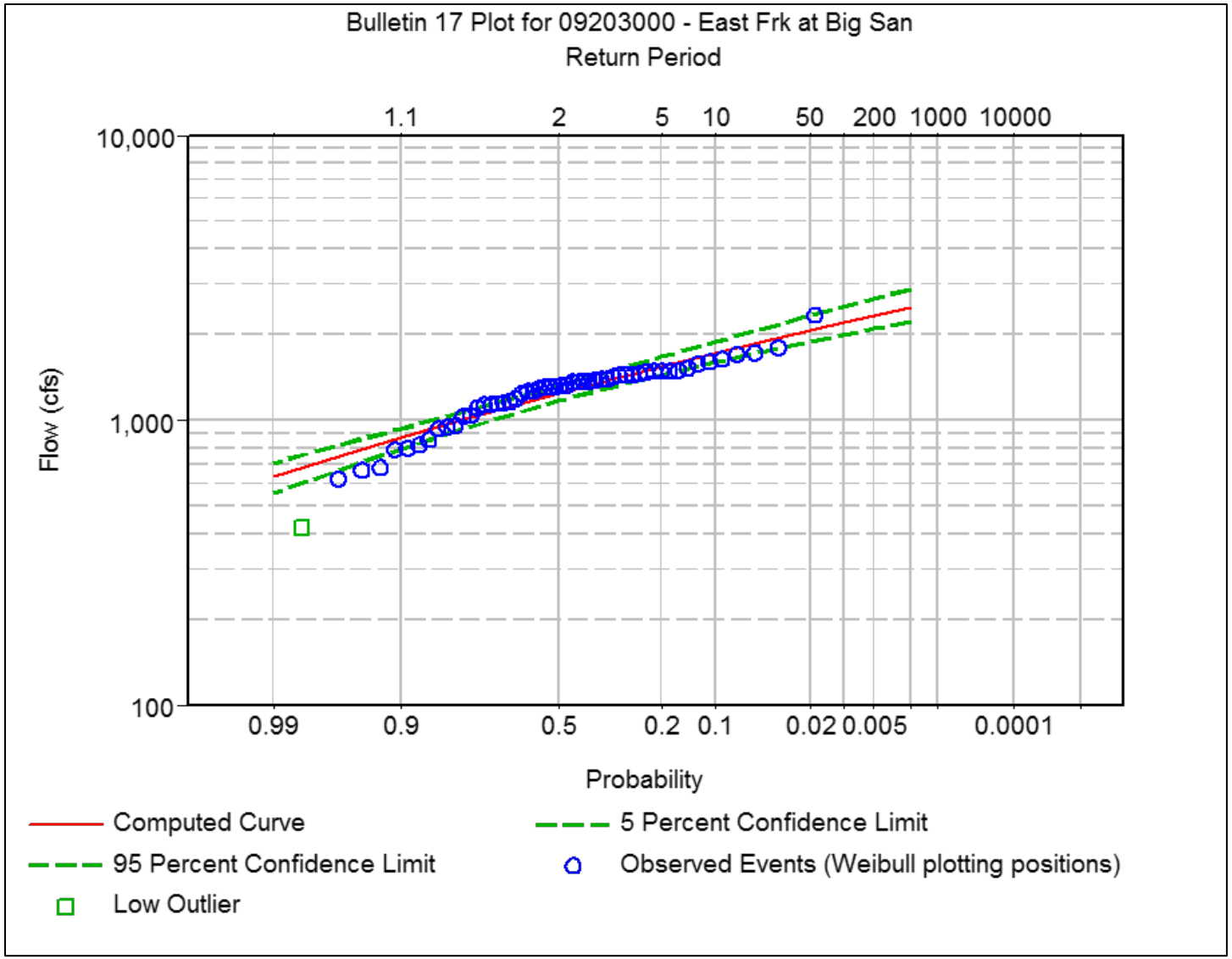

Figure F.7. Flood frequency analysis for East Fork River near Big Sandy, WY (USGS Gage 09203000).

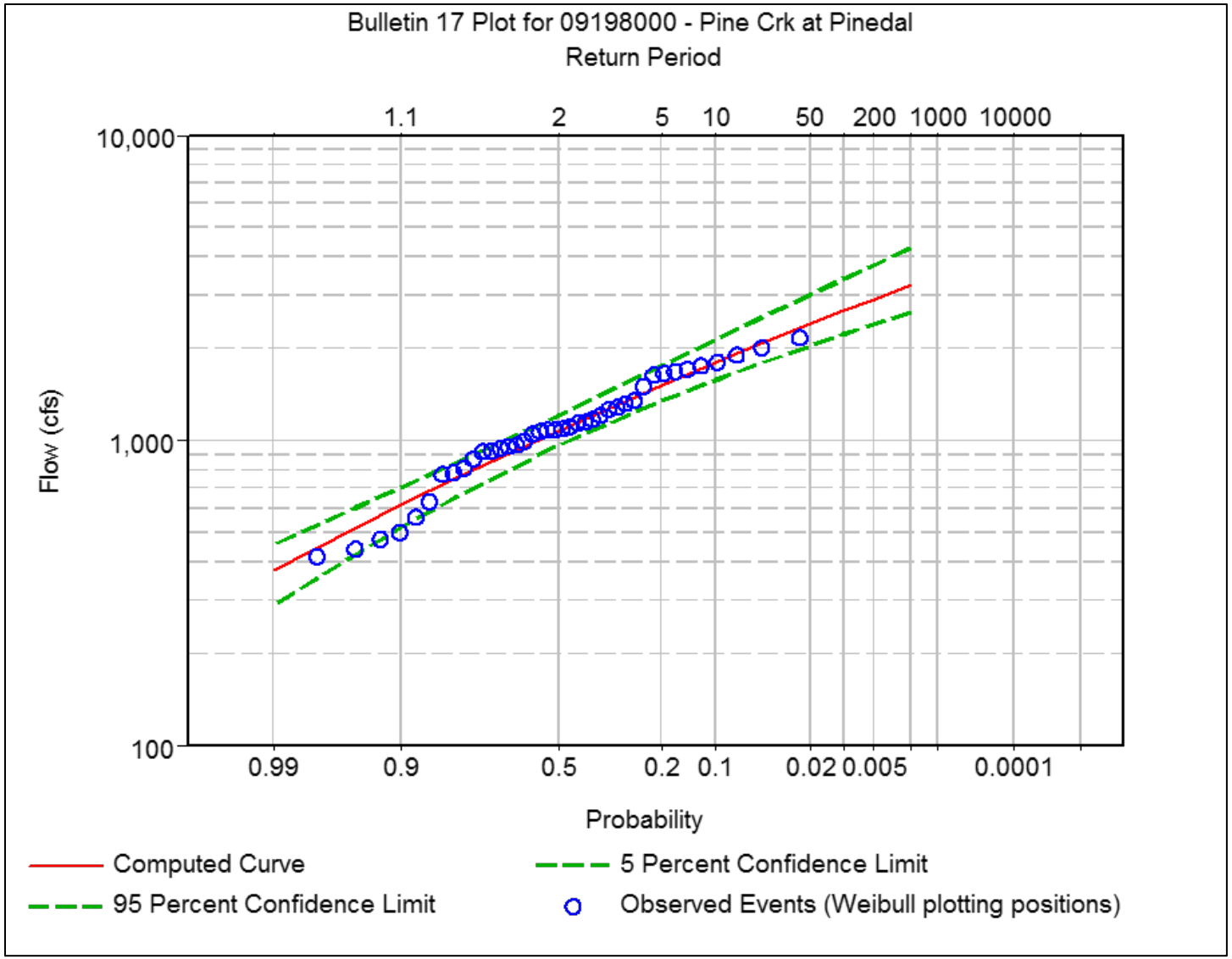

Figure F.8. Flood frequency analysis for Pine Creek at Pinedale, WY (USGS Gage 09198000).

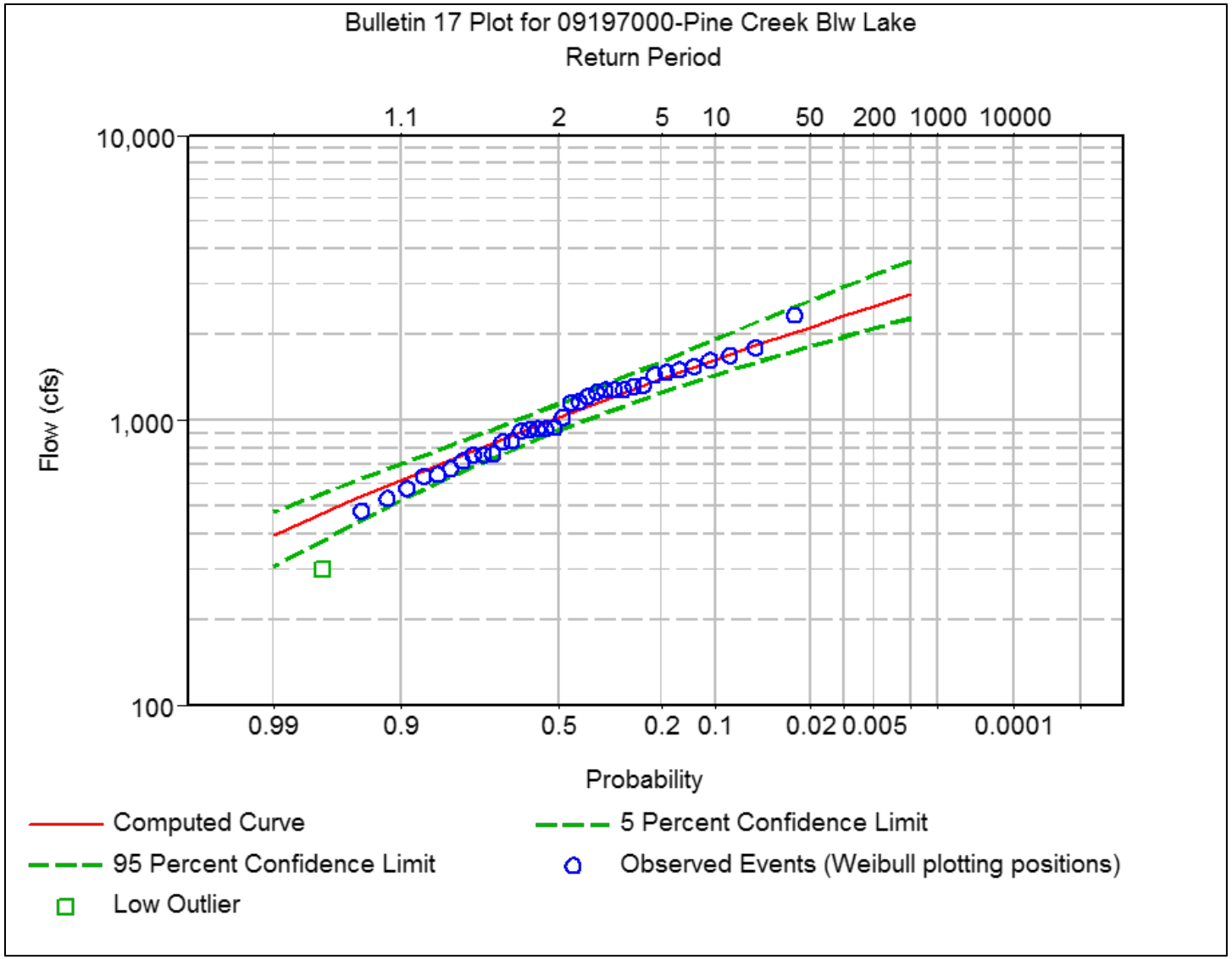

Figure F.9. Flood frequency analysis for Pine Creek below Fremont Lake, WY (USGS Gage 09197000).

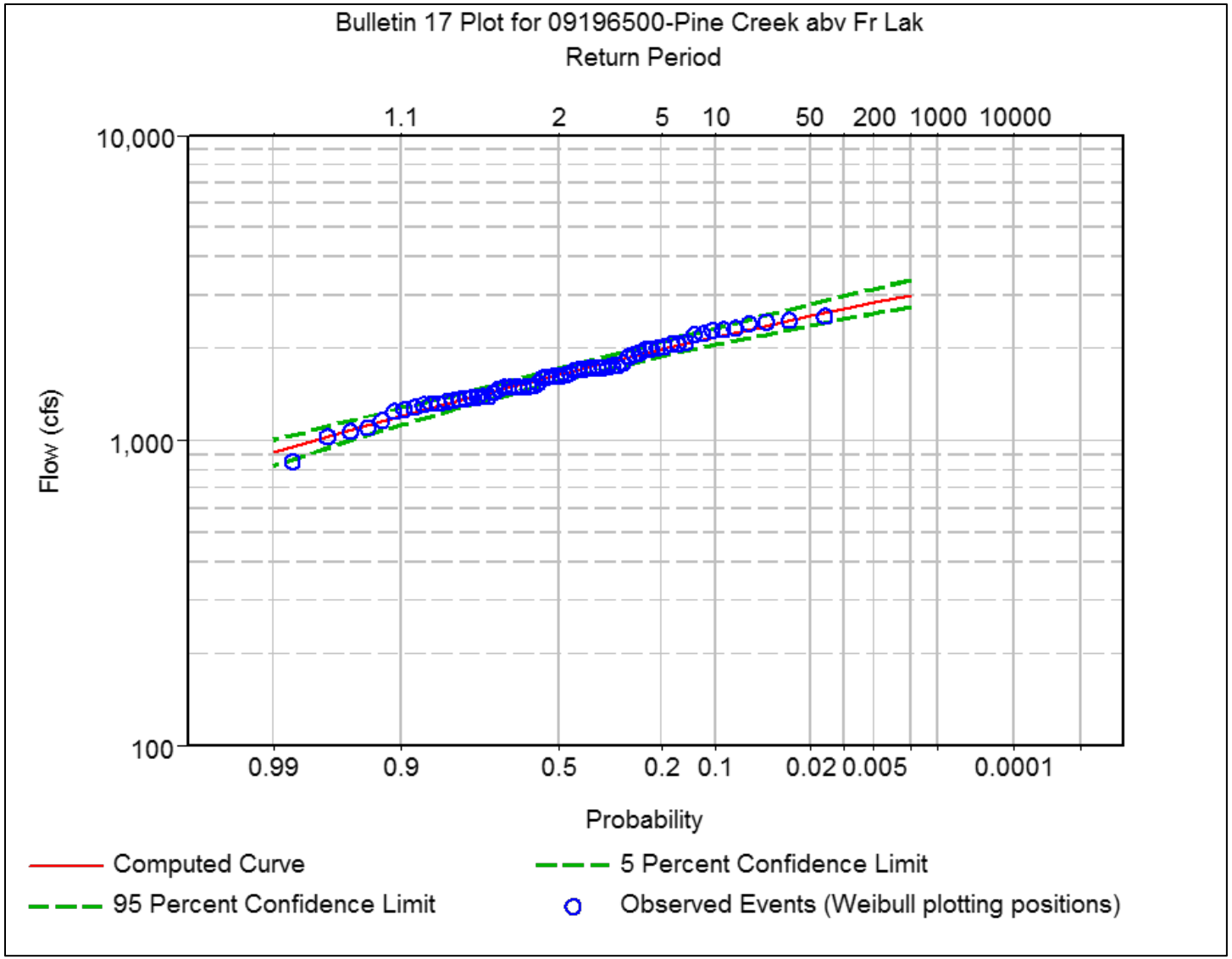

Figure F.10. Flood frequency analysis for Pine Creek above Fremont Lake, WY (USGS Gage 09196500).

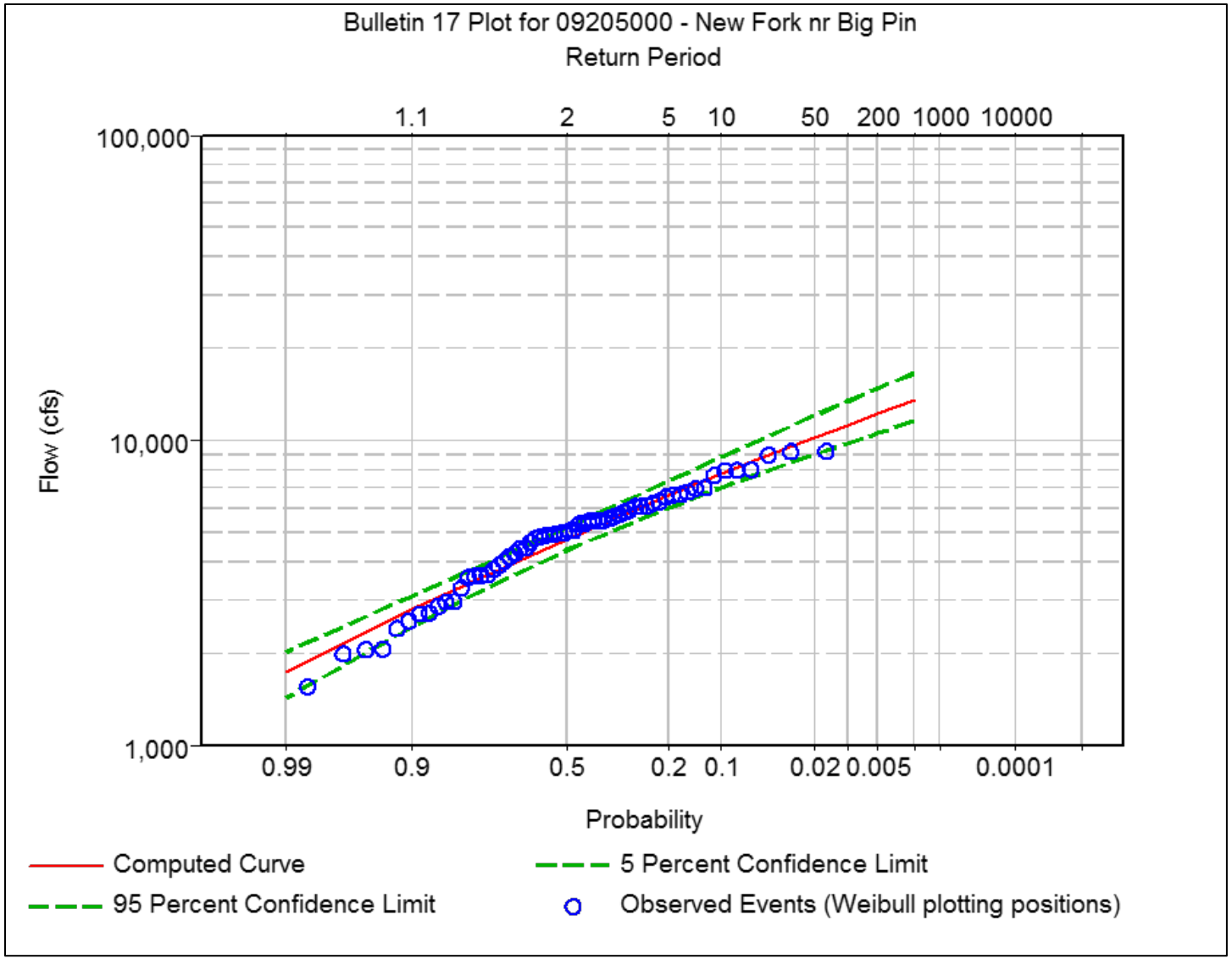

Figure F.11. Flood frequency analysis for New Fork River near Big Piney, WY (USGS Gage 09205000).

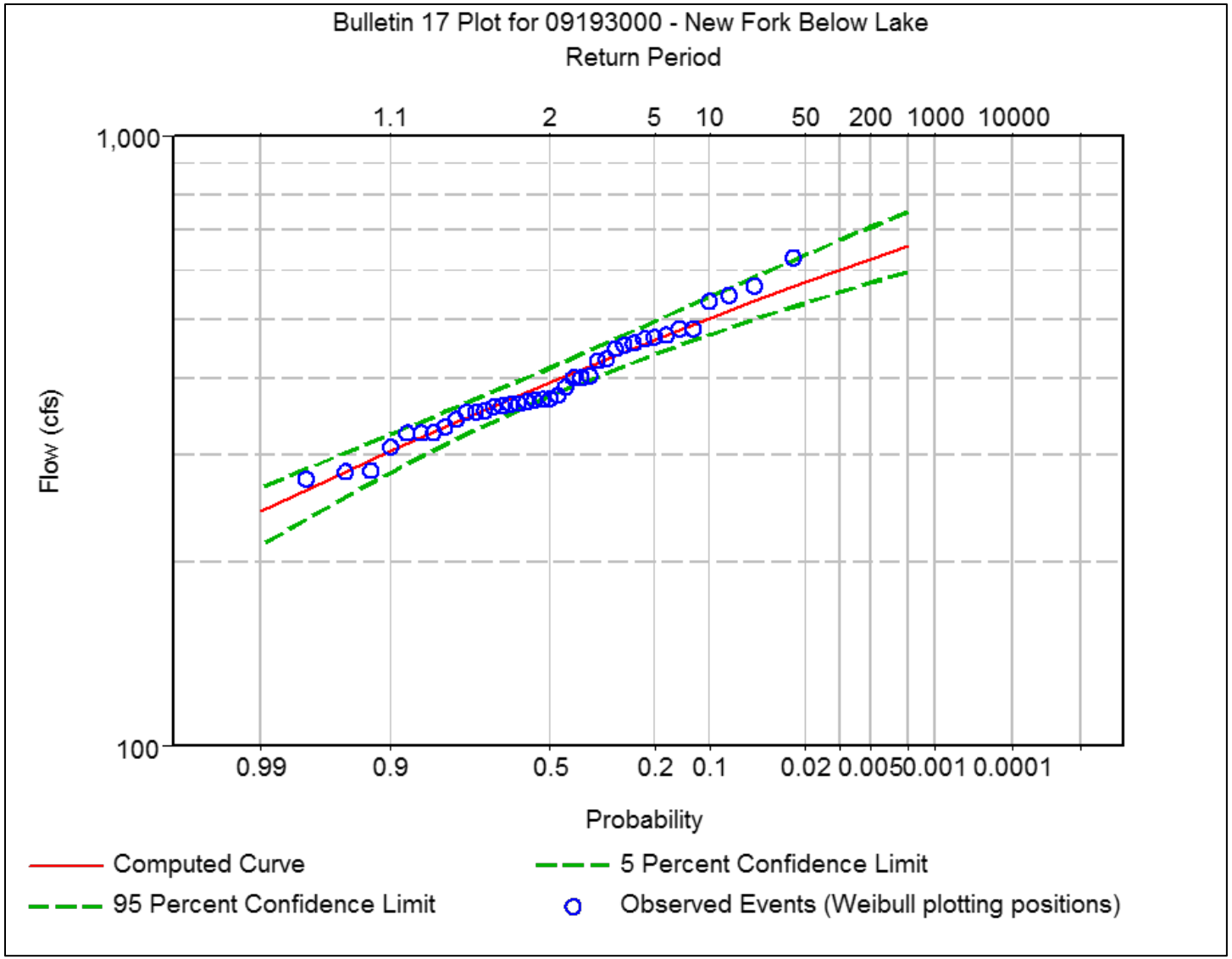

Figure F.12. Flood frequency analysis for New Fork River below New Fork Lake, near Cora, WY (USGS Gage 09193000).

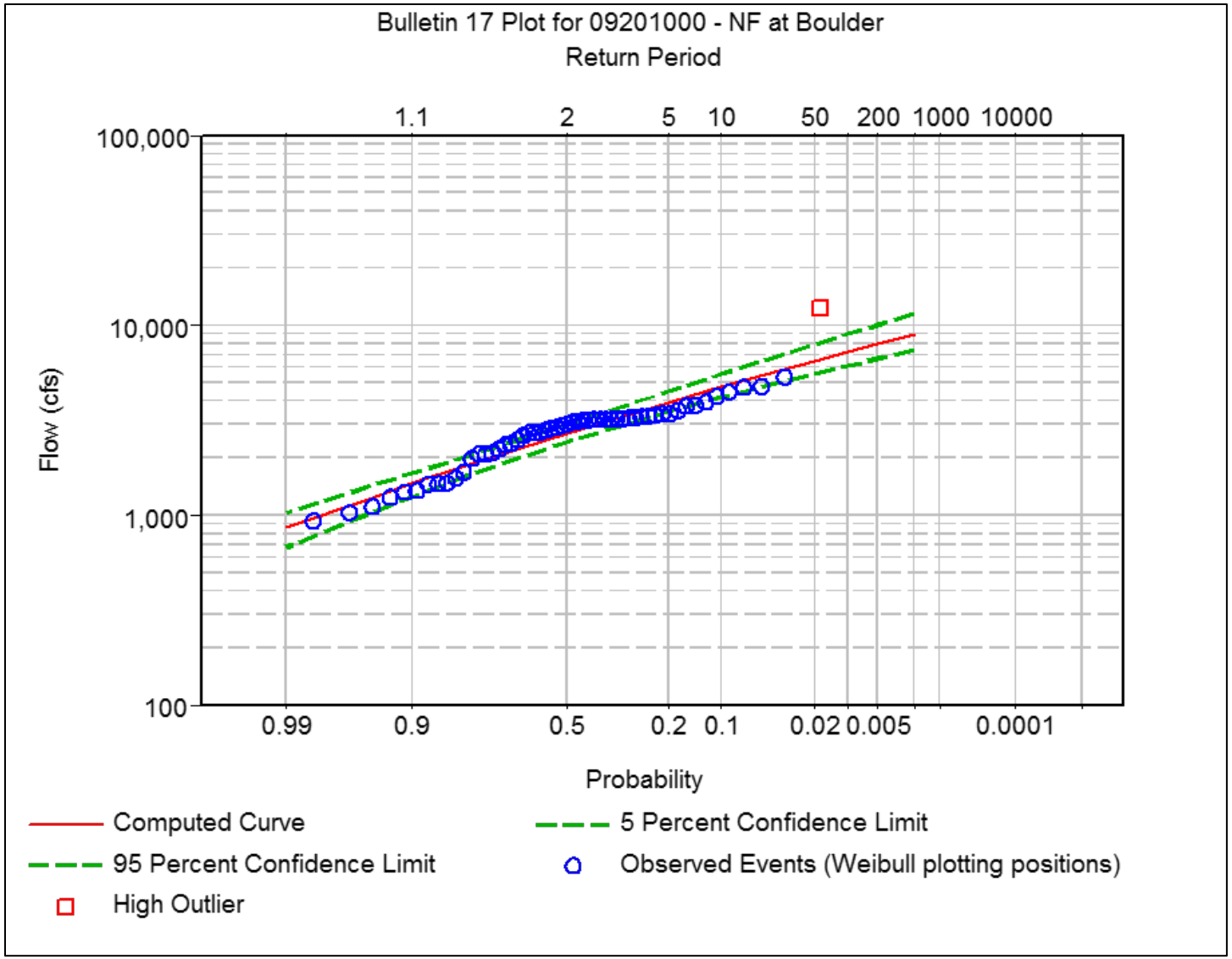

Figure F.13. Flood frequency analysis for New Fork River near Boulder, WY (USGS Gage 09201000).

Appendix G.
Flow Duration Analysis

Figures

Figure G.1. Flow duration analysis for Pole Creek below Little Half Moon Lake near Pinedale, WY (USGS Gage 09198500). 3
Figure G.2. Flow duration analysis for Fall Creek near Pinedale, WY (USGS Gage 09199500). 4
Figure G.3. Flow duration analysis for Silver Creek near Big Sandy, WY (USGS Gage 09204000). 5
Figure G.4. Flow duration analysis for Boulder Creek near Boulder, WY (USGS Gage 09202500). 6
Figure G.5. Flow duration analysis for Boulder Creek below Boulder Lake near Boulder, WY (USGS Gage 09202000). 7
Figure G.6. Flow duration analysis for East Fork at New Fork, WY (USGS Gage 09204500). 8
Figure G.7. Flow duration analysis for East Fork River near Big Sandy, WY (USGS Gage 09203000). 9
Figure G.8. Flow duration analysis for Pine Creek at Pinedale, WY (USGS Gage 09198000). 10
Figure G.9. Flow duration analysis for Pine Creek below Fremont Lake, WY (USGS Gage 09197000). .. 11
Figure G.10. Flow duration analysis for Pine Creek above Fremont Lake, WY (USGS Gage 09196500). 12
Figure G.11. Flow duration analysis for New Fork River near Big Piney, WY (USGS Gage 09205000). .. 13
Figure G.12. Flow duration analysis for New Fork River below New Fork Lake, near Cora, WY (USGS Gage 09193000). 14
Figure G.13. Flow duration analysis for New Fork River near Boulder, WY (USGS Gage 09201000). 15

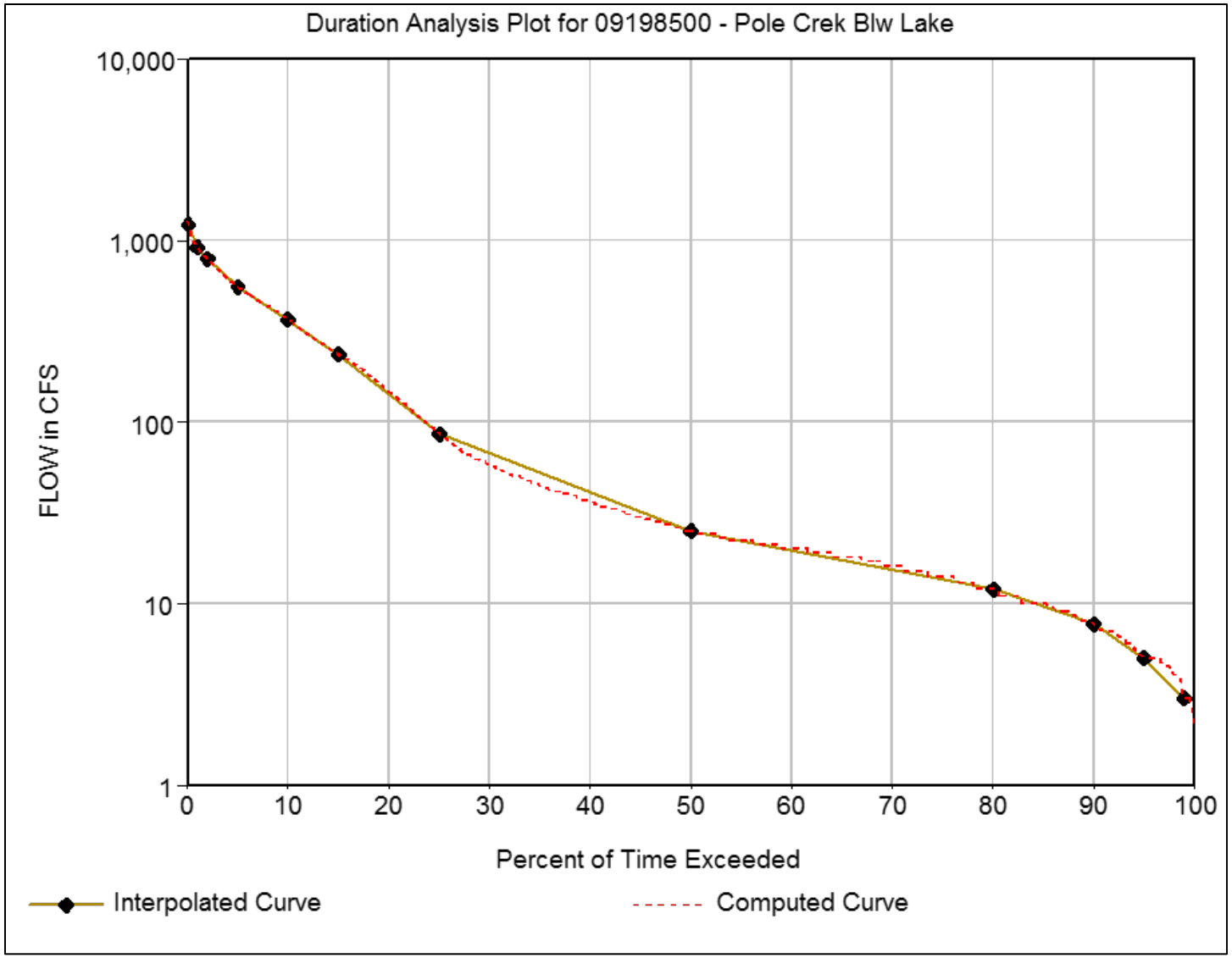

Figure G.1. Flow duration analysis for Pole Creek below Little Half Moon Lake near Pinedale, WY (USGS Gage 09198500).

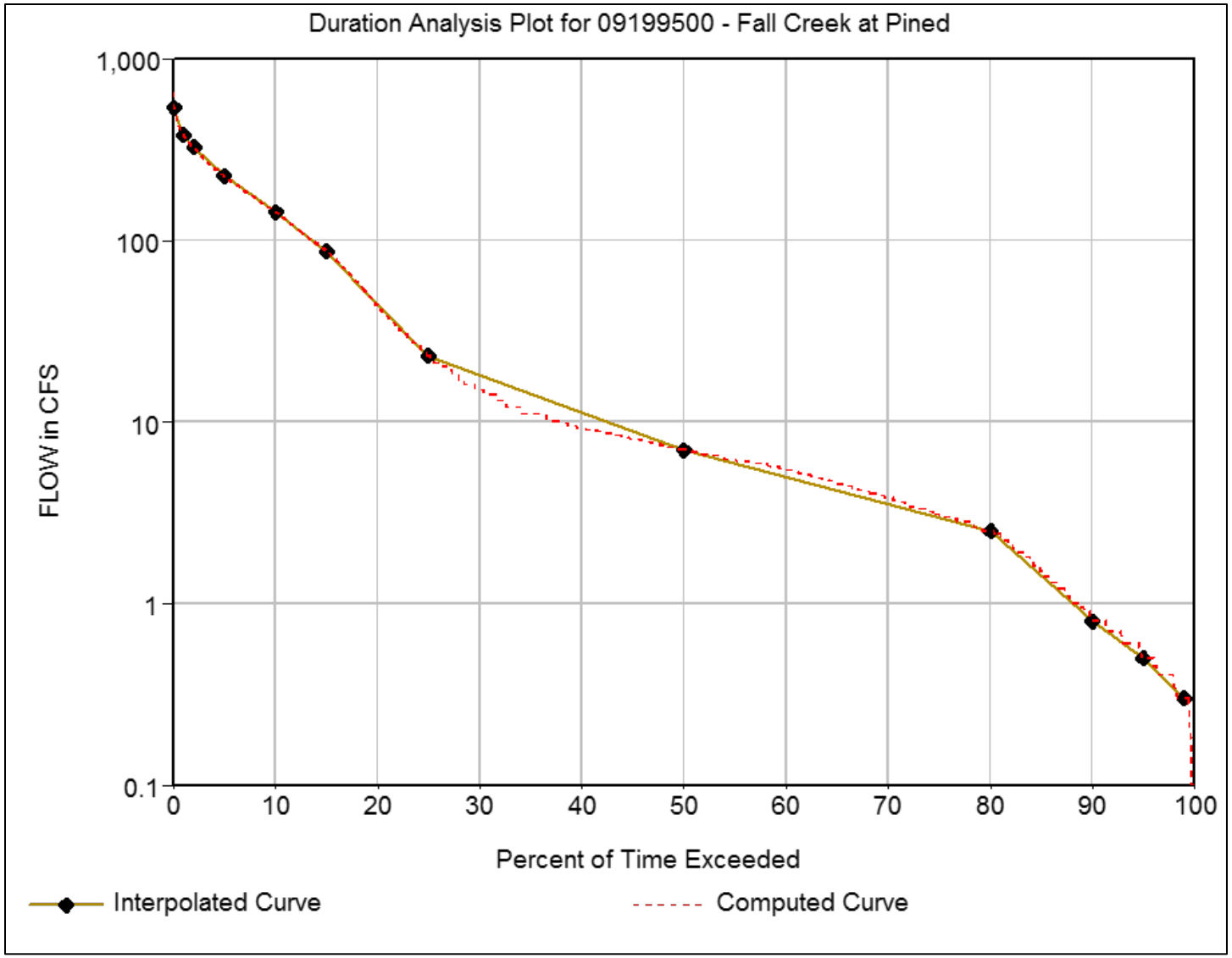

Figure G.2. Flow duration analysis for Fall Creek near Pinedale, WY (USGS Gage 09199500).

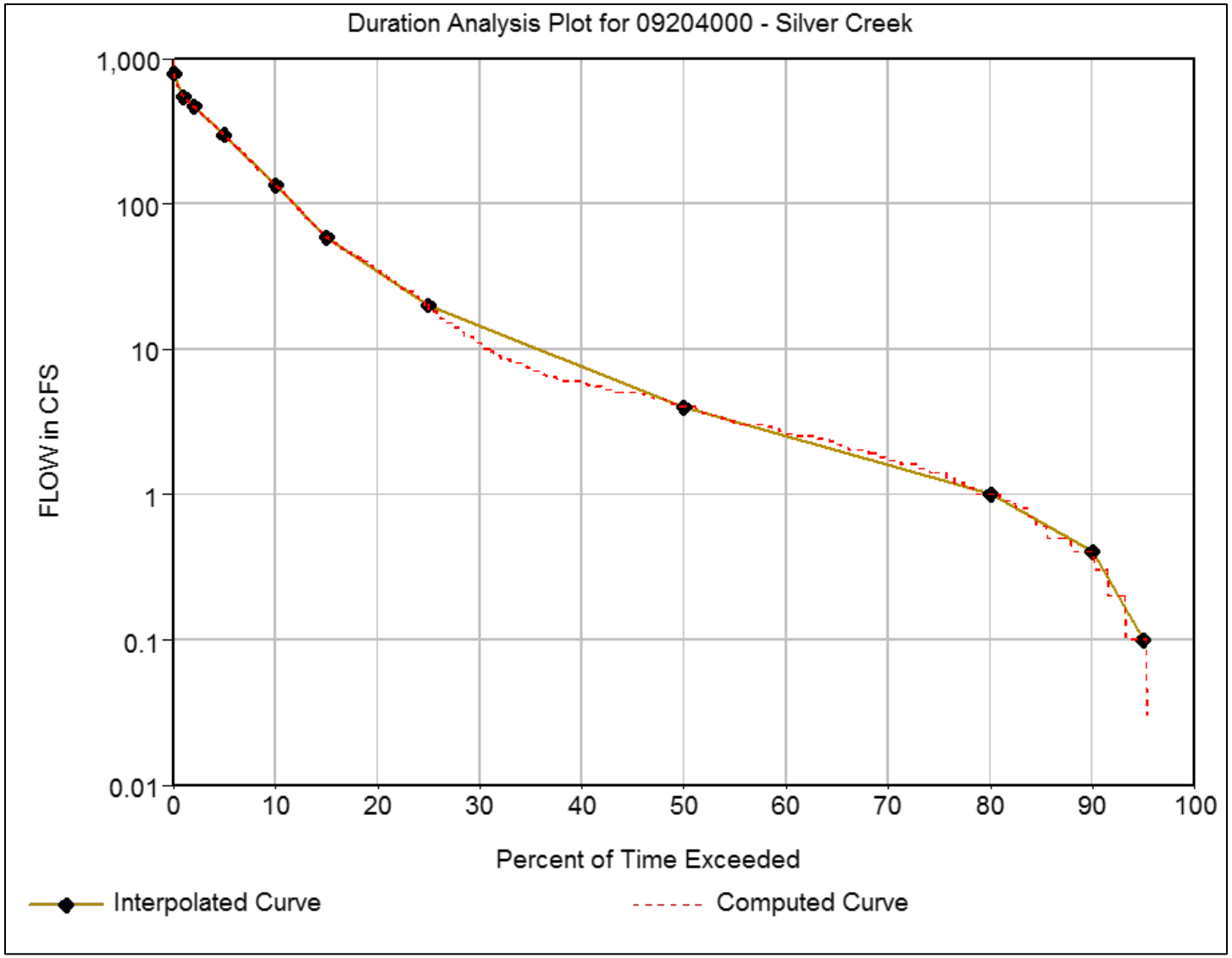

Figure G.3. Flow duration analysis for Silver Creek near Big Sandy, WY (USGS Gage 09204000).

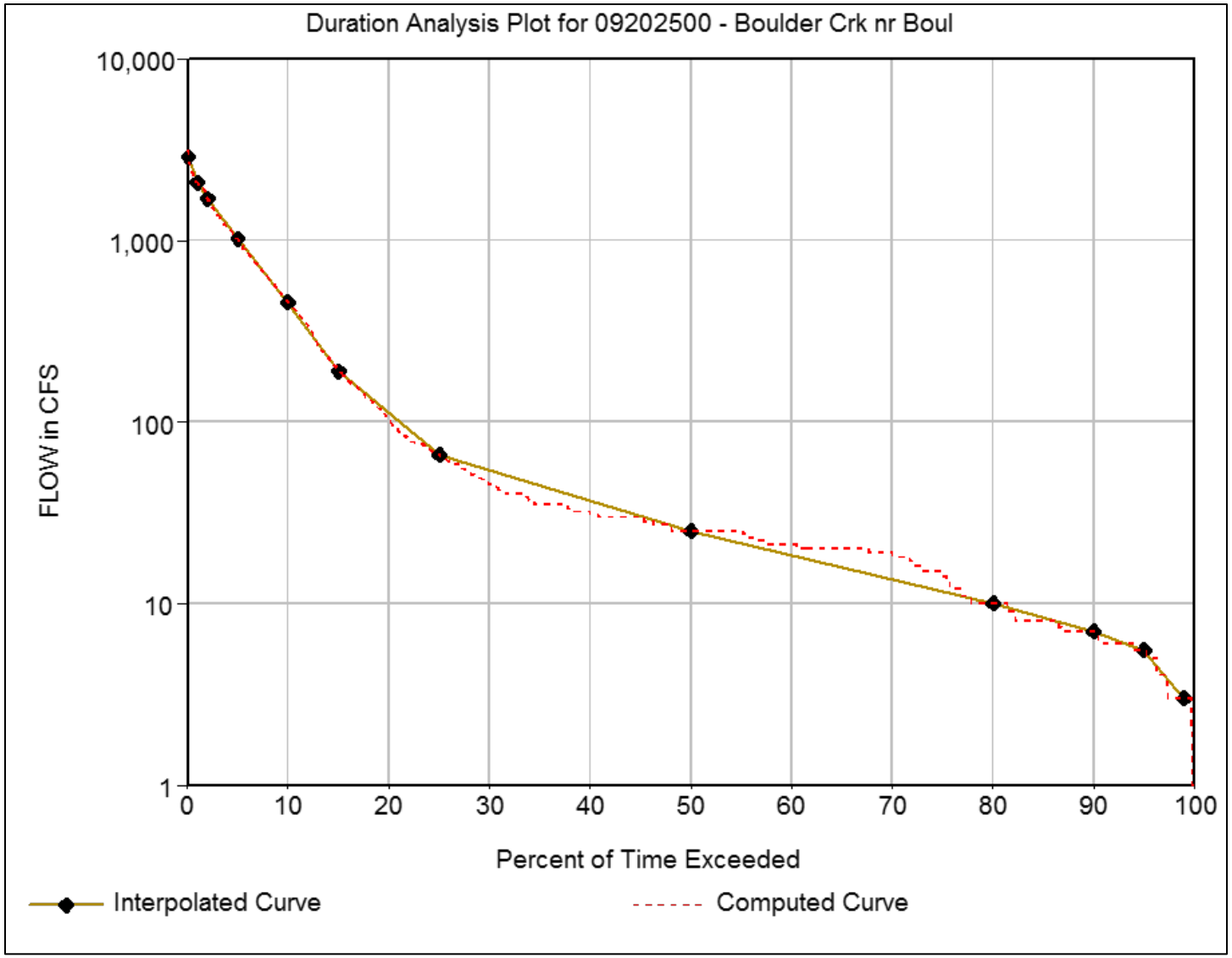

Figure G.4. Flow duration analysis for Boulder Creek near Boulder, WY (USGS Gage 09202500).

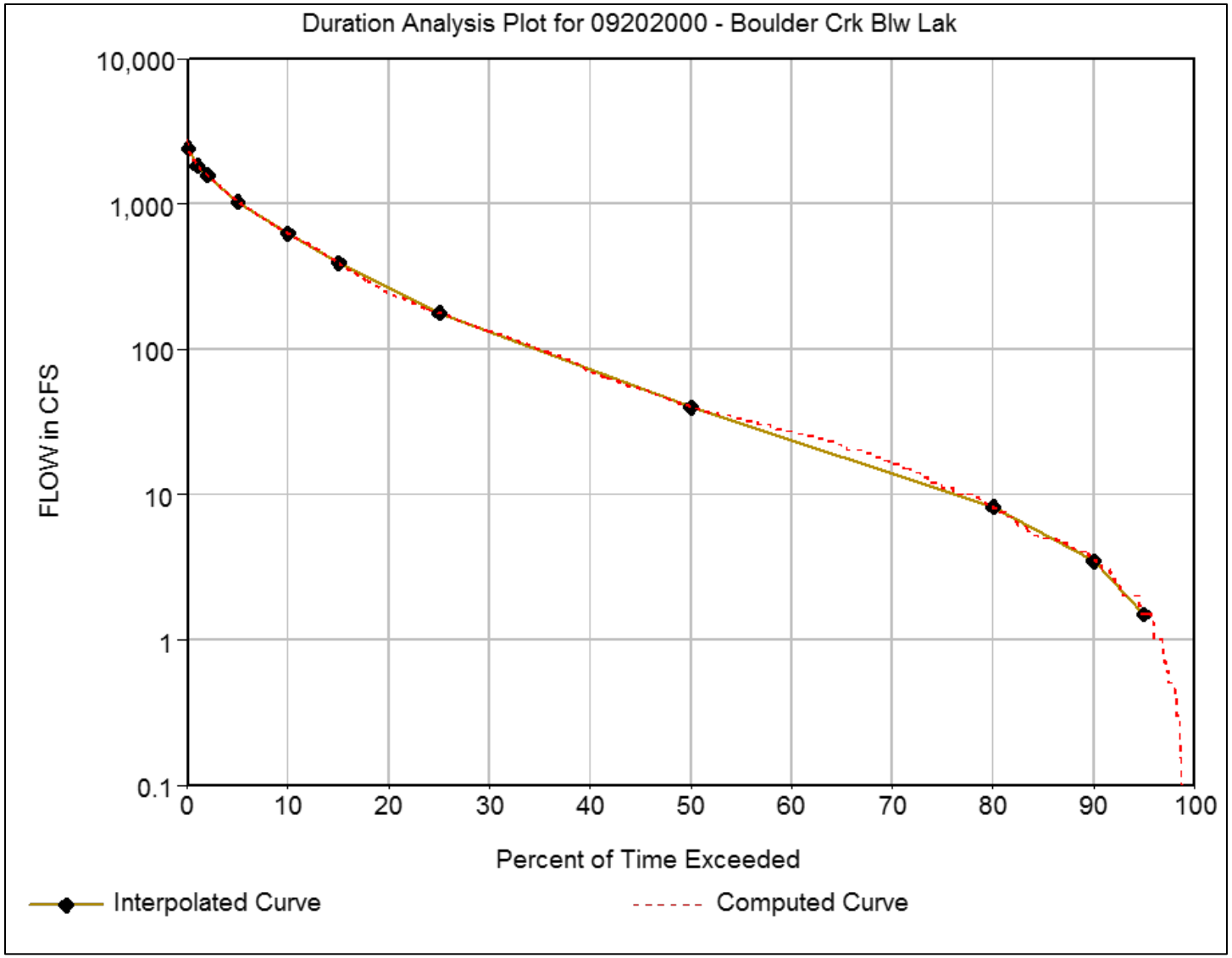

Figure G.5. Flow duration analysis for Boulder Creek below Boulder Lake near Boulder, WY (USGS Gage 09202000).

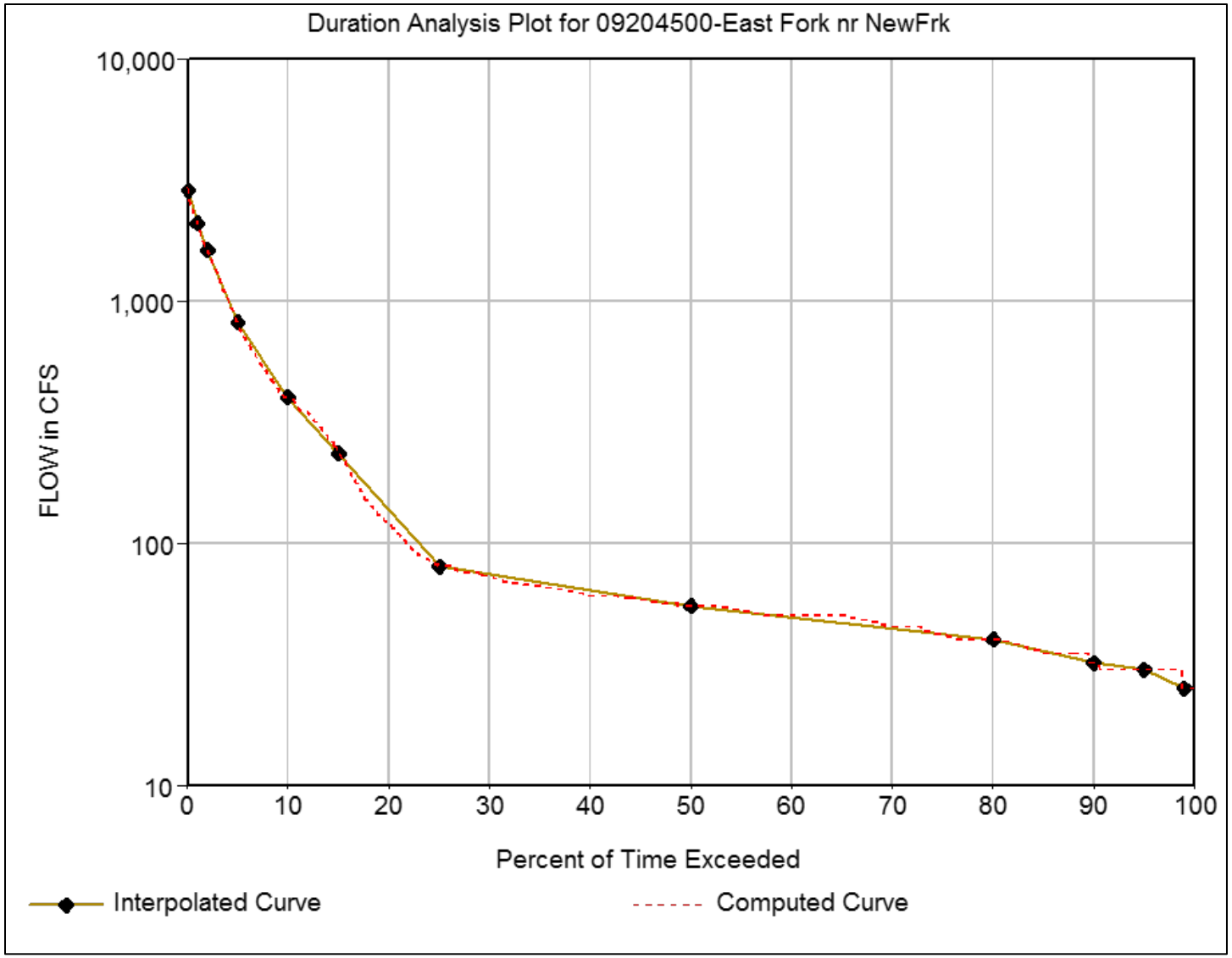

Figure G.6. Flow duration analysis for East Fork at New Fork, WY (USGS Gage 09204500).

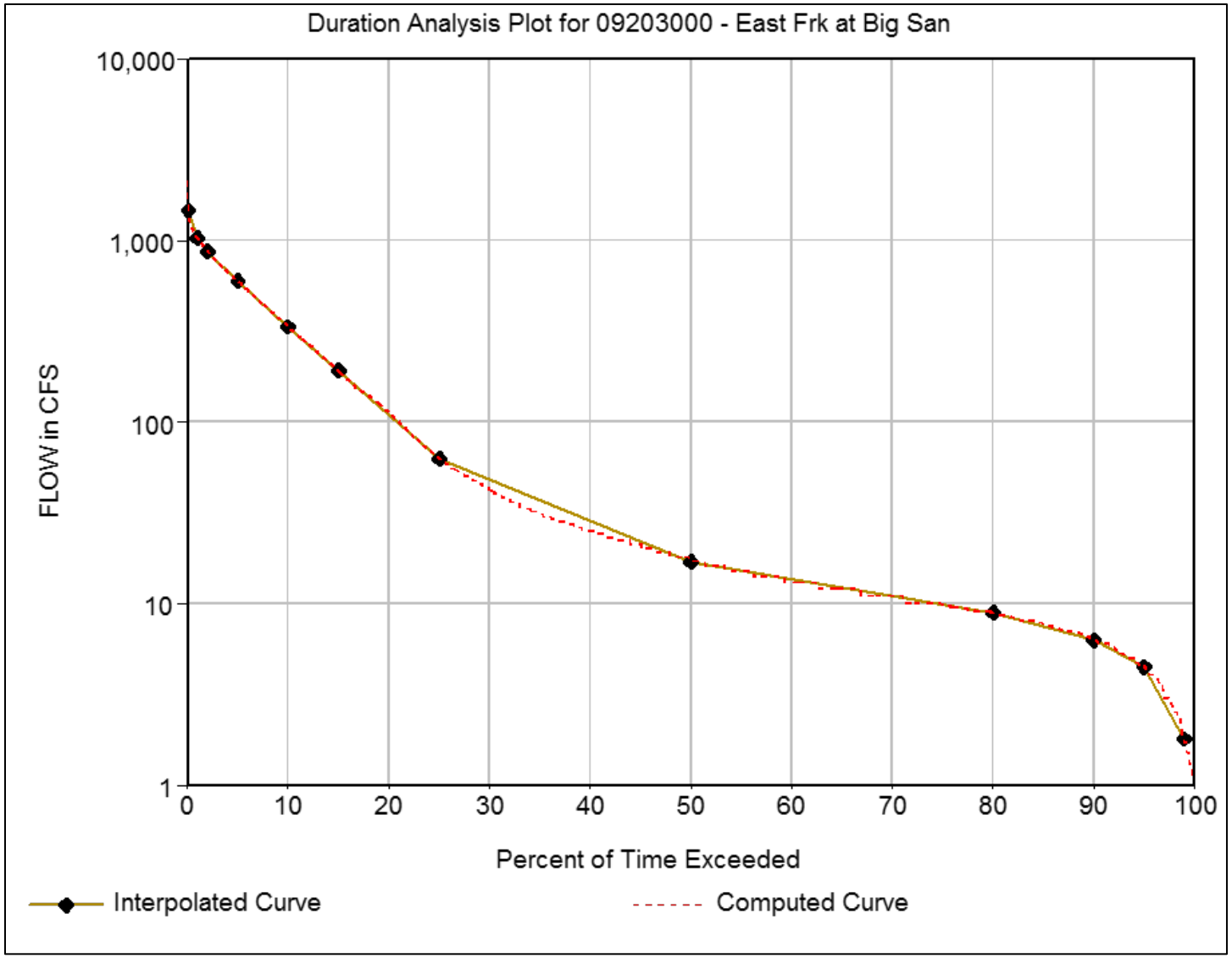

Figure G.7. Flow duration analysis for East Fork River near Big Sandy, WY (USGS Gage 09203000).

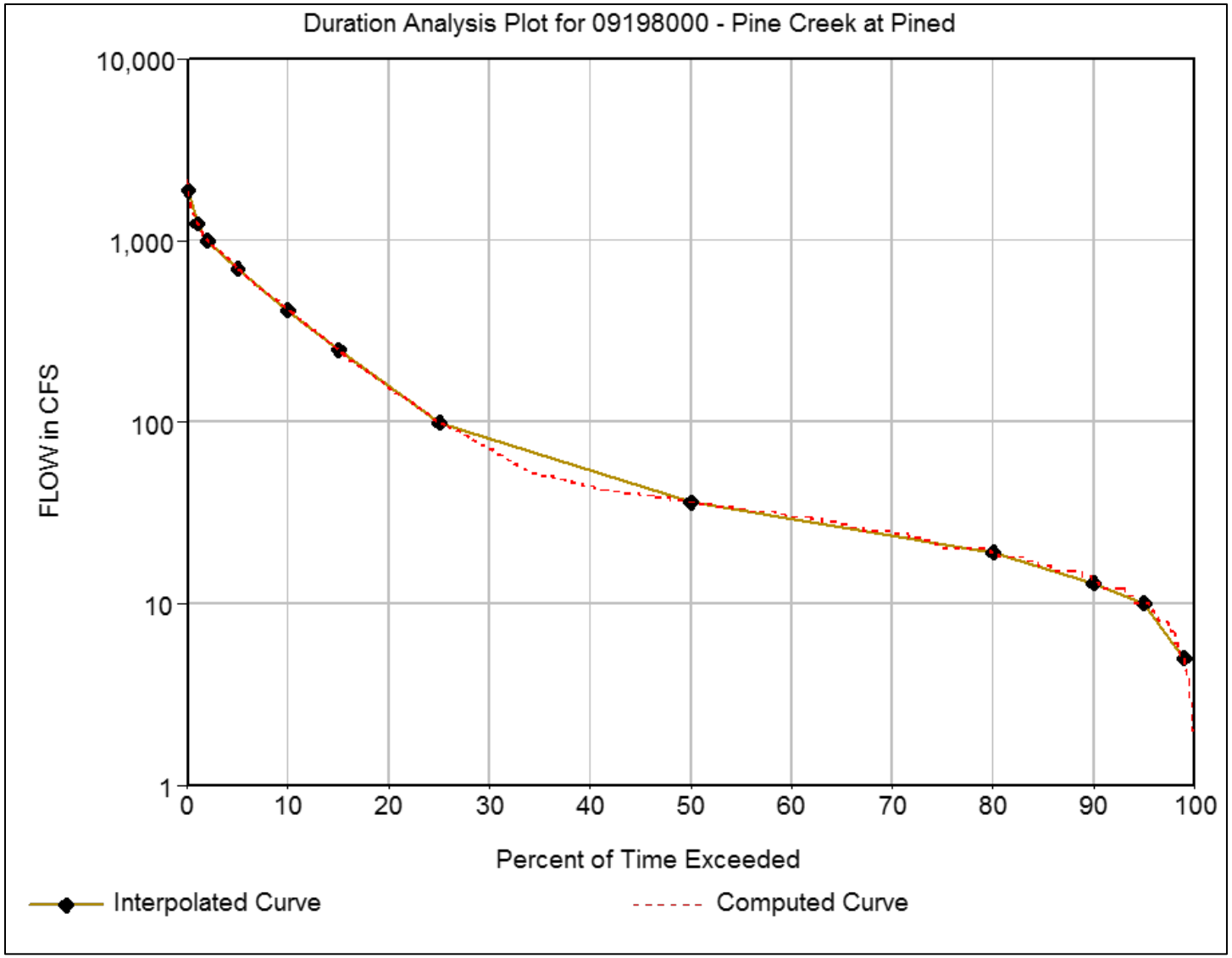

Figure G.8. Flow duration analysis for Pine Creek at Pinedale, WY (USGS Gage 09198000).

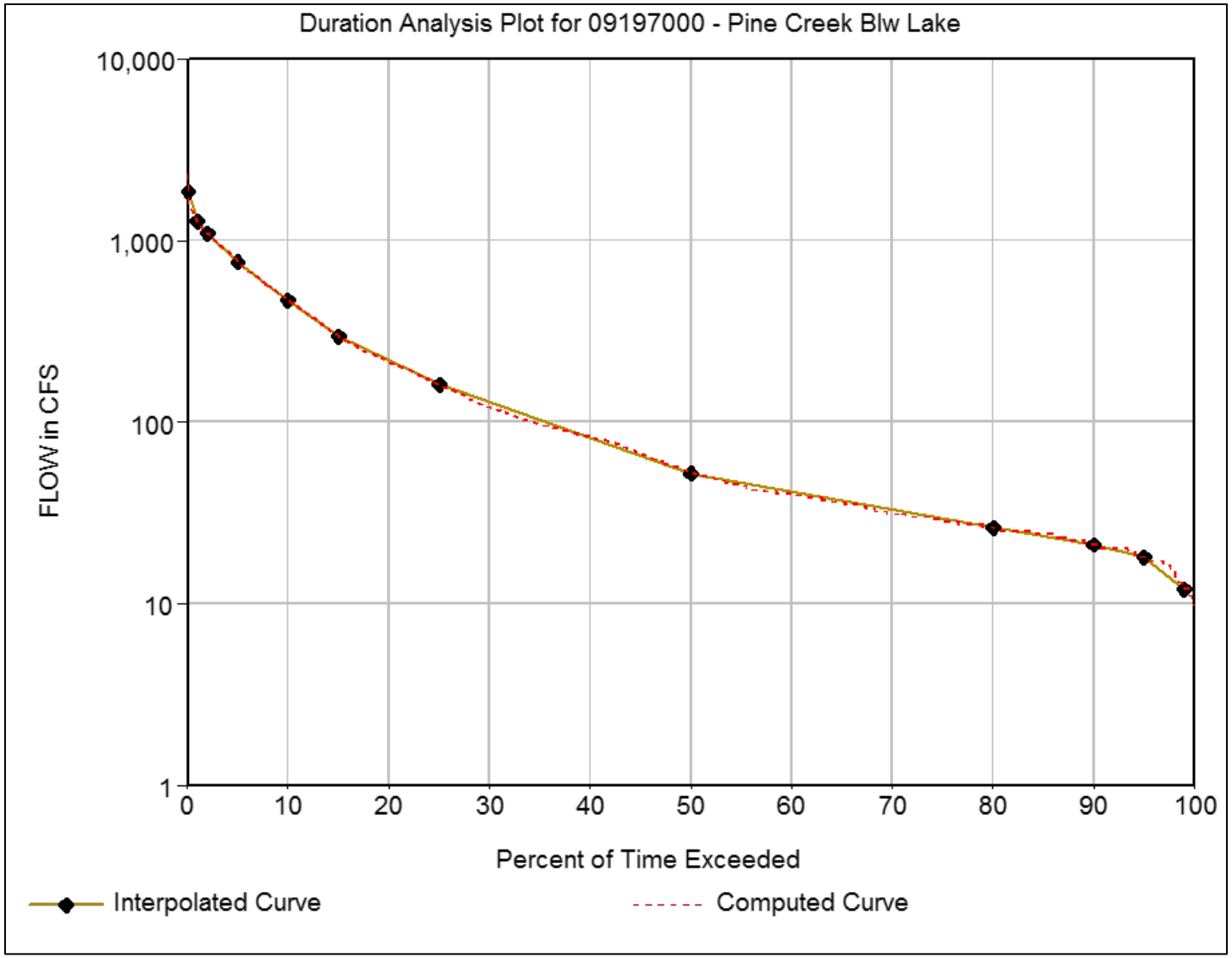

Figure G.9. Flow duration analysis for Pine Creek below Fremont Lake, WY (USGS Gage 09197000).

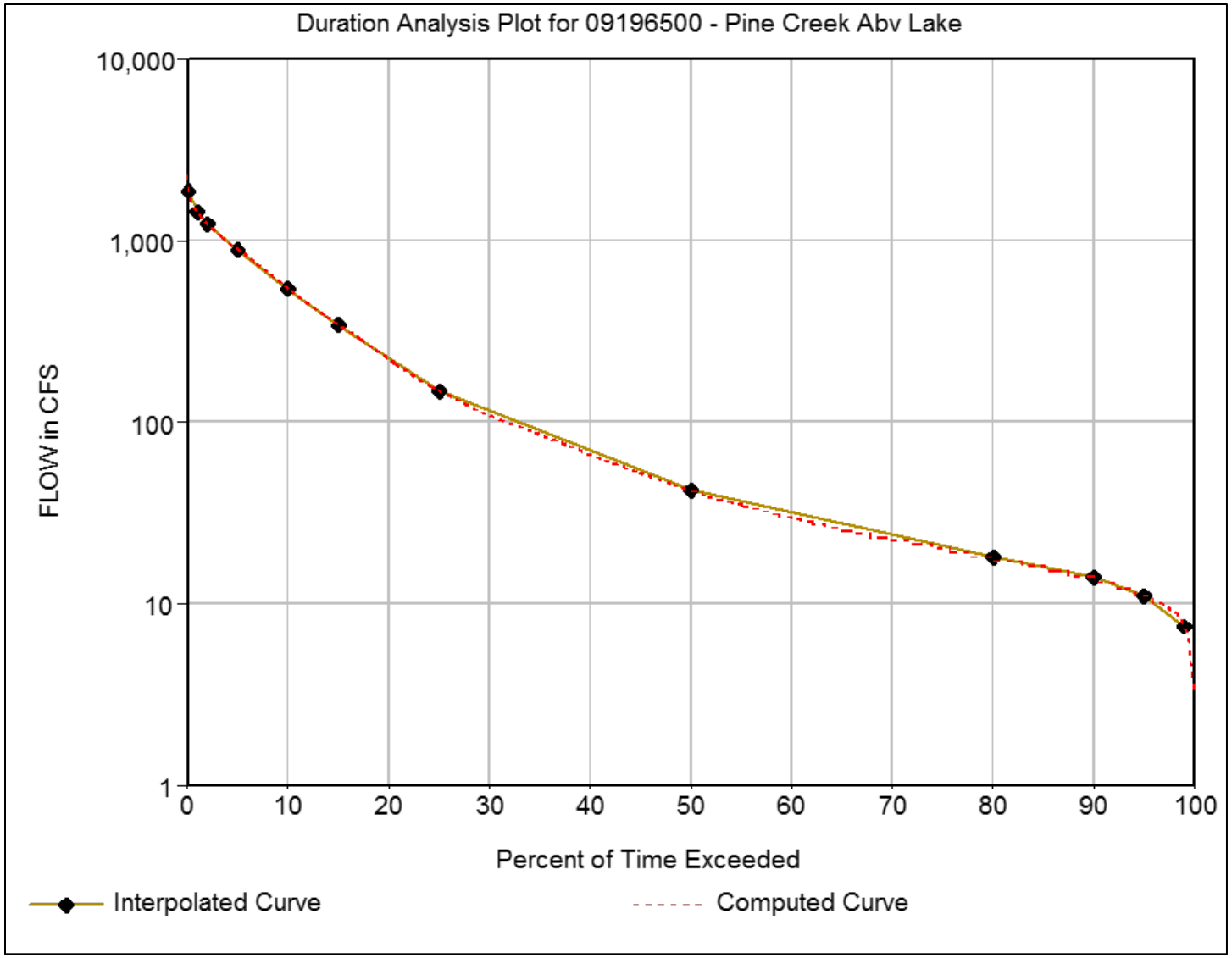

Figure G.10. Flow duration analysis for Pine Creek above Fremont Lake, WY (USGS Gage 09196500).

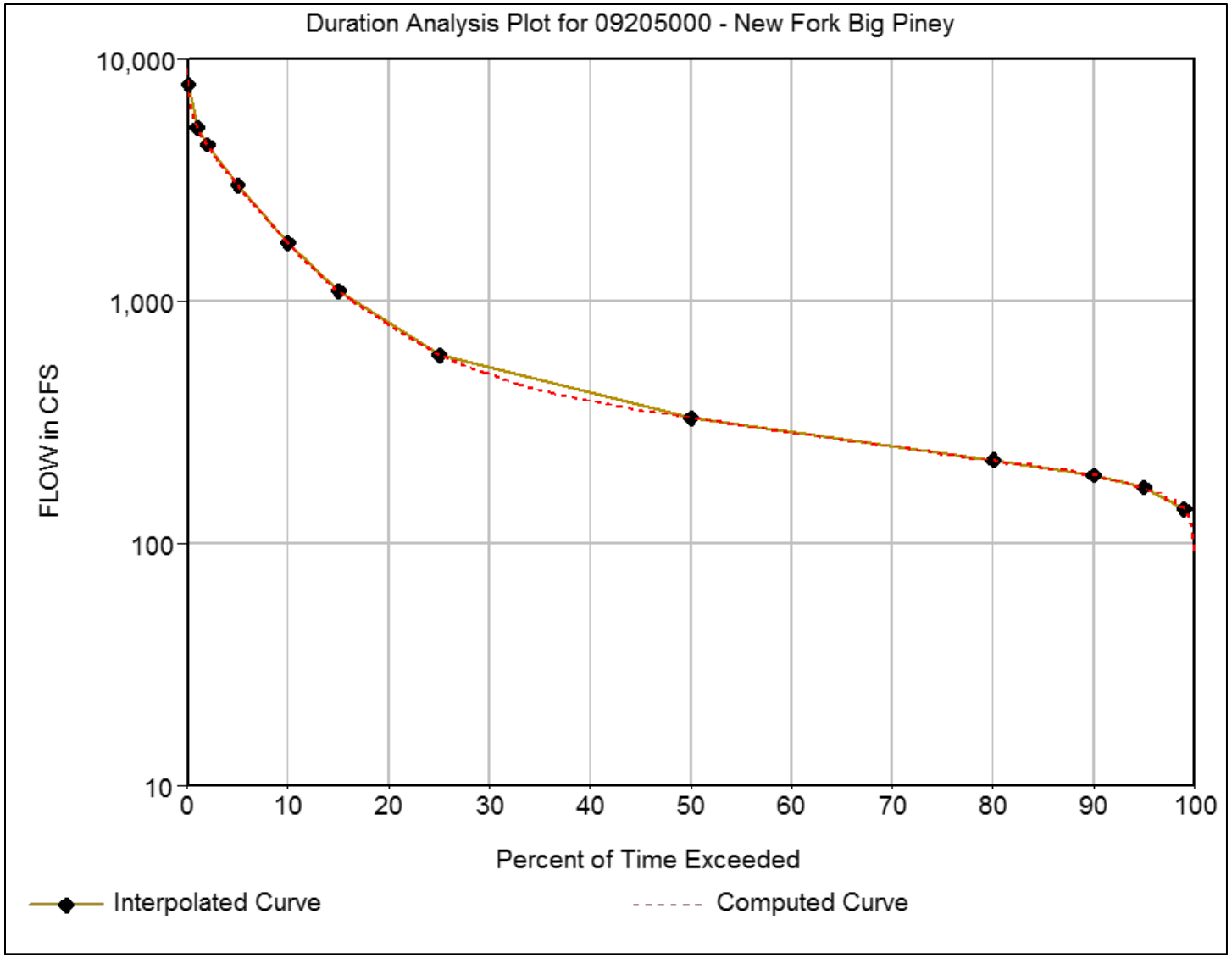

Figure G.11. Flow duration analysis for New Fork River near Big Piney, WY (USGS Gage 09205000).

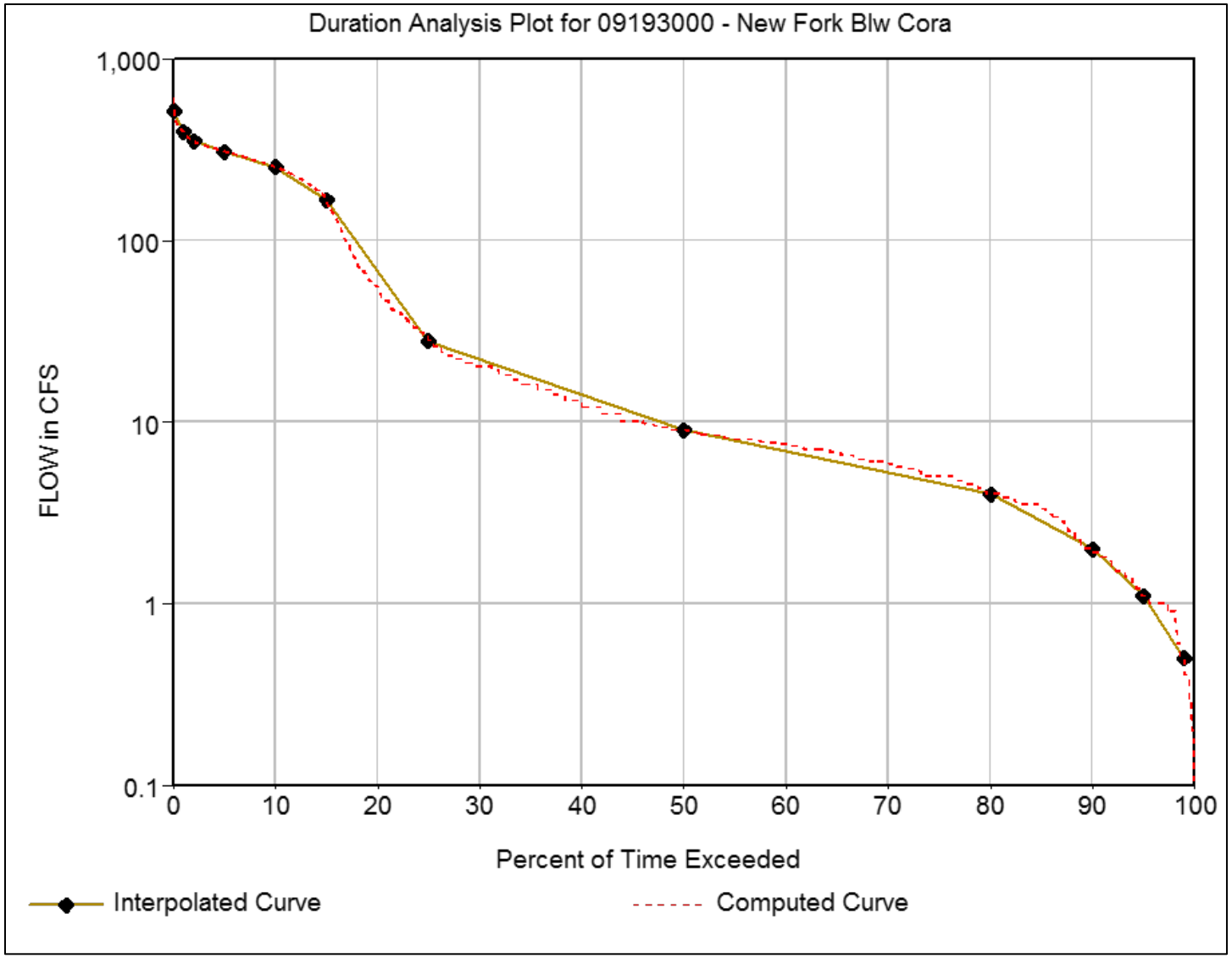

Figure G.12. Flow duration analysis for New Fork River below New Fork Lake, near Cora, WY (USGS Gage 09193000).

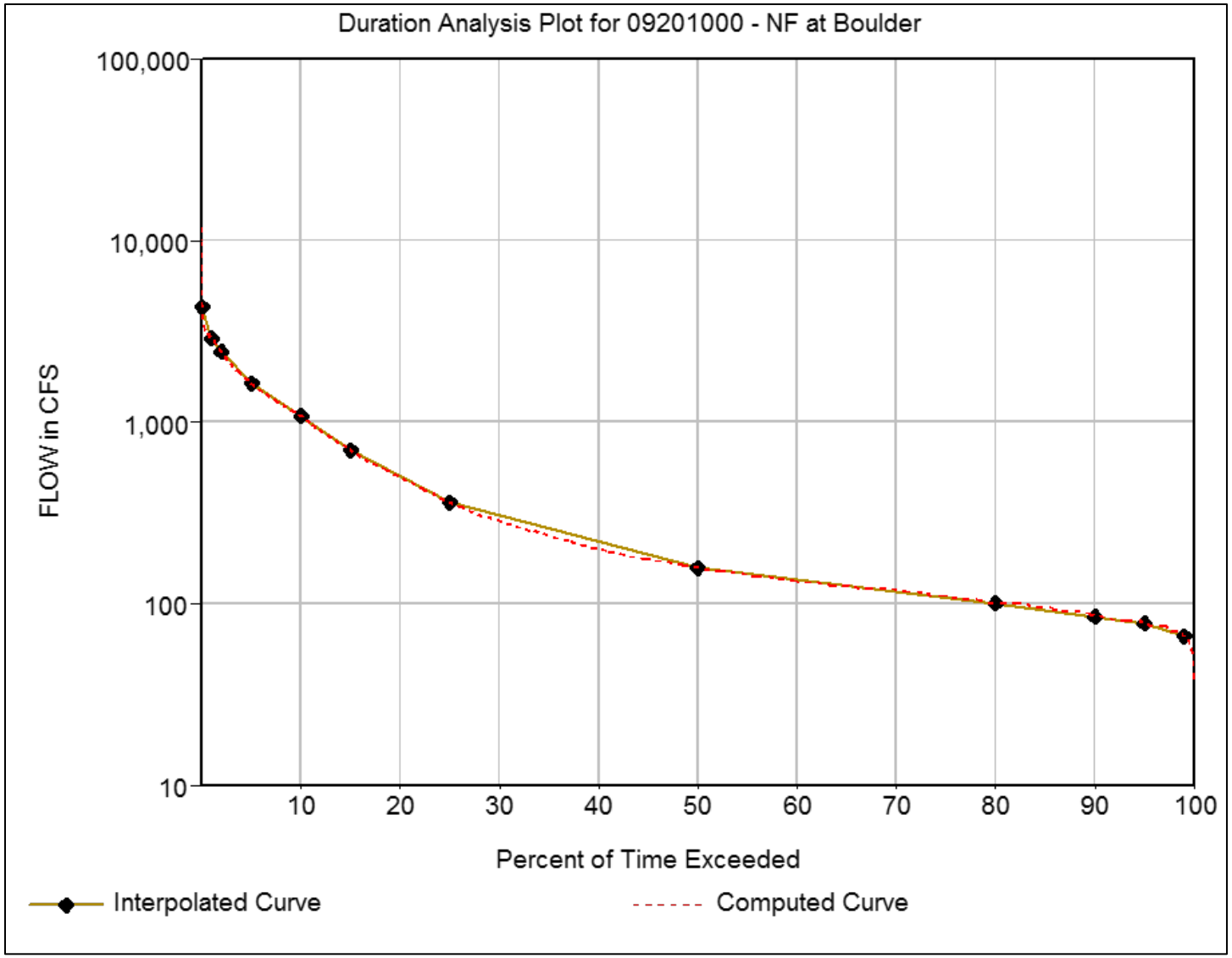

Figure G.13. Flow duration analysis for New Fork River near Boulder, WY (USGS Gage 09201000).

Appendix H.
Rosgen Stream Classification

Content

H.1 Introduction and Methods 4
H.2 Results Summary 6
H.3 New Fork River 8
H.4 Willow Creek 14
H.5 Lake Creek 16
H.6 Pine Creek 18
H.7 Pole Creek 19
H.8 Fall Creek 23
H.9 Boulder Creek 25
H.10 East Fork River 29
H.11 References 33

Tables

Table H.1. Summary of Rosgen stream type coverage and general characteristics 7
Table H.2. NFR Rosgen classification details 9
Table H.3. Willow Creek Rosgen classification details 15
Table H.4. Lake Creek Rosgen stream classification details 17
Table H.5. Pine Creek Rosgen stream classification details 19
Table H.6. Pole Creek Rosgen stream classification details 21
Table H.7. Fall Creek Rosgen stream classification details 24
Table H.8. Boulder Creek Rosgen stream classification details 26
Table H.9. East Fork River Rosgen stream classification details 30

Figures

Figure H.1. Broad level stream classification delineation showing longitudinal, cross-sectional and plan-views of major stream types. 4
Figure H.2. Layout of Strahler Stream Orders within New Fork River watershed..... 5
Figure H.3. Layout of Level I stream type classification within the New Fork River watershed..... 6
Figure H.4. Layout of NFR Rosgen stream classification. 8
Figure H.5. Photo looking downstream from Highway 123 crossing of the NFR at RM 46.4. Boulders placed against right bank protect against bank erosion..... 10
Figure H.6. Area of potential bank erosion along right (west) side of NFR..... 11
Figure H.7. Area of potential bank erosion along the NFR upstream of Paradise Road. 12
Figure H.8. Looking upstream along area of potential bank erosion at NFR RM 28.6. 13
Figure H.9. Looking downstream at low bank failure at NFR RM 6.2. 13
Figure H.10. Layout of Willow Creek Rosgen stream classification..... 14
Figure H.11. Looking downstream at heavy vegetation along Willow Creek at RM 1.4. 15
Figure H.12. Layout of Lake Creek Rosgen stream classification..... 16
Figure H.13. Layout of Pine Creek Rosgen stream classification. 18
Figure H.14. Looking downstream at coarse bed along Pine Creek at RM 6.2. 19
Figure H.15. Layout of Pole Creek Rosgen stream classification. 20
Figure H.16. Looking across at erosion along left (east) bank of Pole Creek at RM 14.4. 21
Figure H.17. Looking downstream at erosion along right (west) bank of Pole Creek at RM 0.7..... 22
Figure H.18. Layout of Fall Creek Rosgen stream classification. 23
Figure H.19. Area of potential bank erosion along left (south) side of Fall Creek..... 24
Figure H.20. Layout of Boulder Creek Rosgen stream classification..... 25
Figure H.21. Looking downstream at coarse bed of Boulder Creek at approximately RM 9..... 26
Figure H.22. Examples of instream structure locations in Boulder Creek..... 27
Figure H.23. Looking upstream at an instream structure installed in Boulder Creek at RM 0.8..... 28
Figure H.24. Layout of East Fork River Rosgen stream classification..... 29
Figure H.25. Looking downstream at the confluence of Muddy Creek (left) and East Fork River at RM 25.9. 31
Figure H.26. Looking upstream at fine material deposits along East Fork River at RM 0.2..... 32

Abbreviations and Acronyms

NFR	New Fork River
RM	river mile
SCCD	Sublette County Conservation District
SO	Strahler stream order

This page is left intentionally blank.

H.1 Introduction and Methods

Tetra Tech performed a *Level I Stream Classification* on the eight major rivers in the basin. The Level I classification integrates broad-scale topography, geologic data and aerial photography and organizes the watershed into general stream types (Rosgen and Silvey 1996). These stream types, labeled A through G, are designed to convey high-level information about the watershed in general and to potentially identify high-priority areas for further examination (**Figure H.1**). The Level I classification is generally a "desktop-based" study and relies on characteristics that can be discerned from general mapping information, such as sinuosity, channel slope, and width. As more detailed information is gained from ground surveys conducted during subsequent classification efforts (e.g., Level II, Level III), original stream types may be revised.

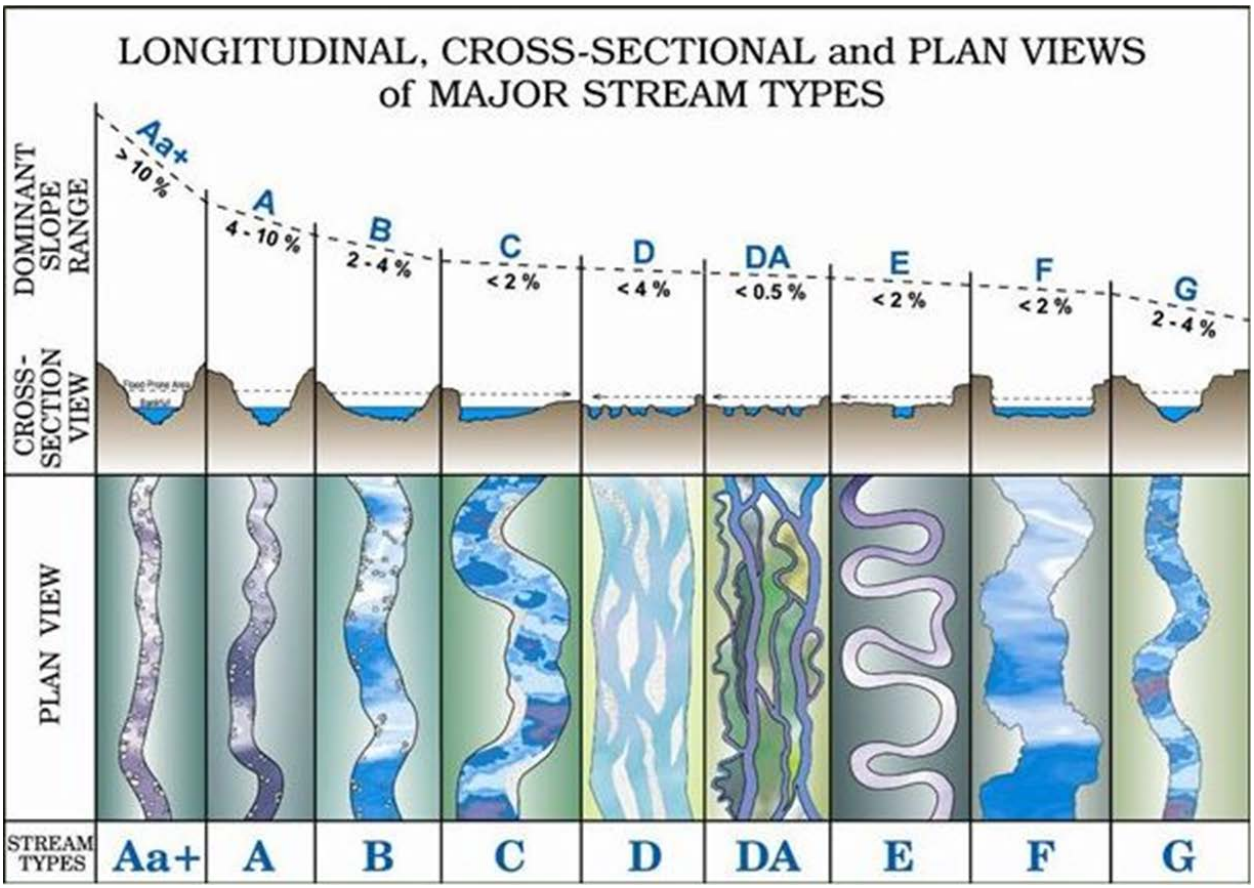

Source: Rosgen and Silvey 1996

Figure H.1. Broad level stream classification delineation showing longitudinal, cross-sectional and plan-views of major stream types.

Digital topographic data of the current existing conditions were obtained from the U.S. Geological Survey's National Elevation Database. The data are raster grids with 10-meter pixel-size. High-resolution aerial photography was obtained from the U.S. Department of Agriculture's National Aerial Imagery Program that was available for 2006, 2009, 2012, and 2015. Additional aerial imagery from 1980 and 1954 was located, but had insufficient resolution to be useful for the classification. The topographic data was used to generate streamflow lines and calculate the appropriate Strahler Stream Order (SO) (Strahler 1952, 1957) (**Figure H.2**). The most extreme areas of the upper watershed are defined by stream orders SO-1 through SO-6 and represent small channels or gulleys that are either intermittent or perennial.

Consolidation of flow occurs with stream order SO-7 and SO-8. The eight major streams in the basin form with a stream order of SO-9 or SO-10. These streams converge and the final stream order at the outlet of the watershed is SO-12.

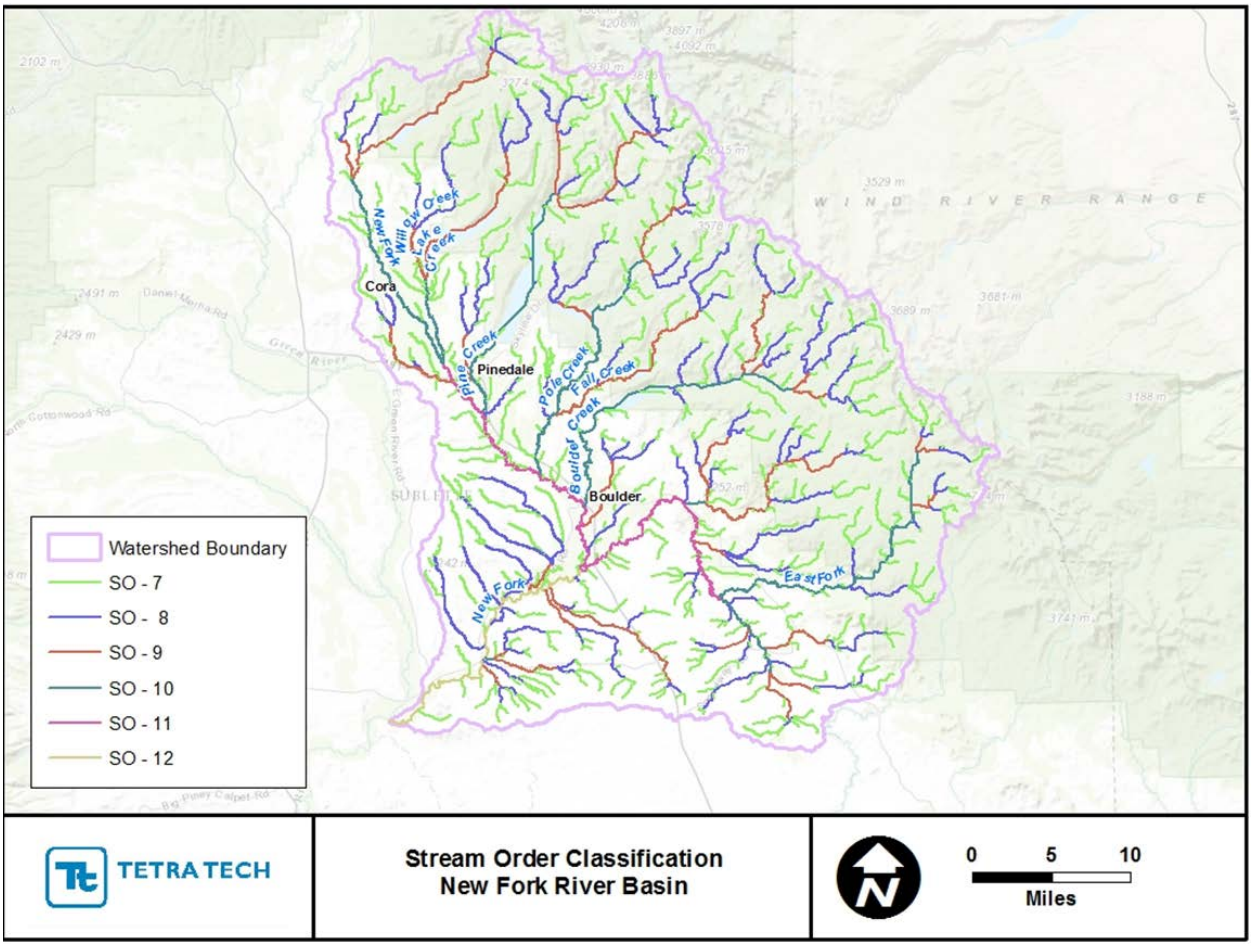

Figure H.2. Layout of Strahler Stream Orders within New Fork River watershed.

After Strahler stream order was determined, the *Level I Stream Classification* was carried out from the mouth of each stream (i.e., downstream end) to the outlet of the lake (i.e., upstream end). For two of the streams, Willow Creek and East Fork River, no such lake exists; therefore, each was classified to the point in the headwaters where the stream order was approximately SO-7.

Along each stream, sub-reaches were delineated based on changes in slope, sinuosity, channel and meander width, and structural controls. Streamlines were laid out based on the digital topographic data, as mentioned previously, and in some cases do not match the aerial photography. The general effect is that calculated slopes might be slightly steeper and calculated sinuosity might be lower than a field survey concludes. Additionally, reasonable channel depths were not possible to obtain from the available 10-meter resolution topographic data, eliminating the ability to assess any entrenchment ratios. These limitations of the data are not expected to have a significant impact on this Level I classification.

H.2 Results Summary

A total of about 192 miles of stream channel was classified according to Rosgen (**Figure H.3**). Stream type was assigned based on the dominant characteristics of each type. As these characteristics exist on a spectrum, some sub-reaches can exhibit characteristics of more than one stream type. Information from future detailed surveys could result in a reclassification of a particular sub-reach. Similarly, each stream type is associated with generalized trends relating to aggradation/degradation, bank stability, planform movement, channel structure, and sediment transport efficiency (Rosgen and Silvey 1996). That is not to say that all sub-reaches classified as the same type will share all of the same trends. Additional factors not accounted for in the initial classification could prove to be the dominant driver of stream behavior. The primary benefit of the Level I classification effort is to present a high-level inventory of watershed-scale characteristics and set priorities for more detailed assessments.

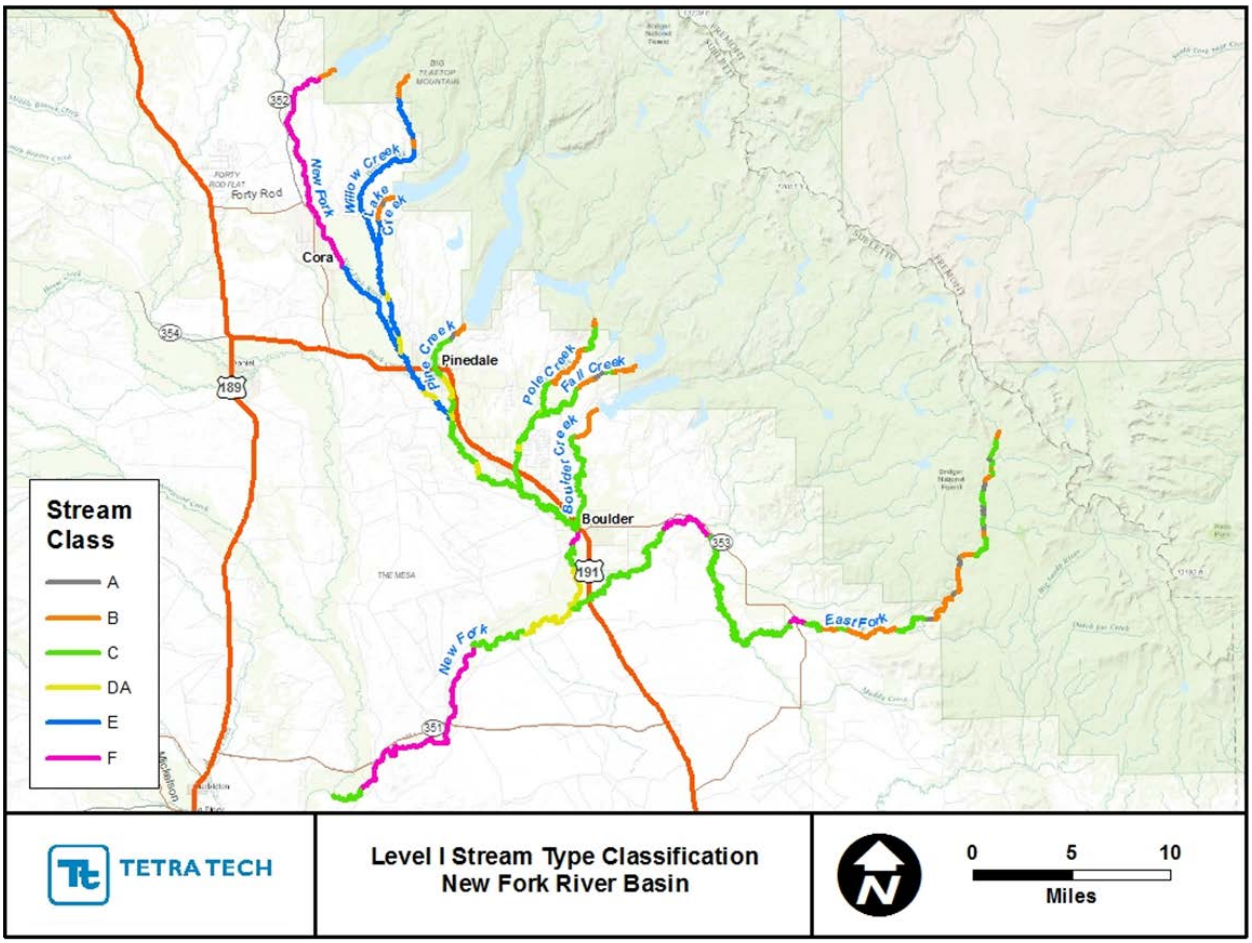

Figure H.3. Layout of Level I stream type classification within the New Fork River watershed.

A summary of the classification results is presented in **Table H.1**. Approximately 45 percent of the classified area is Type C, generally associated to be meandering channels with regular riffle/pool sequences, active point bars and regular floodplain connectivity. About 23 percent of the classified stream length is Type E or F, which describe meandering channels that are entrenched in their planform and potentially evolved in response to some change in the local hydrologic or sediment regime. About 14 percent of the evaluated stream length was classified as Type A or B, which primarily occurs in the confined valleys of the upper watershed.

Table H.1. Summary of Rosgen stream type coverage and general characteristics

STREAM TYPE	PERCENT COVERED	DESCRIPTION
A	2%	Steep, step/pool system, generally confined to narrow valleys with bedrock controls that limit planform change over time
B	12%	Generally a transition zone from steep confined zones to open, meandering channels. Channel changes are expected only during large flow events
C	45%	Well formed, meandering channel that might move laterally overtime. Generally expected to be in balance with long-term trends in flow and sediment supply that is, in part, maintained by floodplain connectivity. Instability can be introduced by changes to hydrologic or sediment regime.
DA	8%	Multi-thread system with well-formed and vegetated islands throughout. Avulsions between channels might occur, but lateral migration is expected to be low.
E	16%	Highly meandering, entrenched planform. Some flooding of the overbanks is expected. Generally considered the stable result of an adjustment to change in the hydrologic or sediment regime.
F	17%	Meandering and incised channel generally disconnected from the larger floodplain

H.3 New Fork River

The New Fork River (NFR) flows out of New Fork Lake for approximately 2 miles through a moderately steep, confined valley (**Figure H.4** and **Table H.2**) as a Type B stream. Classification of the remainder of the study reach reveals the majority of the length, about 55 percent is an entrenched Type E or F channel, about 32 percent is Type C and the remainder (13 percent) is an anastomosed Type DA.

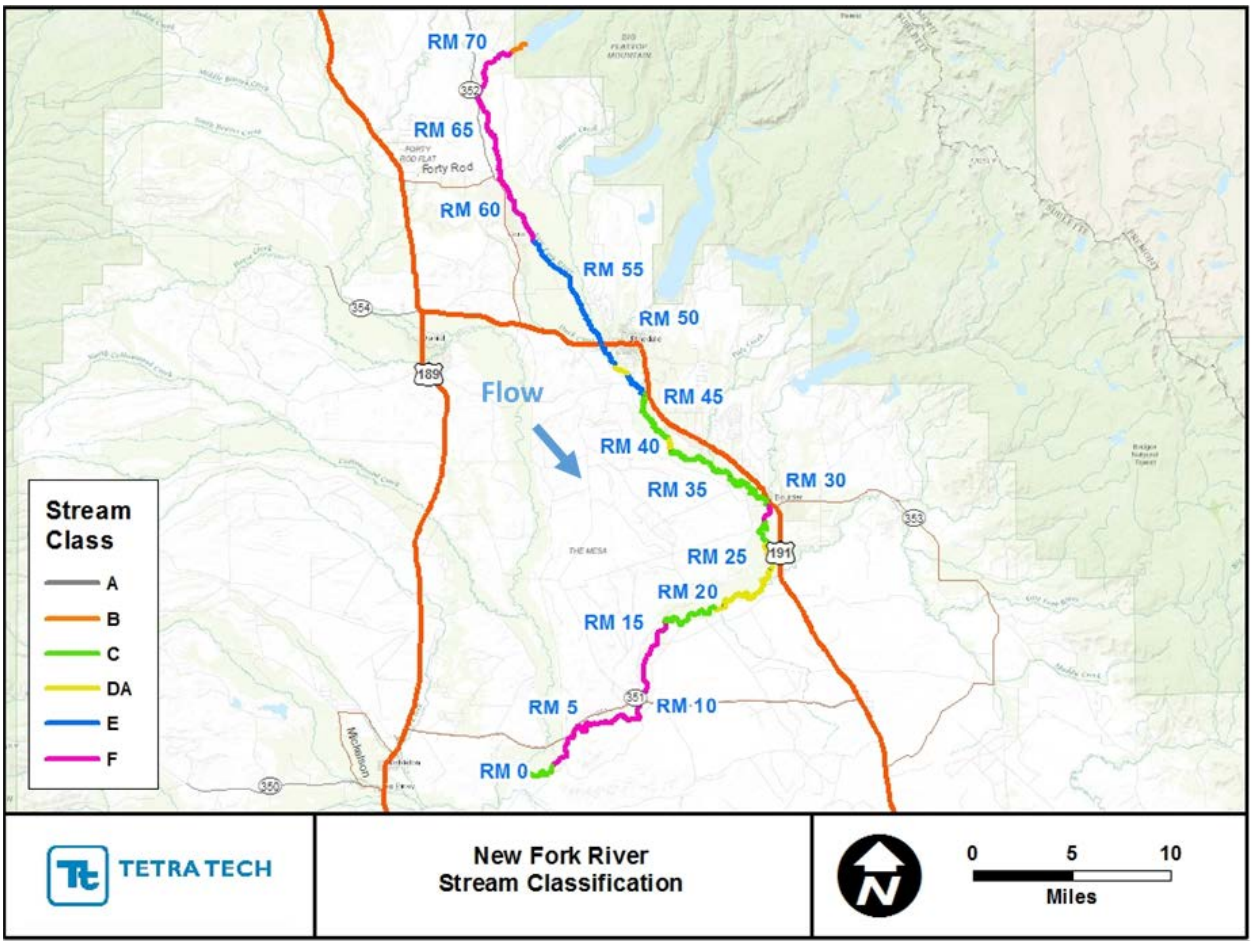

Figure H.4. Layout of NFR Rosgen stream classification.

Table H.2. NFR Rosgen classification details

STARTING RM	ENDING RM	SINUOSITY	SLOPE	CHANNEL WIDTH (FEET)	STREAM CLASS
0	2.3	1.64	0.1%	150	C
2.3	15.4	1.34	0.1%	150	F
15.4	19.5	1.63	0.1%	150	C
19.5	23.8	1.63	0.1%	125	DA
23.8	26.8	1.63	0.1%	80	DA
26.8	28.9	1.49	0.1%	110	C
28.9	30	1.41	0.2%	125	F
30	36.7	1.88	0.1%	80	C
36.7	39.9	1.42	0.2%	75	C
39.9	40.8	1.52	0.2%	50	DA
40.8	44.9	1.44	0.2%	65	C
44.9	47.3	1.79	0.3%	30	E
47.3	48.4	1.38	0.3%	30	DA
48.4	49.6	1.43	0.3%	50	E
49.6	51.3	1.47	0.4%	30	E
51.3	58	1.98	0.4%	20	E
58	67.8	1.39	0.4%	45	F
67.8	70.6	1.31	1.3%	40	F
70.6	71.7	1.22	0.9%	40	B

Below river mile (RM) 70.6, the channel emerges into a wider, low-relief valley and has a meandering planform for an additional 10 miles. Significant lateral migration of the channel is unlikely in this area due to the entrenched nature and heavy vegetation along each bank. Additionally, there appear to be multiple grade control structures that would serve to reduce downcutting. A noticeable increase in sinuosity and decrease in channel width occurs near the town of Cora at RM 58, which is most likely the result of the multiple upstream diversions. Dry antecedent channels and abandoned oxbow channels in this section indicate a tendency for some channel avulsion and lateral migration. The reduction of flow in the channel from irrigation canals could reduce the likelihood of such occurrences from historical levels, but sensitive infrastructure might warrant protection.

The confluence with Willow Creek at RM 51.3 and potential irrigation return flows increase the channel width downstream to about 50 feet. Bank protection has been placed downstream of the crossing of Highway 123 at RM 46.4, and examination of photos taken by Sublette County Conservation District (SCCD) indicate it appears to be effective (**Figure H.5**). Below the confluence with Pine Creek at RM 45, the channel becomes more laterally active and varies between a highly sinuous single thread, and anastomosed multi-thread channel. In the area around RM 43.5 the main channel runs against the right confining valley wall, potentially eroding the steep bank (**Figure H.6**). This behavior does not appear to immediately threaten any structures, although the crossing of Moorcroft Road might require a more detailed examination. At the confluence with Pole Creek at RM 36.6, the channel width increases significantly to an average of about 125 feet. The highly sinuous channel appears to support large wetlands in the abandoned meander bends across the valley. The intersection of Paradise Road and Highway 191 appears to constrain the river just above the confluence with Boulder Creek at RM 30 and could benefit from a stability evaluation (**Figure H.7**). Downstream of the confluence with Boulder Creek, the valley widens considerably and the river runs against the high bank on the right side from about RM 29 to RM 27.

Source: SCCD

Figure H.5. Photo looking downstream from Highway 123 crossing of the NFR at RM 46.4. Boulders placed against right bank protect against bank erosion.

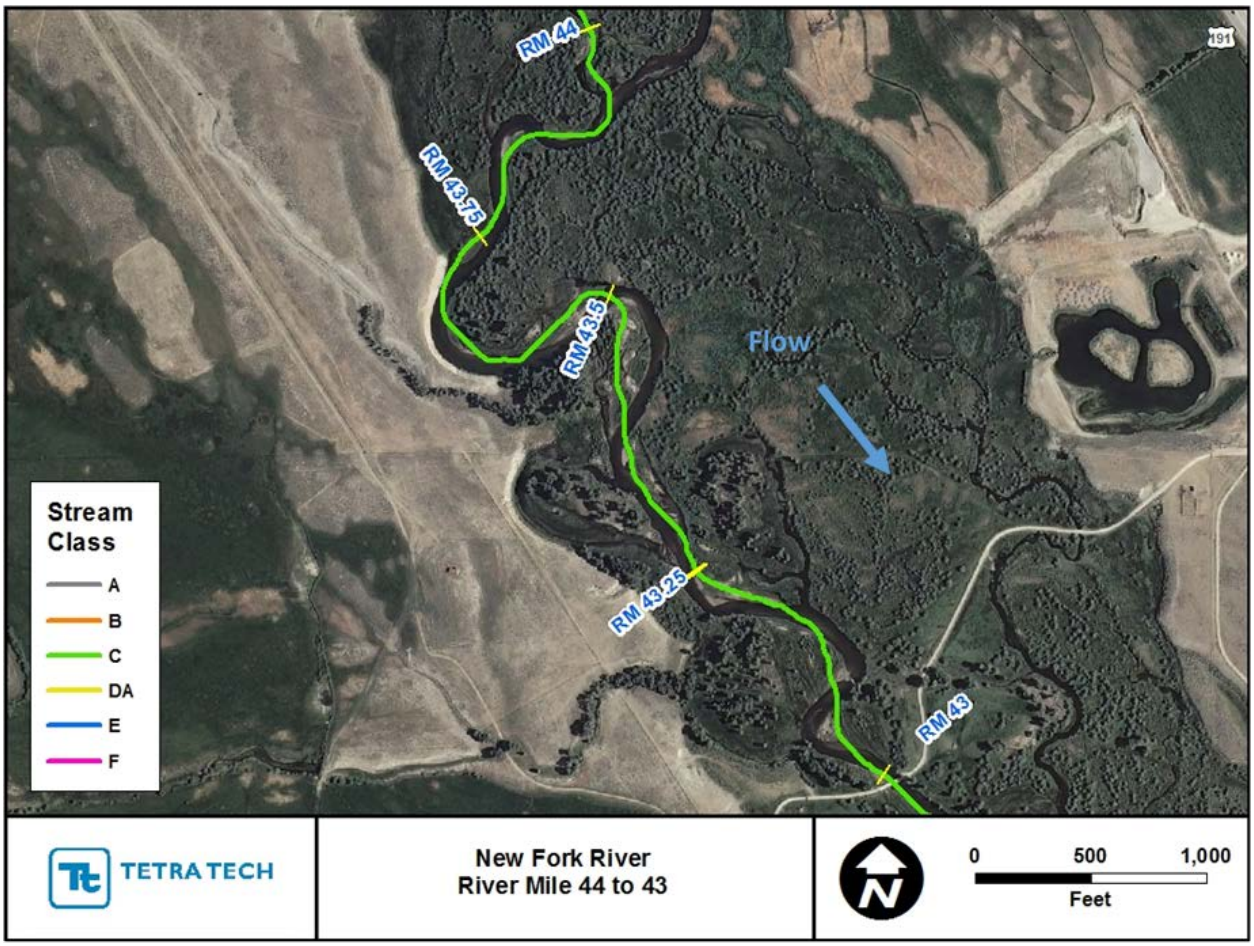

Figure H.6. Area of potential bank erosion along right (west) side of NFR.

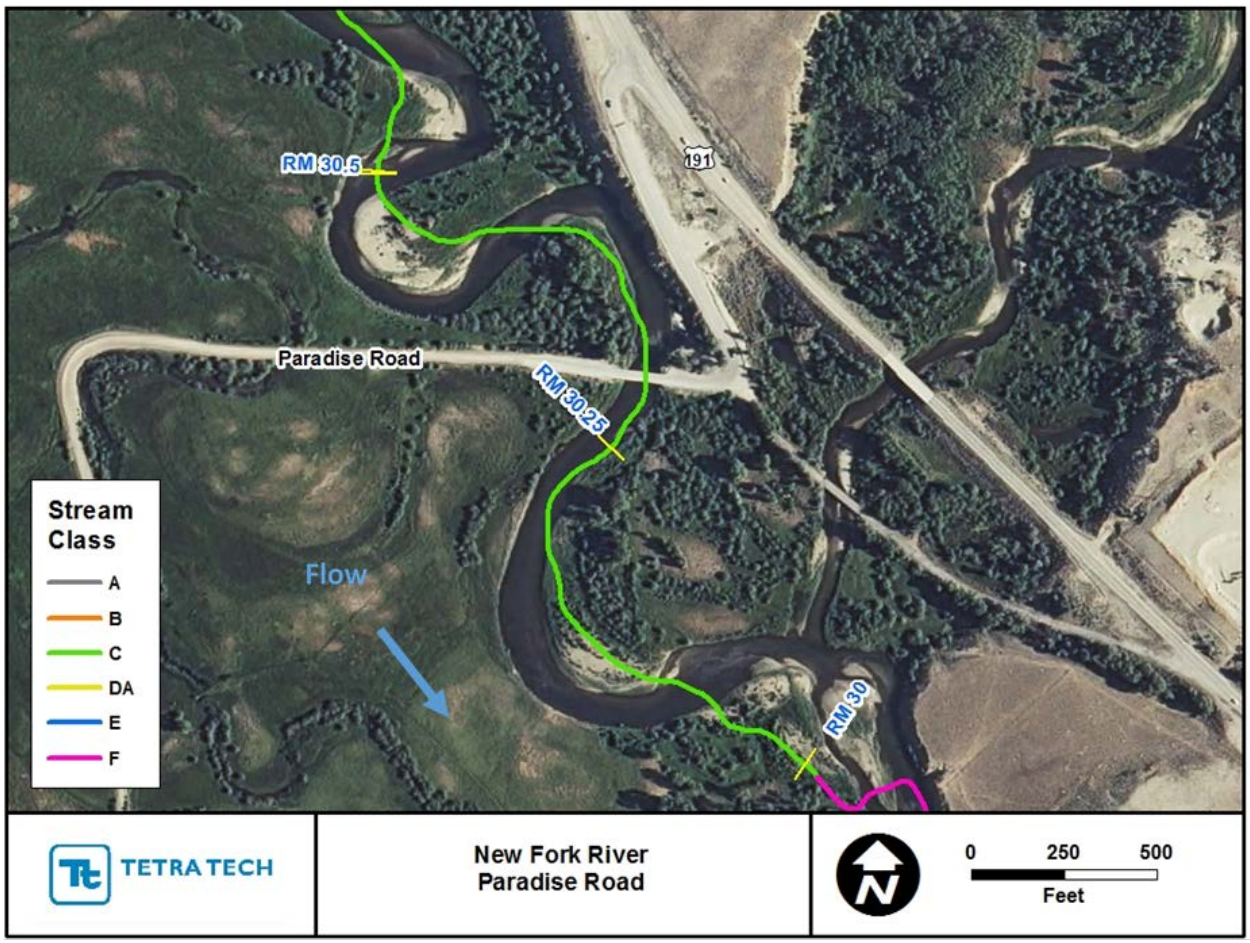

Figure H.7. Area of potential bank erosion along the NFR upstream of Paradise Road.

Photos taken by SCCD show banks in this area are steep and vegetated, indicating that they might be actively eroding (**Figure H.8**). This could be an area to evaluate for bank protection if the threatened property loss is significant. Below this location the main channel meanders through the center of the valley until the confluence with the East Fork River at RM 23.8. Downstream of this location, the river runs against the left bank; historical aerial photos indicate there has been some level of bank erosion between about RM 23.5 and RM 22.5. The river valley narrows significantly below this location and the river becomes more entrenched and uniform. Historical and recent aerial photography does not indicate any recent lateral movement, but failure of the low-bank might indicate some channel adjustment is taking place (**Figure H.9**). As the river emerges from the narrowed valley at RM 2.9, it becomes less entrenched and appears to actively migrate across the larger floodplain of the Green River to the confluence.

Source: SCCD

Figure H.8. Looking upstream along area of potential bank erosion at NFR RM 28.6.

Source: SCCD

Figure H.9. Looking downstream at low bank failure at NFR RM 6.2.

H.4 Willow Creek

Willow Creek forms at the outlet of Rainbow Lake at an elevation of about 10,000 feet, and accumulates a number of tributaries as it descends at a fairly consistent slope for 2,000 feet as a Type B stream (**Figure H.10** and **Table H.3**). Below this area the channel is an entrenched Type E channel with some anastomosed Type DA sections. Downstream of the Willow Creek Guard Station at RM 18.7, the valley flattens considerably and the river meanders significantly for about 2.5 miles before descending through a confined canyon. A number of irrigation canals are located in this reach and mark the first signs of water development. The broad-scale character of the river changes very little over the 15 miles down to the confluence with the NFR. The channel is highly sinuous and moderately entrenched. Heavy vegetation along the banks most likely limits gradual lateral migration across the floodplain (**Figure H.11**), although high flow events could lead to channel avulsions. There appear to be few areas where channel instability might threaten property or infrastructure. The most likely occurrence would be that some developed crossings might be damaged during high-flow events.

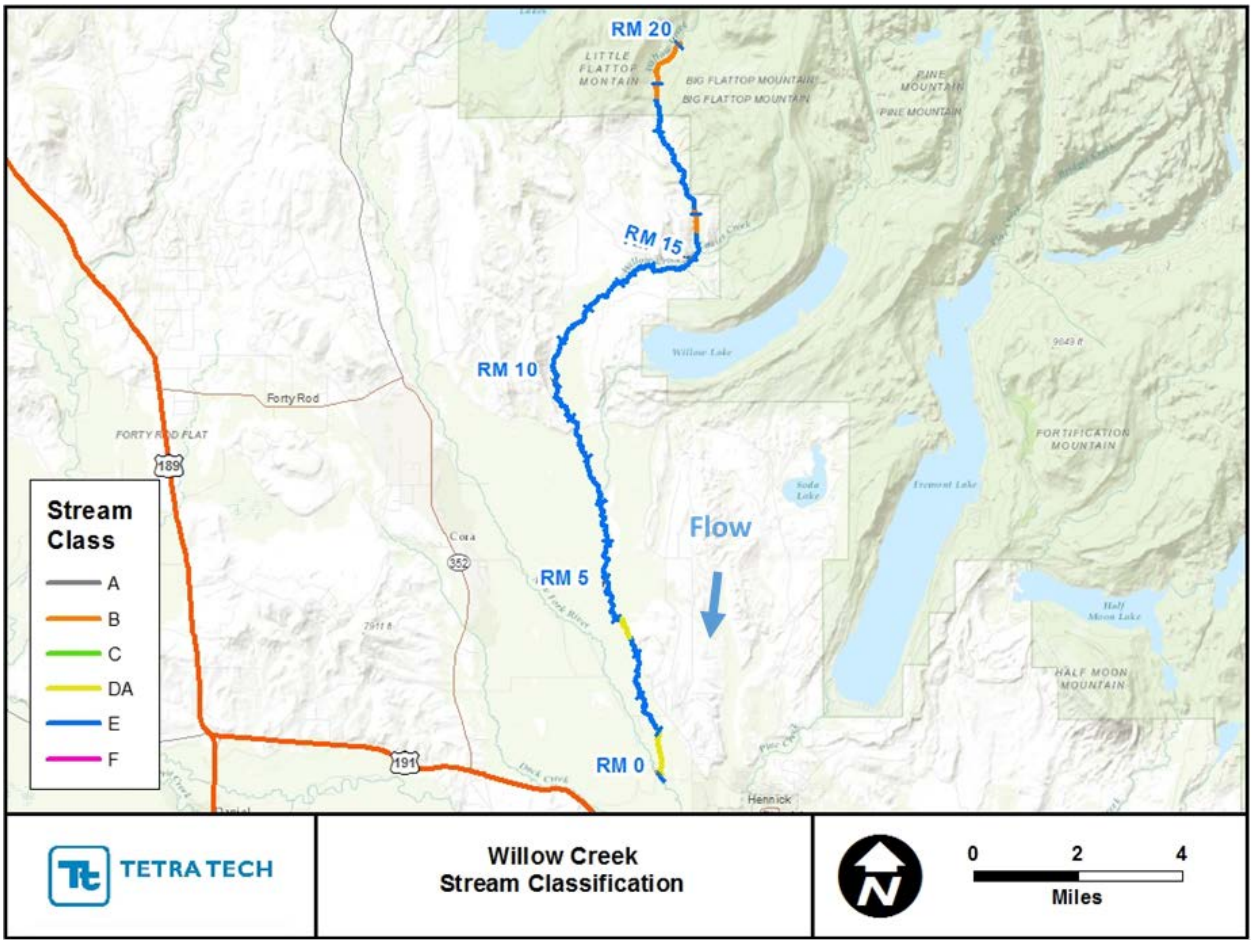

Figure H.10. Layout of Willow Creek Rosgen stream classification.

Table H.3. Willow Creek Rosgen classification details

STARTING RM	ENDING RM	SINUOSITY	SLOPE	CHANNEL WIDTH (FEET)	STREAM CLASS
0	1.1	1.29	0.4%	25	DA
1.1	2.6	1.47	0.3%	25	E
2.6	3.4	1.5	0.2%	25	E
3.4	4	1.48	0.3%	25	DA
4	7.1	1.51	0.3%	30	E
7.1	11.6	1.68	0.4%	15	E
11.6	13.3	1.41	0.4%	10	E
13.3	15.6	1.32	0.8%	10	E
15.6	16.1	1.19	3.2%	<10	B
16.1	17	1.4	1.5%	<10	E
17	17.3	1.36	0.6%	<10	E
17.3	18.7	1.38	1.1%	<10	E
18.7	19.7	1.34	2.1%	<10	B
19.7	20	1.14	4.2%	<10	B

Source: SCCD

Figure H.11. Looking downstream at heavy vegetation along Willow Creek at RM 1.4.

H.5 Lake Creek

Lake Creek flows out of the west end of Willow Lake (**Figure H.12** and **Table H.4**). The 1.5 mile descent through a steep, confined canyon contains both Type A and B streams and a number of irrigation canal connections. However, the pool/drop morphology is unlikely to be affected by the flow removal. Emerging into a broader valley at about RM 1.7, the river becomes moderately sinuous Type E stream and develops an entrenched character similar to the lower reaches of Willow Creek. There is little development in the 1.5 miles downstream to the confluence with Willow Creek, so mitigation for erosional areas is probably limited.

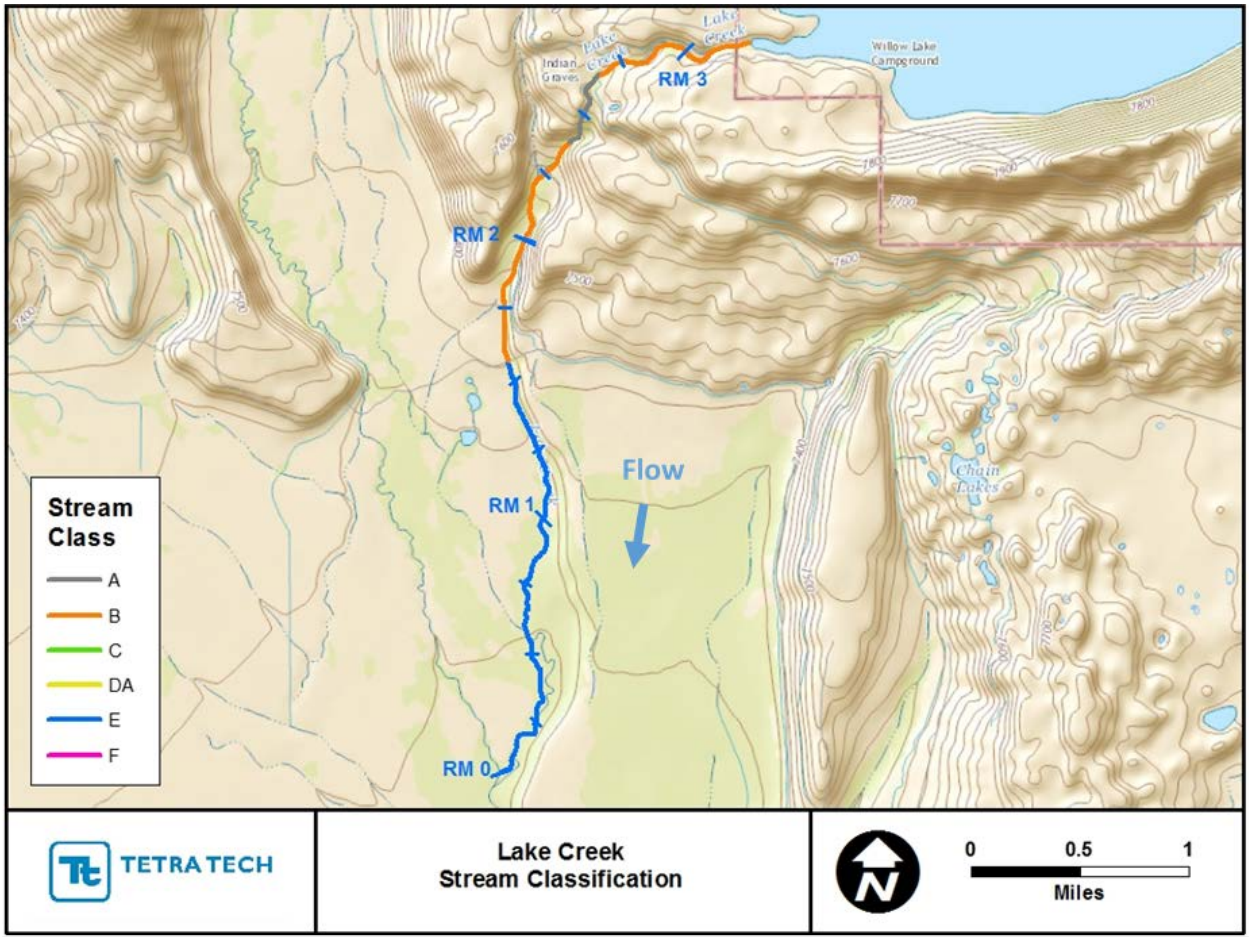

Figure H.12. Layout of Lake Creek Rosgen stream classification.

Table H.4. Lake Creek Rosgen stream classification details

STARTING RM	ENDING RM	SINUOSITY	SLOPE	CHANNEL WIDTH (FEET)	STREAM CLASS
0	1.1	1.59	0.3%	35	E
1.1	1.6	1.25	1.0%	25	E
1.6	1.9	1.06	1.9%	15	B
1.9	2.2	1.14	2.9%	10	B
2.2	2.4	1.09	4.4%	<10	B
2.4	2.7	1.17	9.9%	<10	A
2.7	3.2	1.11	2.1%	30	B

H.6 Pine Creek

Pine Creek out of Fremont Lake is a controlled outlet, and the creek immediately begins flowing through developed, residential areas (**Figure H.13** and **Table H.5**). The coarse substrate and mature vegetation along the banks of the Type A and B sections likely limits channel adjustment (**Figure H.14**), and a number of grade control structures prevent downcutting. Below RM 6.2, the channel is a Type C with some Type DA sections. As the river flows through the north end of Pindedale, the width ranges from 40 to 60 feet and the planform has a number of significant meander bends. Vegetation and cohesive bank materials between RM 6 and RM 4 might provide some resistance to lateral migration, but a closer examination of some more vulnerable properties in the area might be appropriate. Encroachment of development in the river floodplain is not severe through the town of Pinedale, although the section is straighter compared to upstream and downstream reaches. More detailed information is necessary to determine if the channel is naturally straighter or if it formed in response to development activities. Downstream of town, between about RM 3.5 and RM 1.5 the river develops into a multi-thread system. In this area, multiple channels could reduce the likelihood of dramatic channel change that threatens private property by distributing erosive forces across a wider area. Downstream of this area to the confluence with the NFR, the channel returns to a single thread and appears to have historically migrated throughout the available NFR floodplain.

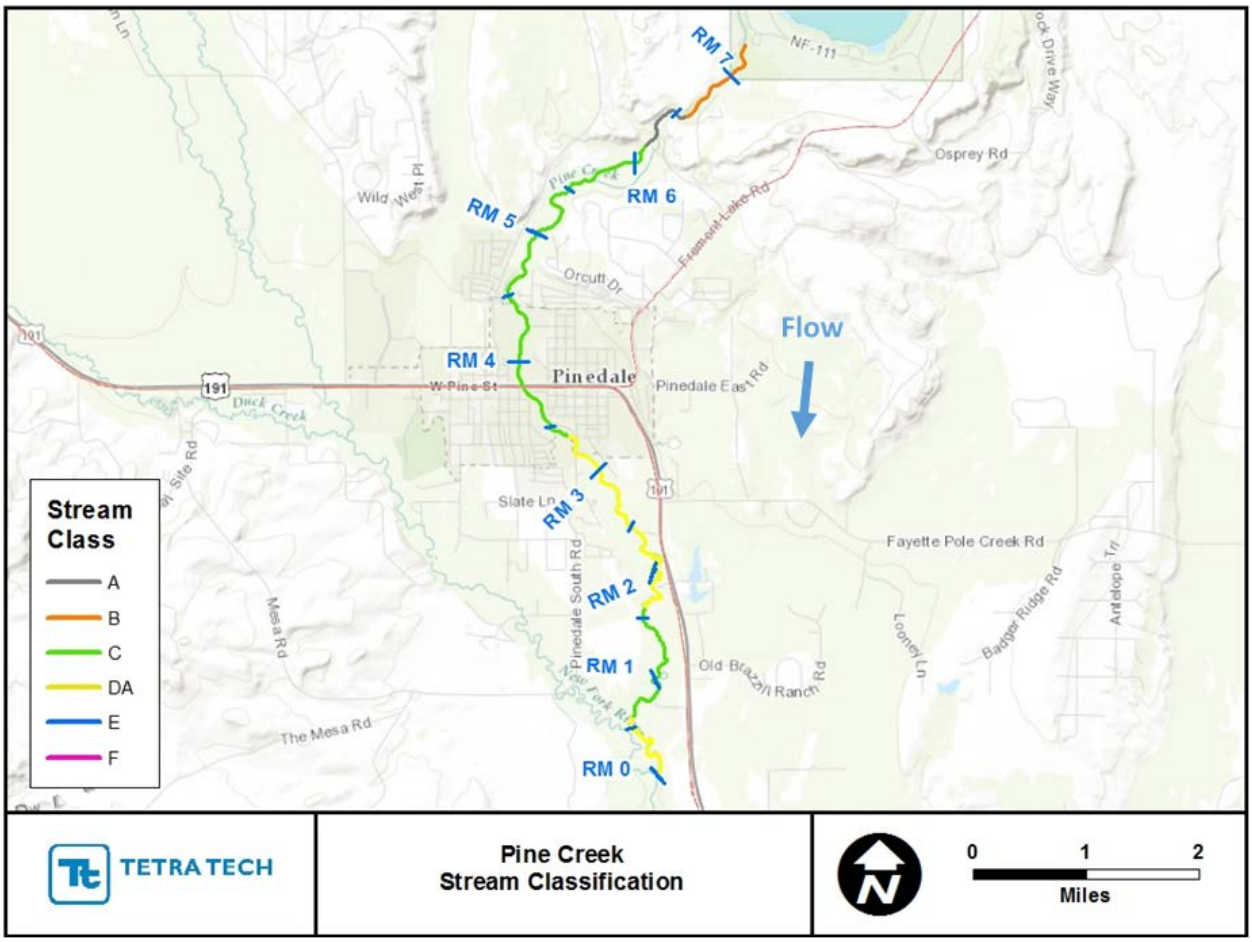

Figure H.13. Layout of Pine Creek Rosgen stream classification.

Table H.5. Pine Creek Rosgen stream classification details

STARTING RM	ENDING RM	SINUOSITY	SLOPE	CHANNEL WIDTH (FEET)	STREAM CLASS
0	0.6	1.57	0.3%	60	DA
0.6	1	1.48	0.3%	60	C
1	1.6	1.41	0.3%	60	C
1.6	3.4	1.46	0.4%	30	DA
3.4	3.8	1.19	0.7%	40	C
3.8	4.4	1.2	0.4%	40	C
4.4	5.1	1.27	0.7%	40	C
5.1	6.2	1.46	0.9%	65	C
6.2	6.6	1.12	5.4%	65	A
6.6	7.3	1.23	0.8%	65	B

Source: SCCD

Figure H.14. Looking downstream at coarse bed along Pine Creek at RM 6.2.

H.7 Pole Creek

Pole Creek flows out of Little Half Moon Lake and alternates between a steep, confined channel (Type B) and a meandering system (Type C") until about RM 10 (**Figure H.15** and **Table H.6**). Below RM 10, the

channel is a Type C with some Type DA sections. Some evidence of bank erosion exists among the meander bends and might warrant further inspection to determine if it needs to be mitigated (**Figure H.16**). Downstream of Fall Creek Road, the valley widens and the channel becomes highly sinuous with a pattern of regular point bars, pools, and riffles; it is bound by a floodplain that is inundated by regular high flows. This channel structure continues until downstream of the confluence with Fall Creek at RM 6.9, where it appears to become somewhat more entrenched over the remainder of the reach down to the confluence with the NFR. Active point bars exist, but overbank flow is probably less common than upstream. It is possible that the absence of overbank flows has led to higher concentration of flows in the main channel, which in turn has caused bank erosion and an increase in width (**Figure H.17**). It might be appropriate to examine this area in more detail to determine if this response is problematic.

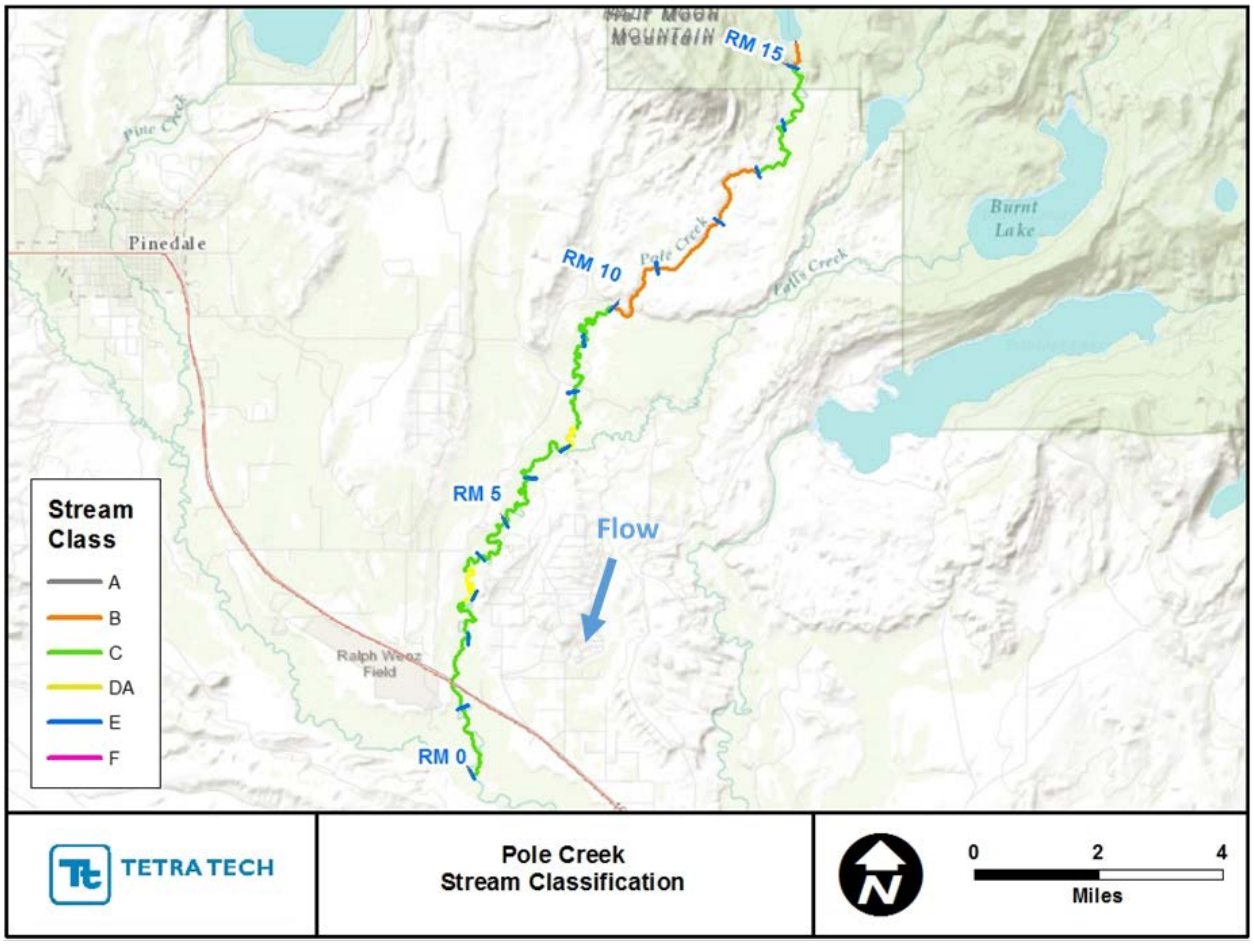

Figure H.15. Layout of Pole Creek Rosgen stream classification.

Table H.6. Pole Creek Rosgen stream classification details

STARTING RM	ENDING RM	SINUOSITY	SLOPE	CHANNEL WIDTH (FEET)	STREAM CLASS
0	1.4	1.6	0.3%	60	C
1.4	2.4	1.59	0.2%	60	C
2.4	2.8	1.59	0.3%	60	C
2.8	3.7	2.14	0.2%	60	DA
3.7	6.9	2.13	0.2%	60	C
6.9	7.5	1.73	1.8%	40	DA
7.5	10	1.83	2.6%	40	C
10	13	1.21	1.8%	40	B
13	15	1.37	1.1%	50	C
15	15.3	1.15	2.8%	40	B

Source: SCCD

Figure H.16. Looking across at erosion along left (east) bank of Pole Creek at RM 14.4.

Source: SCCD

Figure H.17. Looking downstream at erosion along right (west) bank of Pole Creek at RM 0.7.

H.8 Fall Creek

Fall Creek flows fairly steeply out of Burnt Lake to about RM 4.5 (**Figure H.18** and **Table H.7**) primarily as Type A and Type B streams. Downstream of RM 4.5, the channel transitions to a Type C. As the valley slope decreases, the sinuosity of the channel increases because the planform is less constrained by the valley walls. Downstream of Fayette Pole Creek Road at RM 2, the channel runs against the valley wall along the left (south) bank (**Figure H.19**). The river could erode a portion of this area over time, although it does not appear to threaten any infrastructure. Downstream of this area, the channel moves back towards the center of the valley and converges with Pole Creek.

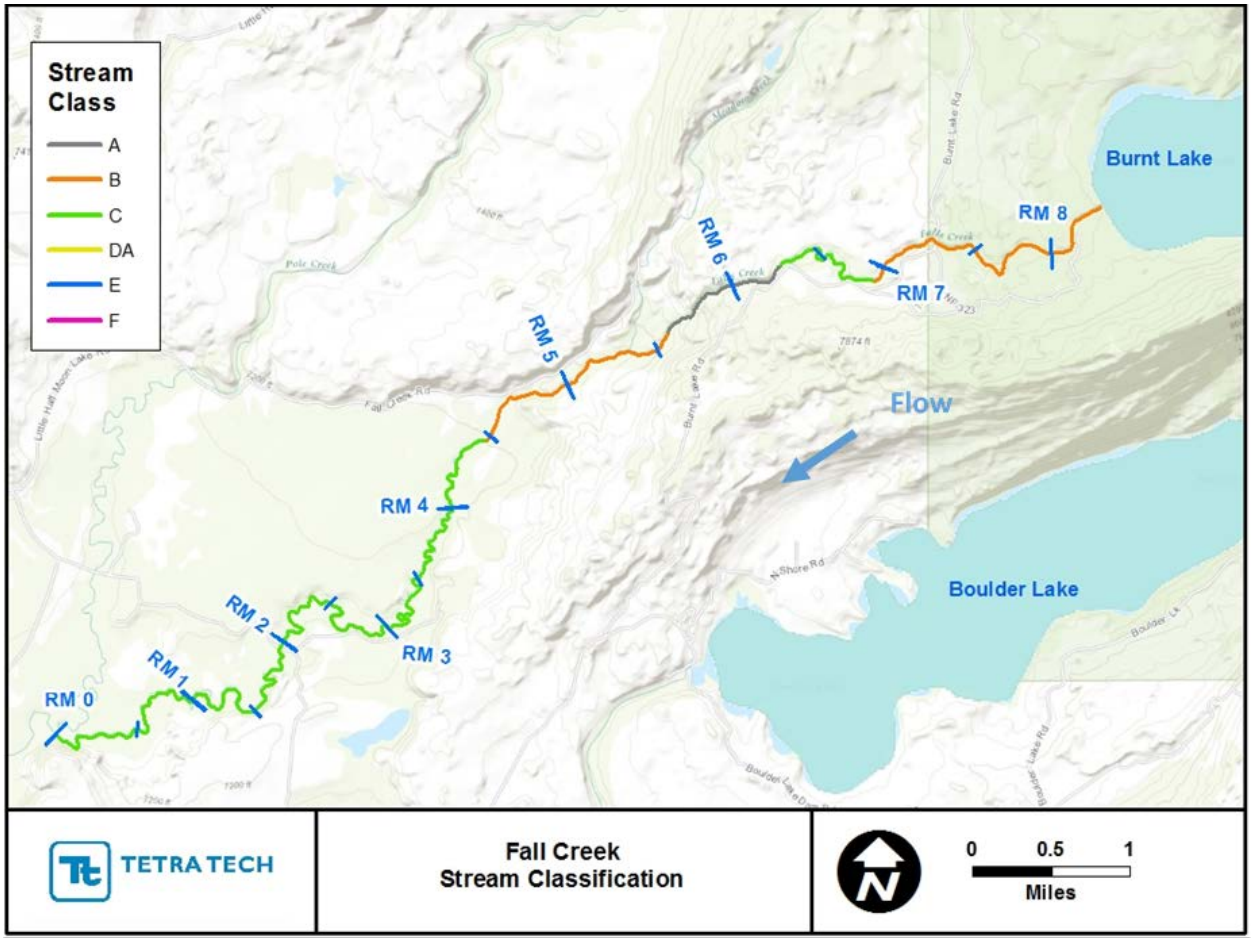

Figure H.18. Layout of Fall Creek Rosgen stream classification.

Table H.7. Fall Creek Rosgen stream classification details

STARTING RM	ENDING RM	SINUOSITY	SLOPE	CHANNEL WIDTH (FEET)	STREAM CLASS
0	1.9	1.88	0.2%	35	C
1.9	2.8	1.75	0.1%	35	C
2.8	3.7	1.69	0.5%	25	C
3.7	4.5	1.61	1.5%	25	C
4.5	4.7	1.18	2.8%	20	B
4.7	5.6	1.19	3.9%	20	B
5.6	6.3	1.08	8.1%	20	A
6.3	6.9	1.29	0.5%	30	C
6.9	8.4	1.12	2.6%	30	B

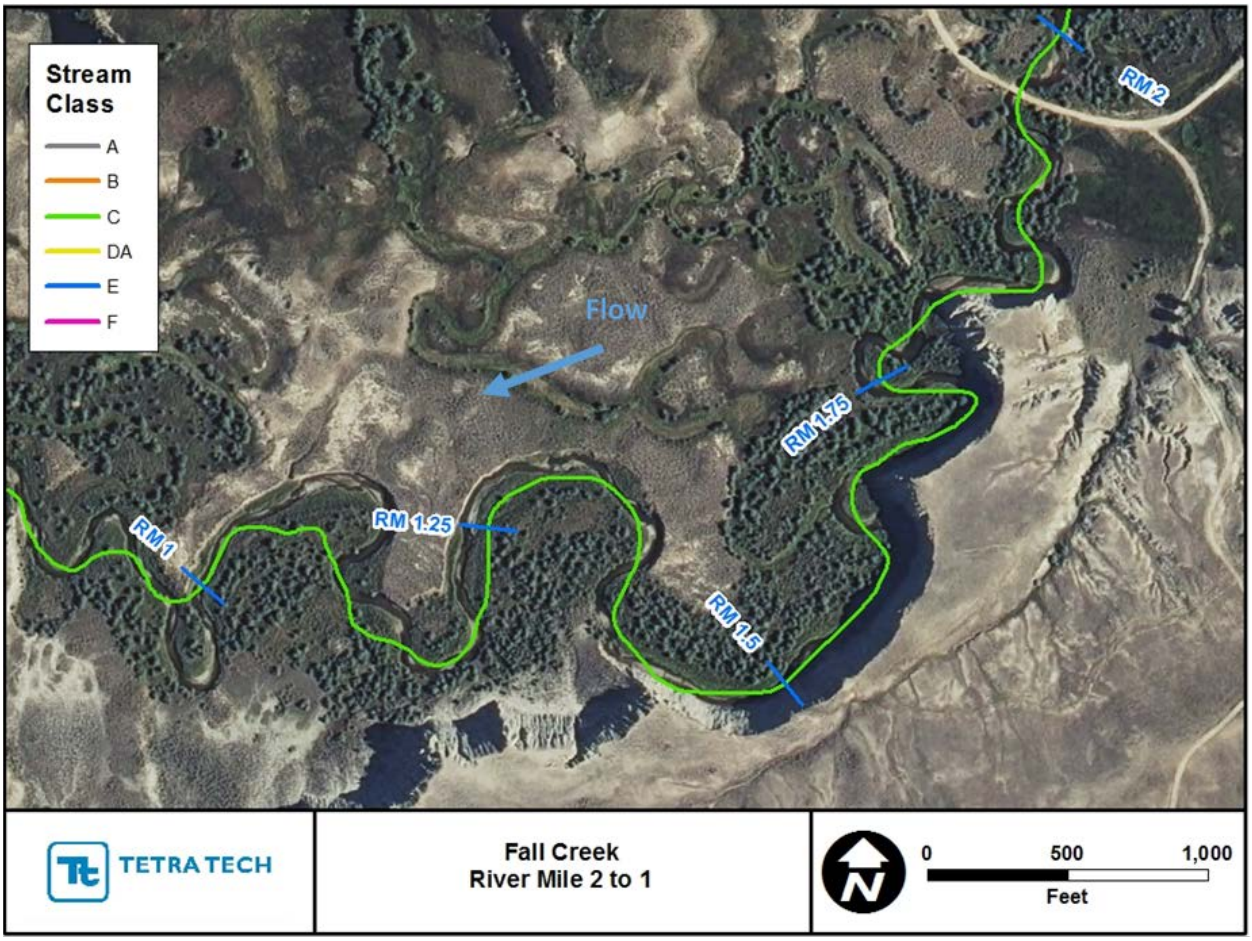

Figure H.19. Area of potential bank erosion along left (south) side of Fall Creek.

H.9 Boulder Creek

Boulder Creek flows out of Boulder Lake for about 2 miles through a coarse, Type B channel dominated by a structure of steep rapids and pools (**Figure H.20** and **Table H.8**). The bed material is primarily boulders and cobbles, indicating that channel movement most likely occurs only during extremely high flow events (**Figure H.21**). Below the rapids section at RM 8.4, the valley slope decreases substantially and the channel develops a Type C meandering planform. Evidence of bank erosion and point bars suggests the channel might be actively adjusting laterally or vertically. It might be appropriate to examine some areas in more detail to assess whether or not the lateral shifting is problematic. The character of the channel does not vary significantly down to the confluence with the NFR. However, in the lowest 1.5-mile section, a number of instream rock structures have been constructed (**Figure H.22**). These features would serve to prevent downcutting and might have been constructed to mitigate undesirable adjustment (**Figure H.23**).

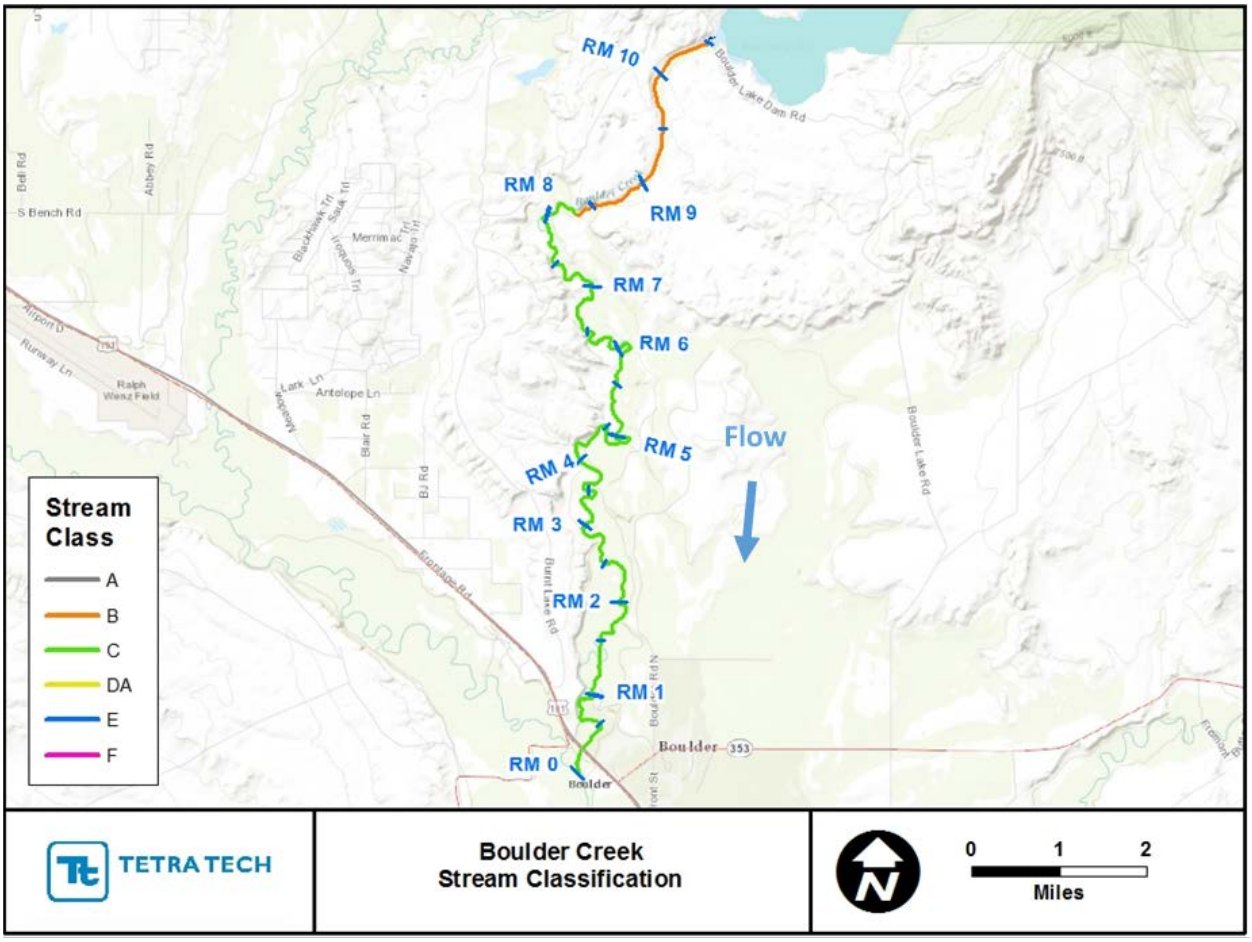

Figure H.20. Layout of Boulder Creek Rosgen stream classification.

Table H.8. Boulder Creek Rosgen stream classification details

STARTING RM	ENDING RM	SINUOSITY	SLOPE	CHANNEL WIDTH (FEET)	STREAM CLASS
0	5.2	1.8	0.2%	50	C
5.2	5.7	1.35	0.0%	75	C
5.7	6.7	1.57	0.4%	75	C
6.7	7.2	1.25	0.4%	50	C
7.2	7.9	1.3	0.0%	65	C
7.9	8.3	1.25	1.0%	45	C
8.3	8.9	1.13	3.9%	40	B
8.9	9.4	1.05	0.8%	100	B
9.4	10.5	1.07	1.5%	130	B

Source: SCCD

Figure H.21. Looking downstream at coarse bed of Boulder Creek at approximately RM 9.

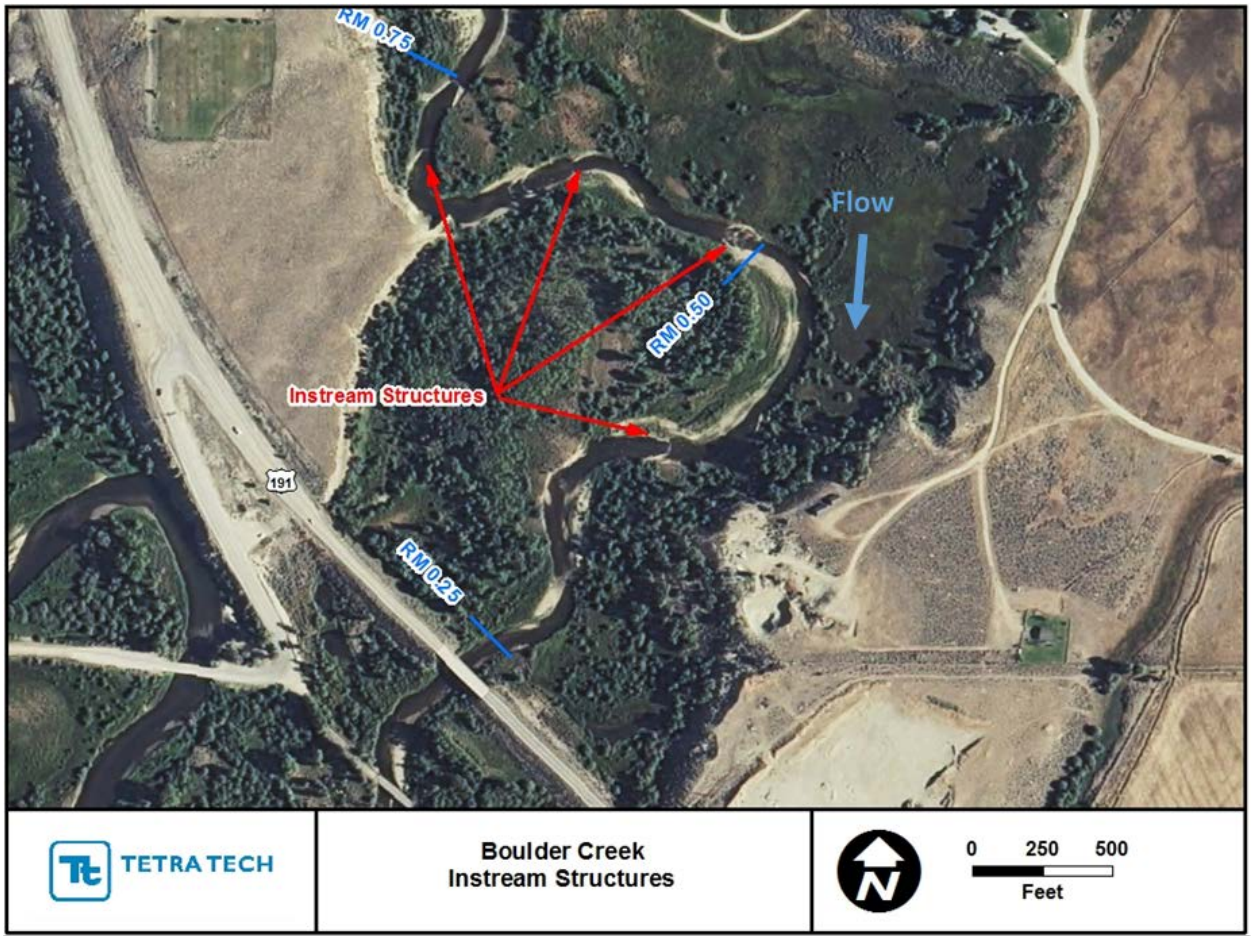

Source: SCCD

Figure H.22. Examples of instream structure locations in Boulder Creek.

Source: SCCD

Figure H.23. Looking upstream at an instream structure installed in Boulder Creek at RM 0.8.

H.10 East Fork River

The East Fork River is the longest tributary to the NFR at about 56 miles long (**Figure H.24** and **Table H.9**). Similar to Willow Creek, there is no large natural lake along its path. Instead, it begins at an elevation of about 10,000 feet close to the divide of the Wind River Range and picks up numerous tributaries as it flows for about 21 miles through a series of steep Type A and Type B canyons that are interrupted occasionally by short, flat Type C meadows. A number of irrigation canal connections appear at about RM 34.5, just upstream of Highway 353. Below Highway 353, the channel meanders through highly erodible material, with both Type C and Type F sections, down to the confluence with Muddy Creek at RM 25.9 (**Figure H.25**). Regular conveyance of flow in the floodplain appears to reduce erosive forces in the main channel, which most likely limits a tendency to downcut through the fine materials, but it might be appropriate to assess whether the observed bank erosion is of any concern. Sinuosity, slope, and the overall morphology of the channel remain relatively unchanged downstream through the confluence with Cottonwood Creek at RM 18. A constriction in the valley just downstream of the confluence with Silver Creek reduces channel sinuosity and the planform appears more entrenched between about RM 13.8 and RM 10. In the final 10 miles to the confluence with the NFR, numerous abandoned/oxbow channels indicate that the channel has historically meandered across the entire valley width. This behavior does not appear to immediately threaten any development within the floodplain, but might warrant closer inspection. More so than any of the other classified streams, the East Fork River appears to be a significant source of fine sediment into the NFR (**Figure H.26**). Any interruption of this sediment supply could lead to a response in the reaches below the confluence.

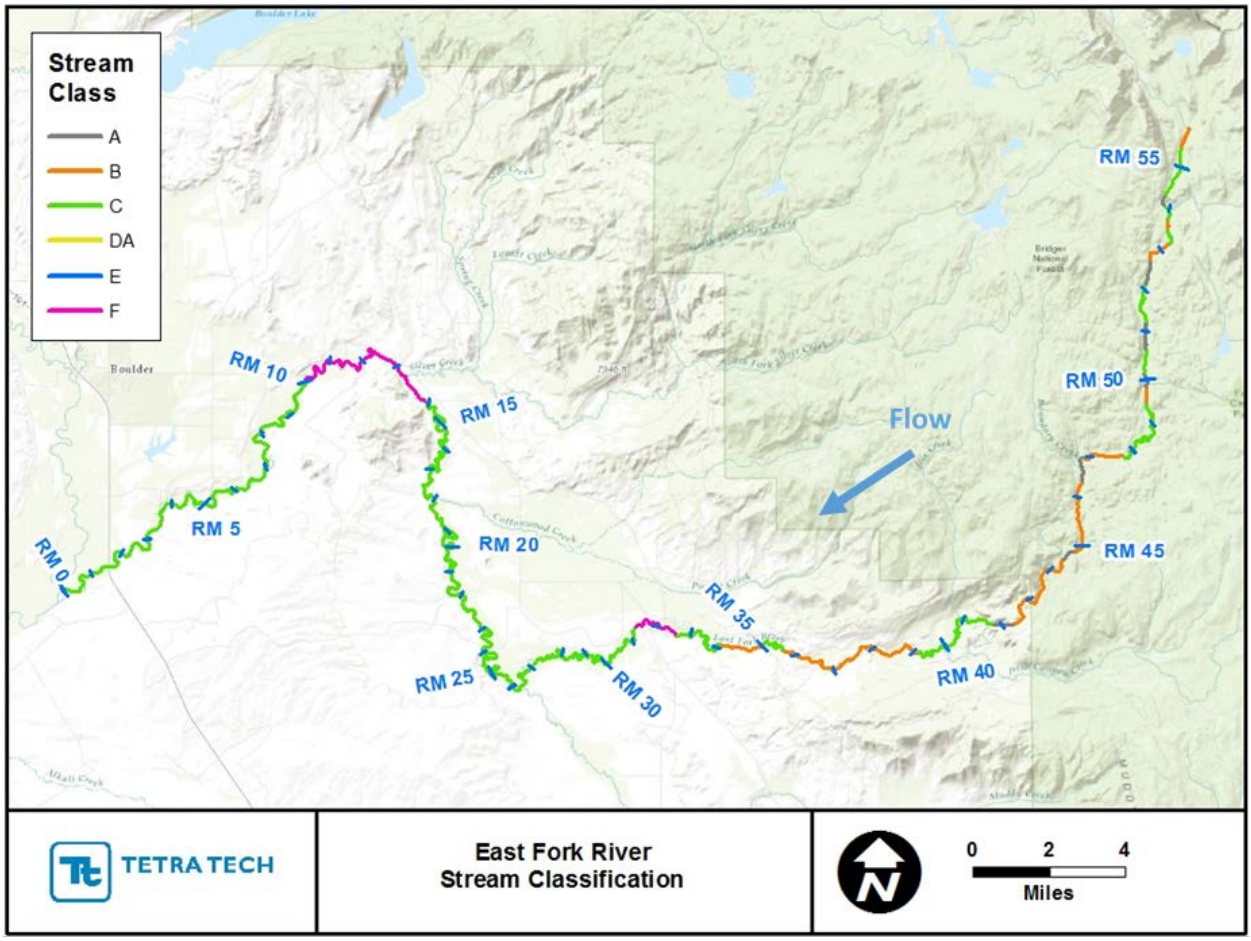

Figure H.24. Layout of East Fork River Rosgen stream classification.

Table H.9. East Fork River Rosgen stream classification details

STARTING RM	ENDING RM	SINUOSITY	SLOPE	CHANNEL WIDTH (FEET)	STREAM CLASS
0	1.4	1.31	0.1%	75	C
1.4	4	1.48	0.1%	80	C
4	6.5	1.53	0.1%	75	C
6.5	10	1.58	0.2%	60	C
10	11.7	1.66	0.3%	50	F
11.7	13.3	1.18	0.4%	50	F
13.3	14	1.39	0.0%	55	F
14	18	1.81	0.1%	50	C
18	23.8	1.64	0.1%	50	C
23.8	26.2	1.83	0.1%	45	C
26.2	29.9	1.94	0.2%	40	C
29.9	31.3	1.69	0.5%	40	C
31.3	32.5	1.31	0.4%	40	F
32.5	33.2	1.66	0.3%	35	C
33.2	34.2	1.35	1.6%	35	C
34.2	35	1.15	3.7%	50	B
35	35.6	1.51	0.9%	75	C
35.6	39.1	1.28	1.6%	60	B
39.1	39.9	1.5	0.4%	50	C
39.9	41.8	1.42	1.3%	25	C
41.8	42.3	1.02	7.2%	40	A
42.3	44.5	1.19	3.1%	50	B
44.5	44.8	1.07	10.9%	25	A
44.8	45.5	1.07	3.7%	25	B
45.5	46.3	1.08	0.9%	25	B
46.3	46.9	1.05	5.4%	25	A
46.9	47.7	1.08	3.2%	25	B
47.7	49.4	1.35	0.7%	75	C
49.4	49.8	1.21	2.0%	25	B
49.8	50.2	1.14	6.2%	25	A
50.2	50.6	1.19	0.8%	40	C
50.6	51.2	1.04	5.1%	25	A
51.2	52.1	1.3	0.4%	60	C
52.1	52.6	1.05	5.6%	15	A
52.6	53.2	1.07	2.2%	15	B
53.2	53.6	1.15	1.0%	15	C
53.6	53.7	1.1	1.5%	15	B
53.7	54.1	1.34	1.2%	25	C
54.1	54.4	1.07	8.4%	15	A
54.4	55.4	1.28	0.7%	25	C
55.4	55.8	1.11	4.0%	15	B

Source: SCCD

Figure H.25. Looking downstream at the confluence of Muddy Creek (left) and East Fork River at RM 25.9.

Source: SCCD

Figure H.26. Looking upstream at fine material deposits along East Fork River at RM 0.2.

H.11 References

Dunne, T., and L.B. Leopold. 1978. *Water in Environmental Planning*. W.H. Freeman and Company, San Francisco, CA.

Rosgen, D.L., and H.L. Silvey. 1996. *Applied River Morphology*. Wildland Hydrology Books, Fort Collins, CO.

Strahler, A.H. 1952. Hypsometric (area-altitude) analysis of erosional topology. *Geological Society of America Bulletin* 63(11):1117–1142.

———. 1957. Quantitative analysis of watershed geomorphology. *Transactions of the American Geophysical Union* 38(6):913–920.

USGS (U.S. Geological Survey). 1981. *Guidelines for Determining Flood Flow Frequency*. Bulletin #17B of the Hydrology Subcommittee, Interagency Advisory Committee on Water Data, U.S. Department of Interior, U.S. Geologic Survey, Reston, VA.

Appendix I.
Water Quality

Contents

I.1 Introduction 4
I.2 pH 8
I.3 Nitrate plus Nitrite 9
I.4 Hydrocarbons 9
I.5 Conductivity 10
I.6 Sodium Adsorption Ratio 11
I.7 Total Dissolved Solids 13
I.8 Chloride 14
I.9 Magnesium 14
I.10 Sodium 15
I.11 Sulfate 16
I.12 Total Suspended Solids 17
I.13 References 18

Tables

Table I.1. SCCD parameter list and available threshold values 6
Table I.2. Salinity (EC) guidelines for water quality for irrigation 10
Table I.3. Soil infiltration guidelines for water quality for irrigation 11
Table I.4. Salinity (TDS) guidelines for water quality for irrigation 13

Figures

Figure I.1. SCCD water quality monitoring stations..... 5
Figure I.2. Observed pH values (data collected by SCCD between 2000 and 2016). 8
Figure I.3. Observed nitrate + nitrite concentrations (data collected by SCCD between 2000 and 2015). .. 9
Figure I.4. Observed conductivity values (data collected by SCCD between 2000 and 2016). 10
Figure I.5. Calculated SAR values (Na, Ca, and Mg data collected by SCCD between 2000 and 2015). . 11
Figure I.6. Plot of conductivity versus SAR showing potential use restrictions for irrigation. 12
Figure I.7. Observed TDS concentrations (data collected by SCCD between 2007 and 2016)..... 13
Figure I.8. Observed chloride concentrations (data collected by SCCD between 2000 and 2015). 14
Figure I.9. Observed magnesium concentrations (data collected by SCCD between 2000 and 2015)..... 14
Figure I.10. Observed sodium concentrations (data collected by SCCD between 2000 and 2015). 15
Figure I.11. Observed sulfate concentrations (data collected by SCCD between 2000 and 2015)..... 16
Figure I.12. Observed TSS concentrations (data collected by SCCD between 2000 and 2015). 17

Abbreviations and Acronyms

EC	electrical conductivity
SAR	Sodium Adsorption Ratio
SCCD	Sublette County Conservation District
TDS	total dissolved solids
TSS	total suspended solids
WQS	water quality standards

Units of Measure

meq/L	milliequivalent per liter
mg/L	milligram per liter
NTU	Nephelometric Turbidity Unit
SU	standard units
µS/cm	microsiemen per centimeter

This page is left intentionally blank.

I.1 Introduction

The Sublette County Conservation District (SCCD) has been monitoring water quality in rivers and streams within the New Fork River watershed since the year 2000. SCCD has sampled 20 monitoring locations that are shown in **Figure I.1**. The suite of parameters included in the SCCD's monitoring program, along with available threshold values, are listed in **Table I.1**.

The remainder of this appendix provides data summaries for those parameters that have relevance to agricultural or wildlife use (i.e., water supply for irrigation or livestock/wildlife water).

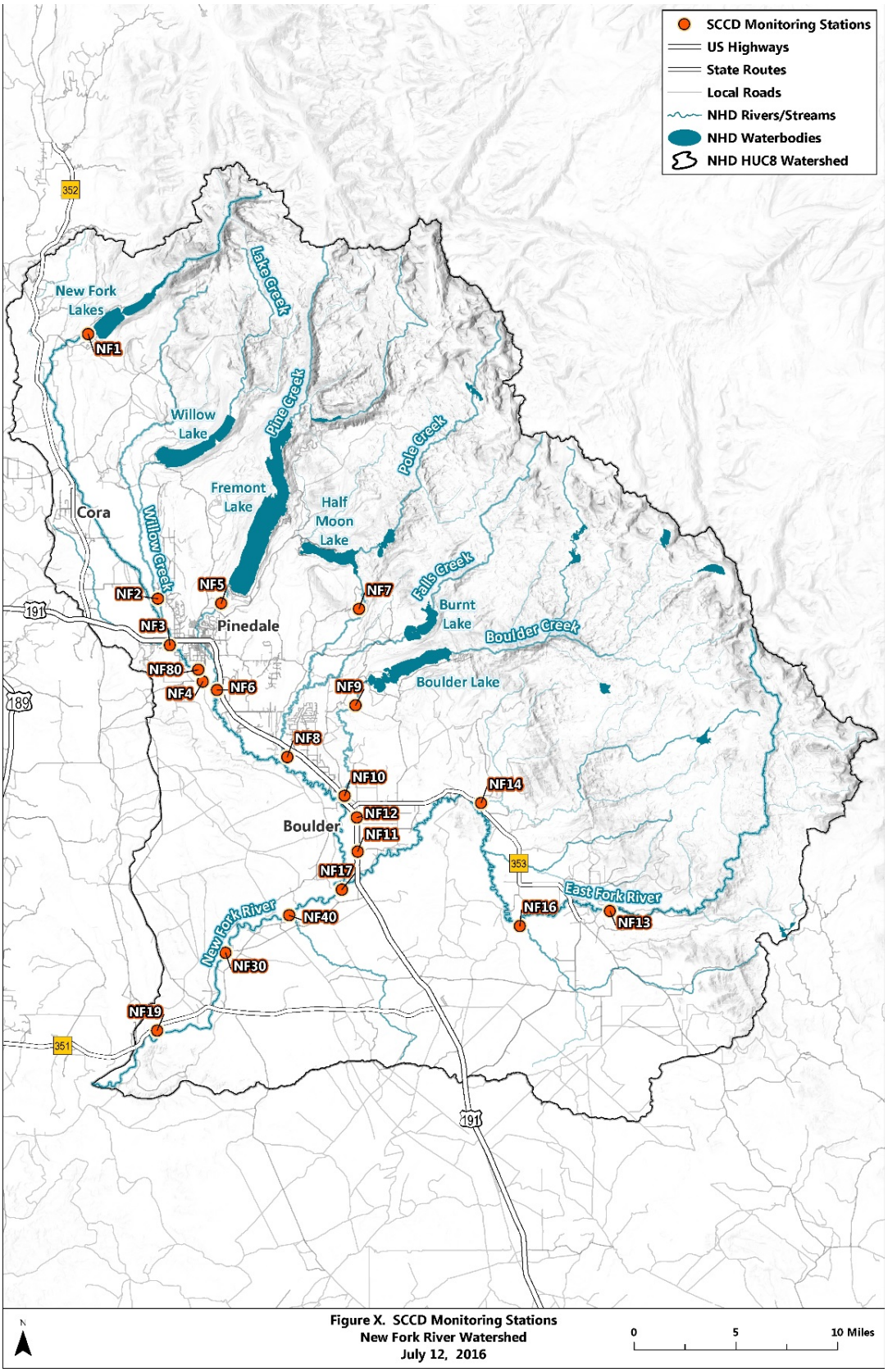

Figure I.1. SCCD water quality monitoring stations.

Table I.1. SCCD parameter list and available threshold values

PARAMETER	UNITS	THRESHOLD VALUES	WQS	GUIDELINE	SOURCE
Temperature	degrees				
Conductivity	µS/cm	>700 (slight), >3,000 (severe)		✓	USEPA 2015
pH	SU	6.5 - 9.0	✓		WDEQ 2013
TDS	mg/L	450 - 2,000 (slight), >2,000 (severe)		✓	Ayers and Westcot 1985
DO	mg/L	5.0	✓		WDEQ 2013
Turbidity	NTU				
Alkalinity	mg/L				
Carbonate	mg/L				
Bicarbonate	mg/L				
Alkalinity, Hydroxide (OH)	mg/L				
Calcium	mg/L				
Calcium	meq/L				
Chloride	mg/L	860 acute, 230 chronic		✓	WDEQ 2013
Magnesium	mg/L	400		✓	Ayers and Westcot 1985
Nitrogen, Nitrate + nitrite as nitrogen	mg/L	10,000 (ug/l)	✓		WDEQ 2013
Phosphorus	mg/L				
Potassium	mg/L				
Sodium	mg/L	4,000 acute, 1,000 chronic		✓	Raisbeck et al., n.d.
Sulfate	mg/L	1,800 acute, 1,000 chronic		✓	Raisbeck et al., n.d.
Hardness	mg/L				
Total Suspended Solids	mg/L	50 (slight), >100 (severe)		✓	Ayers and Westcot 1985
Anion/Cation Balance	%				
Anions	meq/L				
Cations	meq/L				
Benzene	µg/L	2.2 acute, 51 chronic	✓		WDEQ 2013
Ethylbenzene	µg/L	530 acute, 2,100 chronic	✓		WDEQ 2013
m+p-Xylenes	µg/L				
Methyl tert-butyl ether	µg/L				
o-Xylene	µg/L				
Toluene	µg/L	1,000 acute, 15,000 chronic	✓		WDEQ 2013
Xylenes, Total	µg/L	10,000	✓		WDEQ 2013
Surrogate: Trifluorotoluene	% REC				
VOC pH	SU				
Diesel Range Organics	mg/L				

PARAMETER	UNITS	THRESHOLD VALUES	WQS	GUIDELINE	SOURCE
Surrogate: o-Terphenyl	% REC				
Gasoline Range Organics	mg/L				
Total Petroleum Hydrocarbons					
Non-polar Materials	mg/L				
SAR (calculated)		See **Table I.3**		✓	USEPA 2015

Note: meq/L = milliequivalent per Liter; mg/L = milligrams per liter; NTU = Nephelometric Turbidity Units; SU = standard units; µg/L = microgram per liter; µS/cm = microsiemen per centimeter; TDS = total dissolved solids; DO = dissolved oxygen; USEPA = U.S. Environmental Protection Agency; WQS = water quality standard; WDEQ = Wyoming Department of Environmental Quality; % REC = percent recovered

I.2 pH

The pH of water impacts the effectiveness of various water treatments and its palatability for animals. Wyoming has established water quality standards (WQS) with a lower limit of 6.5 standard units (SU) and an upper limit of 9.0 SU.

In the New Fork River watershed, the majority of measured pH values are in the neutral range, with a small number of values exceeding the upper limit of Wyoming's WQS in Willow Creek (NF2), Boulder Creek (NF10), and the East Fork River (NF14) (**Figure I.2**). A small number of the measured values are also less than the lower limit of the WQS within all of the monitored waterbodies except Willow Creek. In the absence of known anthropogenic sources, these minor excursions above the upper limits and below the lower limits of the WQS are likely a natural phenomenon and are not expected to impose any limitations on water use.

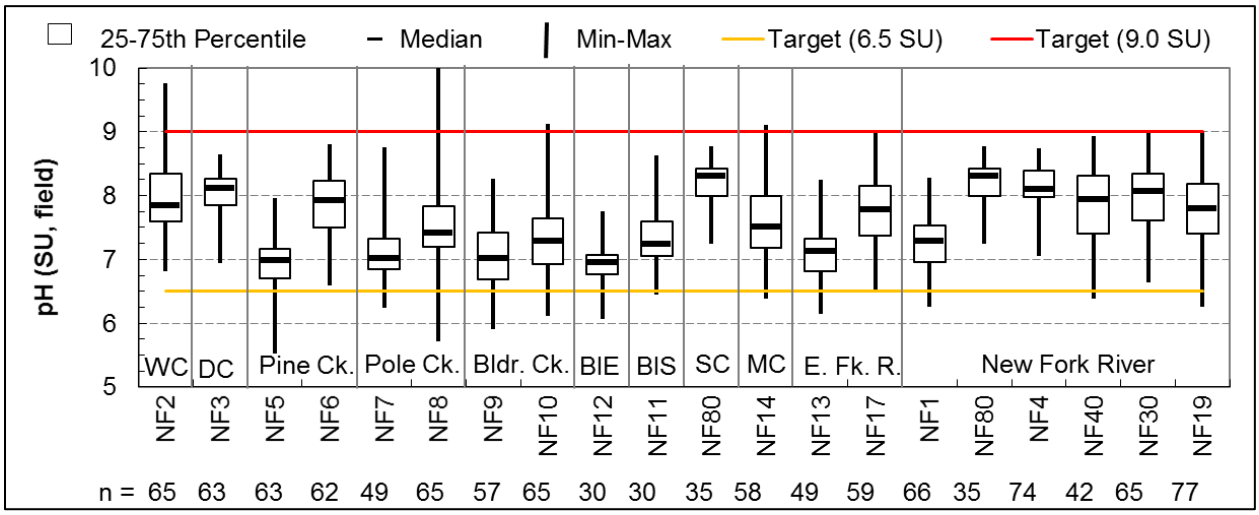

Figure I.2. Observed pH values (data collected by SCCD between 2000 and 2016).

I.3 Nitrate plus Nitrite

Nitrate (NO_3) contamination of drinking water can result in acute death and/or abortion in ruminant livestock. Cattle are usually reported to be more susceptible than sheep, with horses and swine being relatively resistant. It is reasonable to assume deer, antelope, and elk are also susceptible (Raisbeck et al., n.d.). The Wyoming WQS for nitrate + nitrite is 10,000 µg/l (WDEQ 2013), which is shown as 10 milligrams per liter (mg/L) in **Figure I.3**.

Nitrate plus nitrite concentrations are low in the New Fork River watershed. All of the samples collected by SCCD were at or near the method detection limit (which varied from year to year) and none approached or exceeded the standard.

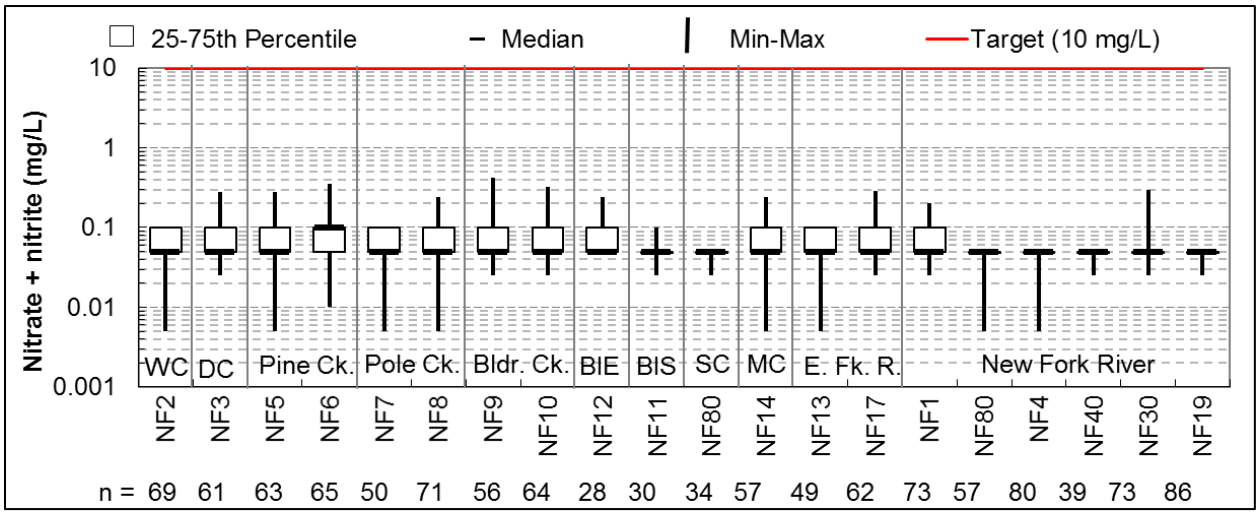

Figure I.3. Observed nitrate + nitrite concentrations (data collected by SCCD between 2000 and 2015).

I.4 Hydrocarbons

SCCD evaluated a number of samples collected from the New Fork River for the following hydrocarbon compounds that might be indicative of contamination associated with oil and gas development: benzene, ethylbenzene, toluene, and xylene. None of these compounds were detected in the samples.

I.5 Conductivity

Conductivity is a measure of salinity or the amount of dissolved salts in water. High conductivity (i.e., salinity) levels in the soil, which can result from soil exposed to irrigation water with high salinity levels, make plants exert more energy to extract water from the soil, which decreases crop production (USEPA 2015). Although no applicable water quality standards currently exist for conductivity, **Table I.2** provides guidelines that are routinely applied as a first step in evaluating water quality for irrigation. Note that conductivity is expressed as "electrical conductivity" (EC) in **Table I.2**.

Table I.2. Salinity (EC) guidelines for water quality for irrigation

PARAMETER	USE RESTRICTIONS		
	NONE	SLIGHT TO MODERATE	SEVERE
EC (µS/cm)	< 700	700 – 3,000	> 3,000

Source: Ayers and Westcot 1985

With the exception of a few excursions above 700 microsiemen per centimeter (uS/cm) in Pole Creek and Boulder Creek, all of the observed conductivity values in the New Fork Watershed were below 700 uS/cm (**Figure I.4**).

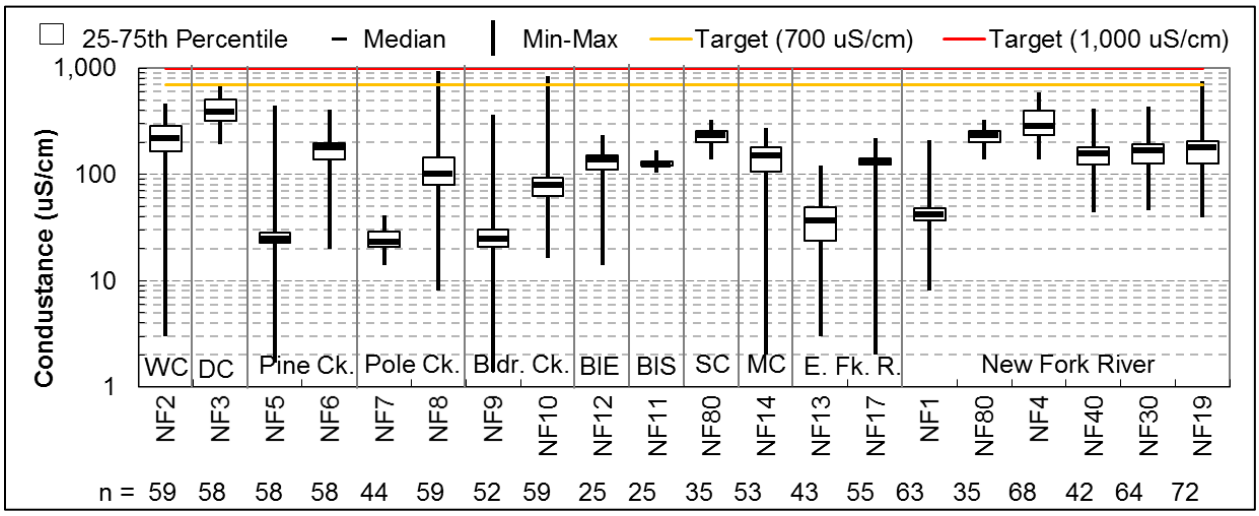

Figure I.4. Observed conductivity values (data collected by SCCD between 2000 and 2016).

I.6 Sodium Adsorption Ratio

Although plant growth is primarily limited by the salinity (electrical conductivity) level of the irrigation water, applying water with a sodium-imbalance can further reduce yield under certain soil texture conditions. Reductions in water infiltration can occur when irrigation water contains high sodium relative to the calcium and magnesium contents. Sodium Adsorption Ration (SAR) represents the relative amount of sodium (Na) ions to the combined amount of calcium (Ca) and magnesium (Mg) ions in water using the following formula:

$$SAR = [Na]/(([Ca]+[Mg])/2)^{1/2},$$

where all concentrations are expressed as milliequivalents of charge per liter (USEPA 2015).

A summary of calculated SAR values for the SCCD's samples is presented in **Figure I.5**. SAR is low in the New Fork River watershed. However, the potential for soil infiltration and permeability problems cannot be adequately assessed on the basis of the SAR alone. This is because the swelling potential of low salinity (EC) water is greater than high EC waters at the same sodium content. Guidelines taking this into consideration are presented in **Table I.3**. To apply these guidelines, conductivity has been plotted against SAR in **Figure I.6**. Due to both low conductivity and SAR, **Figure I.6** suggests that irrigation with the waters in the New Fork River watershed has to potential to cause soil infiltration and permeability problems. Many factors, however, control how sodium in irrigation water affects soils including soil texture, organic matter, cropping system, irrigation system, and management practices.

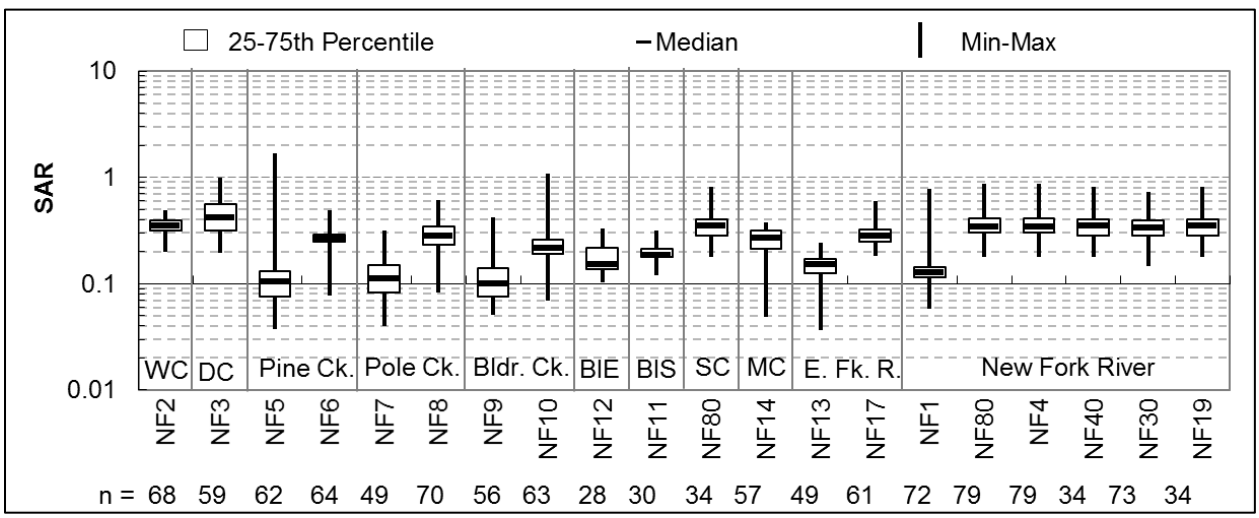

Figure I.5. Calculated SAR values (Na, Ca, and Mg data collected by SCCD between 2000 and 2015).

Table I.3. Soil infiltration guidelines for water quality for irrigation

SAR	USE RESTRICTION (EC in µS/cm)		
	NONE	SLIGHT TO MODERATE	SEVERE
0–3	> 700	200 – 700	< 200
3–6	> 1,200	300 – 1,200	< 300
6–12	> 1,900	500 – 1,900	< 500
12–20	> 2,900	1,300 – 2,900	< 1,300
20–40	> 5,000	2,900 – 5,000	< 2,900

Source: Ayers and Westcot 1985

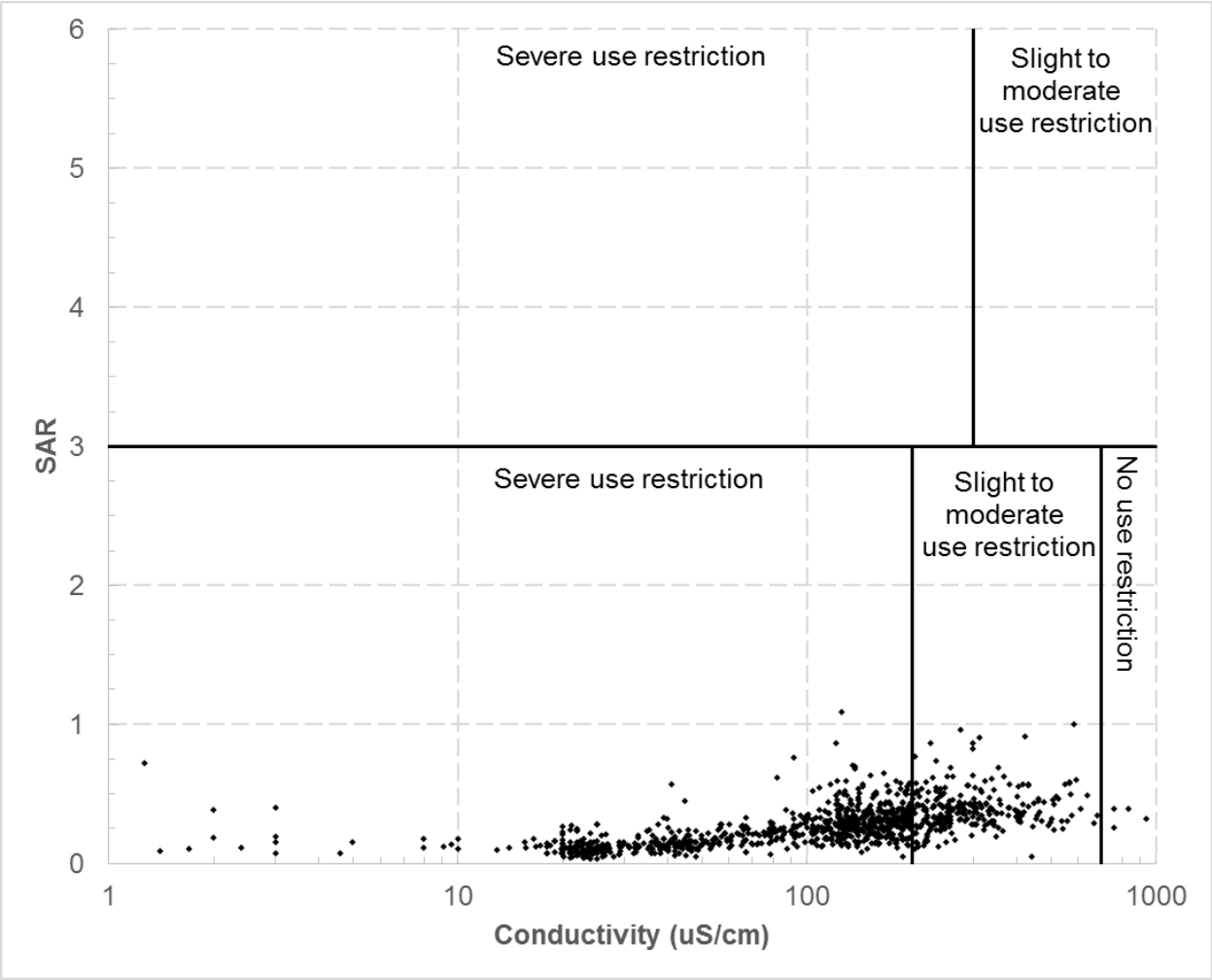

Figure I.6. Plot of conductivity versus SAR showing potential use restrictions for irrigation.

I.7 Total Dissolved Solids

Total dissolved solids (TDS) are defined as all inorganic and organic substances contained in water that can pass through a 2-micron filter. In general, TDS is the sum of the cations and anions in water and, as with conductivity, can be used as a surrogate for salinity. Ayers and Westcot (1985) established the guidelines presented in **Table I.4**. As shown in **Figure I.7**, observed TDS concentrations are low and do not imply any use restrictions.

Table I.4. Salinity (TDS) guidelines for water quality for irrigation

PARAMETER	USE RESTRICTIONS		
	NONE	SLIGHT TO MODERATE	SEVERE
TDS (mg/L)	450	450 – 2,000	> 2,000

Source: Ayers and Westcot 1985

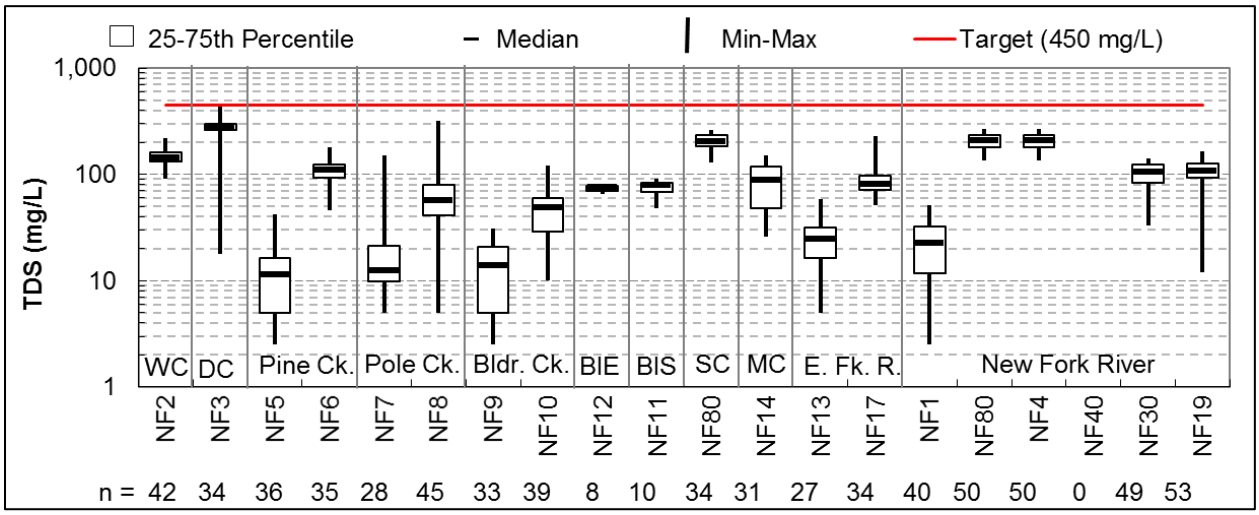

Figure I.7. Observed TDS concentrations (data collected by SCCD between 2007 and 2016).

I.8 Chloride

Chloride can accumulate in some sensitive crops to concentrations high enough to cause crop damage and reduce yields; in addition, chloride can be toxic to aquatic life at high concentrations. Guidelines are not available for crops, but Wyoming has adopted criteria for the protection of aquatic life (see **Table I.1**). Observed chloride concentrations in the New Fork River watershed are low (**Figure I.8**) and are present at orders of magnitude below Wyoming's aquatic life criteria.

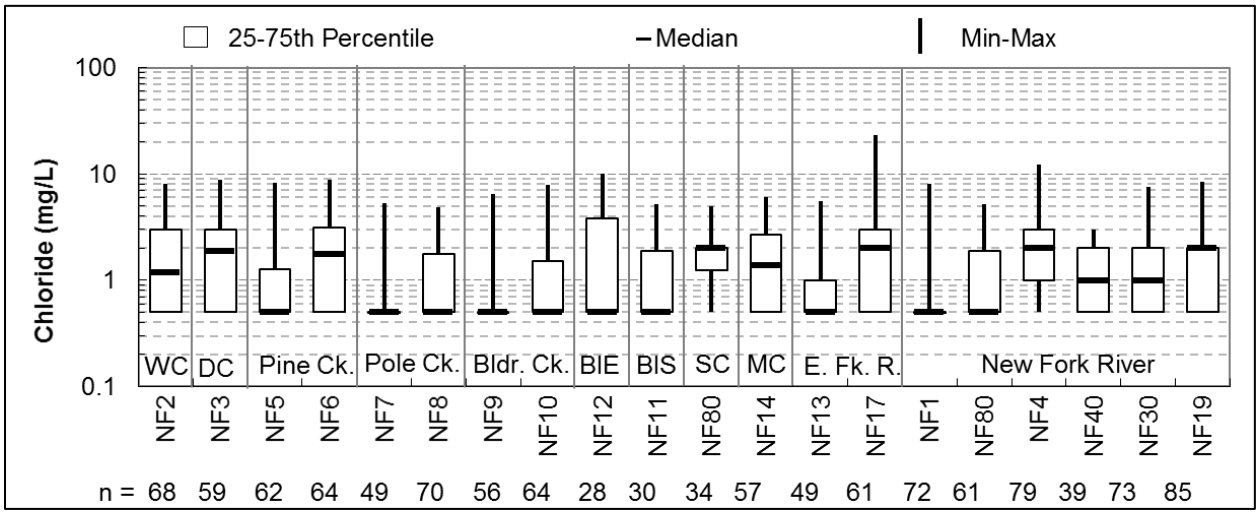

Figure I.8. Observed chloride concentrations (data collected by SCCD between 2000 and 2015).

I.9 Magnesium

Ayers and Westcot (1985) suggest upper limits for magnesium in drinking water for beef cattle of 400 mg/L. Observed concentrations in the New Fork River watershed are well below that limit (**Figure I.9**).

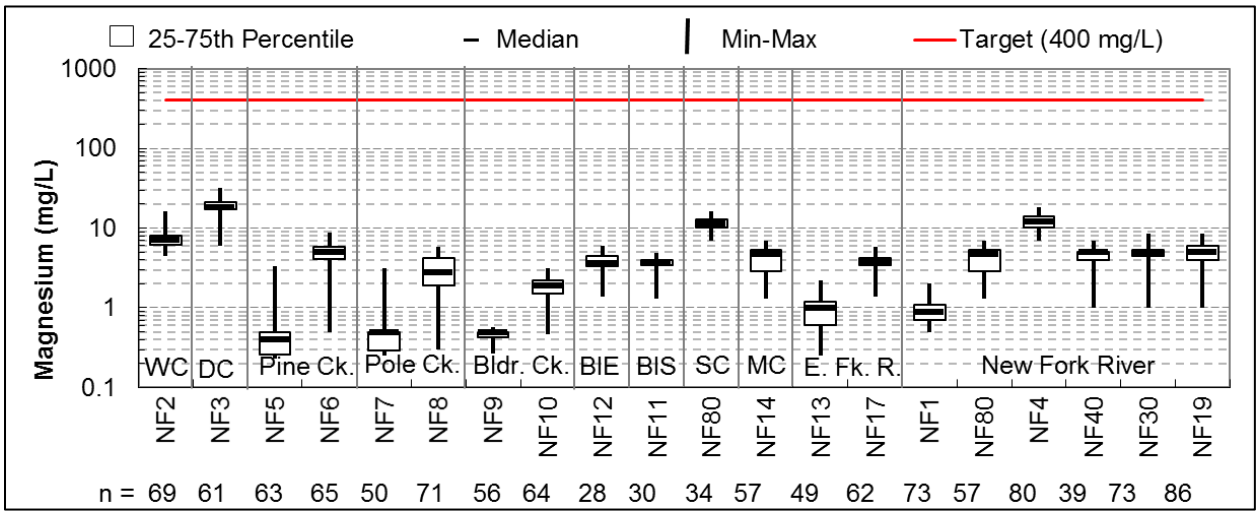

Figure I.9. Observed magnesium concentrations (data collected by SCCD between 2000 and 2015).

I.10 Sodium

The toxic effects of sodium are dependent upon the availability of fresh water. If abundant good-quality drinking water is available, animals can tolerate large doses of sodium. However, excess dietary sodium can result in acute poisoning of livestock (Raisbeck et al., n.d.). The observed concentrations in the waters of the New Fork River watershed (**Figure I.10**) are well below the guidelines of 1,000 mg/L (chronic) and 4,000 mg/L (acute) presented in **Table I.1**.

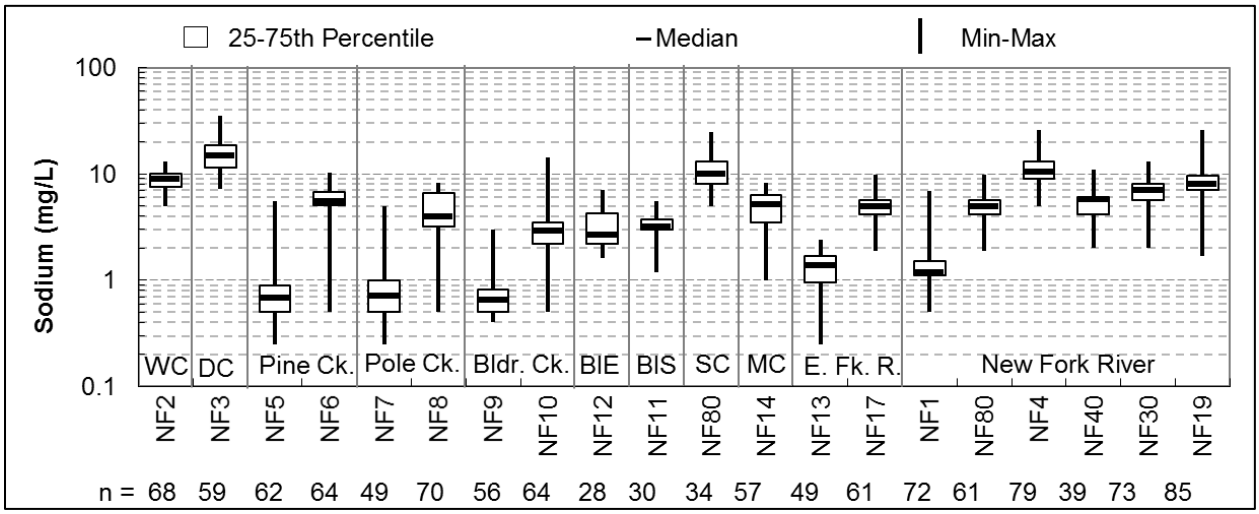

Figure I.10. Observed sodium concentrations (data collected by SCCD between 2000 and 2015).

I.11 Sulfate

In ruminants, high dietary sulfur may cause acute death, polioencephalomalacia (PEM), trace mineral (especially copper) deficiencies, and/or chronic ailments that decrease production efficiency. Maintaining sulfate concentrations less than 1,800 mg/L should minimize the possibility of acute death in cattle. Concentrations less than 1,000 mg/L should not result in any easily measured loss in performance (Raisbeck et al., n.d.).

Data from the New Fork watershed show that all sample sites have sulfate concentrations of substantially less than 1,000 mg/L (**Figure I.11**). Except for two sites (NF3 and NF8), all samples at each site are below 40 mg/L.

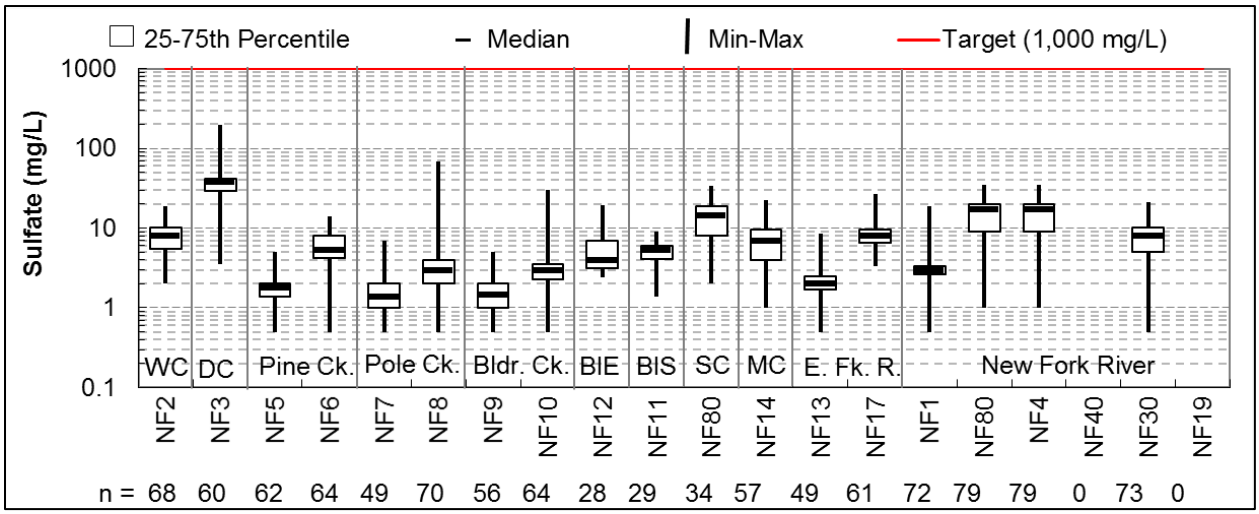

Figure I.11. Observed sulfate concentrations (data collected by SCCD between 2000 and 2015).

I.12 Total Suspended Solids

High levels of total suspended solids (TSS) can accumulate behind dams and diversion structures and potentially clog irrigation infrastructure. Ayres and Westcot (1995) suggest that slight to moderate problems can occur at concentrations between 50 and 100 mg/L, and severe problems might occur at concentrations greater than 100 mg/L.

Observed concentrations in the New Fork River watershed are generally low, with only occasional excursions above 50 or 100 mg/L that are likely only during spring runoff or high-intensity storm events (**Figure I.12**). At all but two sites (NF80 and NF19), 75 percent of samples at each site are less than 7 mg/L.

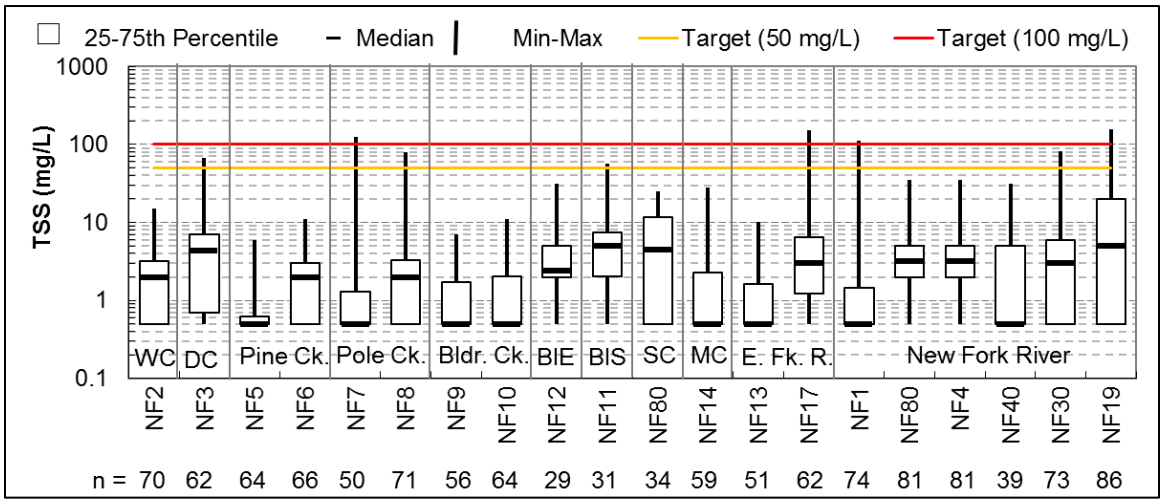

Figure I.12. Observed TSS concentrations (data collected by SCCD between 2000 and 2015).

I.13 References

Ayers, R.S. and D.W. Westcot. 1985. *Water Quality for Agriculture. FAO Irrigation and Drainage Paper 29 Rev. 1*. Reprinted 1989, 1994. http://www.fao.org/docrep/003/t0234e/t0234e00.htm. (Table 29. Suggested Limits for Magnesium in Drinking Water for Livestock [beef cattle]).

Raisbeck, M.F., S.L. Riker, C.M. Tate, R. Jackson, M.A. Smith, and J.R. Zygmunt. n.d. *Water Quality for Wyoming Livestock & Wildlife - A Review of the Literature Pertaining to Health Effects of Inorganic Contaminants*. University of Wyoming Department of Veterinary Sciences B-11823. University of Wyoming Department of Veterinary Science and Department of Renewable Resources, WGFD, and WDEQ. Accessed April 20, 2017. http://www.wyomingextension.org/agpubs/pubs/B1183.pdf.

USEPA. 2015. *EPA Approval of Montana's Water Quality Standards for EC and SAR*. Letter from Martin Hestmark, Assistant Regional Administrator, Office of Ecosystems Protection and Remediation, to Joan Miles, Montana Board of Environmental Review dated December 15, 2015.

WDEQ (Wyoming Department of Environmental Quality). 2013. *Chapter 1. Wyoming Surface Water Quality Standards*. Document 9176. Effective date September 24, 2013. Accessed September 3, 2016. http://soswy.state.wy.us/Rules/RULES/9176.pdf.

———. 2014. *Wyoming's 2014 Integrated 305(b) and 303(d) Report*. Document 16-0126. WDEQ, Water Quality Division, Watershed Section. Cheyenne. Accessed February 25, 2016. http://sgirt.webfactional.com/media/attachments/Water%20Quality/Water%20Quality%20Assessment/Reports/2014-Integrated-305b-and-303d-Report.pdf.

Appendix J.
Natural Resources Conservation Service Ecological Site Descriptions

Content

J.1 Loamy, Foothills and Basins West 3
J.1.1 Site Characteristics 3
J.1.2 Plant Communities 3
J.1.3 Site Interpretations 4
J.2 Coarse Upland - Foothills and Mountains West 4
J.2.1 Site Characteristics 4
J.2.2 Plant Communities 4
J.2.3 Site Interpretations 5
J.3 Sands (Foothills and Basins West) 5
J.3.1 Site Characteristics 5
J.3.2 Plant Communities 5
J.3.3 Site Interpretations 6

The following provides Ecological Site Descriptions for the three most common Natural Resource Conservation Service Ecological Site types in the New Fork River watershed. These were excerpted from: https://esis.sc.egov.usda.gov/Welcome/pgReportLocation.aspx?type=ESD

J.1 Loamy, Foothills and Basins West

J.1.1 Site Characteristics

These sites usually occur in upland positions on relatively flat to moderately sloping land on all exposures, at elevations between 6,500 and 7,000 feet. Associated land features typically include alluvial fans, ridges, and stream terraces. The soils of these sites are deep to moderately deep (greater than 20 inches to bedrock) and are well-drained. Textures range from loamy to very fine sandy loam, and parent material is alluvium and residuum from sedimentary rock.

Annual precipitation ranges from 10 to 14 inches per year. Wide interannual precipitation fluctuations are not uncommon, and they typically result in dryer-than-average years. Temperatures show a wide range between summer and winter and between daily maximums and minimums. This is predominantly due to the high elevation and dry air, which permits rapid incoming and outgoing radiation. Growth of native cool season plants begins about April 15 and continues to about August 15. Some green-up of cool season plants usually occurs in September depending upon fall moisture occurrences.

J.1.2 Plant Communities

These plant community narratives might not represent every possibility, but they probably are the most prevalent and repeatable plant communities. The Historic Climax Plant Community has been determined by a study of the rangeland relic areas, or areas protected from excessive disturbance. The Historic Climax Plant Community for this site is a mixed grass/mountain big sage plant community. This community evolved with grazing by large herbivores and is well-suited for grazing by domestic livestock. Potential vegetation is estimated at 75% grasses or grass-like plants, 10% forbs, and 15% woody plants. The major grasses include rhizomatous wheatgrass, bluebunch wheatgrass, Letterman needlegrass, Canby bluegrass, and needle-and-thread. Other grasses may include Indian ricegrass, prairie junegrass, and bottlebrush squirreltail, Sandberg and mutton bluegrass, threadleaf and needle-leaf sedge, and plains reedgrass. Wyoming big sagebrush is the dominant woody plant. Other woody species may include green rabbitbrush and winterfat.

A typical plant composition for the Historic Climax Plant Community consists of rhizomatous wheatgrass 10%–30%, bluebunch wheatgrass 5%–15%, Letterman needlegrass 5%–15%, needle-and-thread 5%–10%, Canby bluegrass 5%–10%, other grasses and grass-like plants 10%–20%, perennial forbs 5%–15%, Wyoming big sagebrush 10%–20%, and other woody species 5%–10%. The overstory of sagebrush and understory of grass and forbs provide a diverse plant community that will support domestic livestock and wildlife such as mule deer and antelope. Ground cover, by ocular estimate, varies from 40% to 50%.

As this site deteriorates from a combination of frequent and severe grazing, species such as big sagebrush, rabbitbrush, phlox, and yarrow will increase, while cool-season bunchgrasses such as bluebunch wheatgrass, Indian ricegrass, and needle-and-thread will decrease in frequency and production. Big sagebrush will become dominant on some areas with an absence of fire. Wildfires are often actively controlled, so chemical control using herbicides has replaced the historic role of fire on this site. Prescribed burning has regained some popularity recently.

J.1.3 Site Interpretations

Mixed Grass/Big Sagebrush Plant Community: This plant community provides suitable thermal and escape cover for mule deer, elk, and antelope. Sagebrush, which can approach 15% protein and 40%–60% digestibility, provides important winter forage for mule deer and antelope. Year-round habitat is provided for sage-grouse and many other sagebrush obligate species such as the sage sparrow, Brewer's sparrow, sage thrasher, pygmy rabbit, sagebrush vole, horned lizard, and pronghorn antelope. Other birds that would frequent this plant community include horned larks and golden eagles.

Grazing by domestic livestock is one of the major income-producing industries in the area. Rangeland in this area may provide yearlong forage for cattle, sheep, or horses. During the dormant period, the forage for livestock use needs to be supplemented with protein because the quality does not meet minimum livestock requirements.

J.2 Coarse Upland - Foothills and Mountains West

J.2.1 Site Characteristics

This site will usually occur in an upland position on rolling to rough topography, but it could occur on all slopes and positions. The soils of this site are deep, well-drained, and generally non-calcareous. Surface soils are usually loams or sandy loams. Soils contain at least 35% by volume coarse fragments in the first 20 inches. The volume of coarse fragments generally increases with depth. These stony and/or bouldery soils occur as terraces, fan terraces, or glacial moraines.

Annual precipitation ranges from 15 to 19 inches per year. Wide fluctuations can occur in yearly precipitation and result in more dry years than those with more than normal precipitation. Temperatures show a wide range between summer and winter, and between daily maximums and minimums. This is predominantly due to the high elevation and dry air, which permits rapid incoming and outgoing radiation.

J.2.2 Plant Communities

The interpretive plant community for this site is the Historic Climax Plant Community. This state evolved with grazing by large herbivores and is well-suited for grazing by domestic livestock. Potential vegetation is estimated at 60% grasses or grass-like plants, 15% forbs, and 25% woody plants.

The major grasses include bluebunch wheatgrass, spike fescue, and Idaho fescue. Other grasses may include California and timber oatgrass, oniongrass, spike trisetum, Columbia and Letterman needlegrass, mountain and nodding brome, slender and thickspike wheatgrass, Sandberg, Canby, mutton bluegrass, and mountain muhly. Bitterbrush and mountain big sagebrush are the dominant woody plants. Other woody species might include rubber rabbitbrush, black sagebrush, snowberry, and serviceberry.

A typical plant composition for this state consists of bluebunch wheatgrass 10%–35%, spike fescue 10%–20%, Idaho fescue 5%–10%, other grasses and grass-like plants 10%–20%, perennial forbs 5%–15%, bitterbrush 10%–20%, mountain big sagebrush 1%–10%, and up to 5% other woody species. The overstory of sagebrush and understory of grass and forbs provide a diverse plant community that will support domestic livestock and wildlife such as mule deer and antelope. Ground cover, by ocular estimate, varies from 45% to 55%, and canopy cover of shrubs ranges from 30% to 45%.

The total annual production (air-dry weight) of this state is about 1,600 pounds/acre, but it can range from about 1,100 pounds/acre in unfavorable years to about 2,000 pounds/acre in above average years.

J.2.3 Site Interpretations

This plant community is extremely stable and well-adapted to the Central Rocky Mountains climatic conditions. The diversity in plant species allows for high drought tolerance. This is a sustainable plant community (site/soil stability, watershed function, and biologic integrity). Transitions or pathways leading to other plant communities are as follows:

- Nonuse and No Fire will convert this plant community to the Mountain Big Sage/Bitterbrush State.
- Heavy Continuous Season-long Grazing with No Fire will convert this plant community to the Mountain Big Sage/Snowberry State.
- Wildfire or Prescribed Fire (on predominantly south and west facing slopes) could convert this plant community to the Cheatgrass State.

J.3 Sands (Foothills and Basins West)

J.3.1 Site Characteristics

This site usually occurs in an upland position on rolling to very rough topography. Slopes are commonly 10%–30%, and elevations are mostly above 7,000 feet. The soils of this site formed primarily in aeolian deposits and less commonly in residuum. They are deep and moderately deep sandy soils. This soil can develop into active sand dunes with the deterioration of cover. The parent material is eolian sands, outwash, and residuum. Major soil series correlated to this site include Coyet, Zeomont and a moist phase of the Bodorumpe series.

Annual precipitation ranges from 10 to 14 inches per year. Wide fluctuations canoccur in yearly precipitation and result in more dry years than those with more than normal precipitation. Temperatures show a wide range between summer and winter, and between daily maximums and minimums. This is predominantly due to the high elevation and dry air, which permits rapid incoming and outgoing radiation. Cold air outbreaks in winter move rapidly from northwest to southeast and account for extreme minimum temperatures.

J.3.2 Plant Communities

The interpretive plant community for this site is the Historic Climax Plant Community. This state evolved with grazing by large herbivores and is suited for grazing by domestic livestock. Potential vegetation is estimated at 60% grasses or grass-like plants, 15% forbs, and 25% woody plants. The major grasses include needle-and-thread, Indian ricegrass, thickspike wheatgrass, and bottlebrush squirreltail. Other grasses include Sandberg bluegrass, prairie junegrass, bluebunch wheatgrass, Canby bluegrass, and needleleaf sedge. Basin big sagebrush is the dominant woody plant. Other woody plants could include bitterbrush, fourwing saltbush, rubber and green rabbitbrush, winterfat, and silver sagebrush.

A typical plant composition for this state consists of needle-and-thread 15%–35%, Indian ricegrass 10%–25%, thickspike wheatgrass 5%–10%, bottlebrush squirreltail 5%–10%, other grasses and grass-like

plants 10%–20%, perennial forbs 5%–15%, basin big sagebrush 5%–10%, and 5%–15% other woody species. Ground cover, by ocular estimate, varies from 20% to 30%.

The total annual production (air-dry weight) of this state is about 1,400 pounds per acre, but it can range from about 900 pounds/acre in unfavorable years to about 1,700 pounds/acre in above average years.

J.3.3 Site Interpretations

Water is the principal factor limiting forage production on this site. This site is dominated by soils in hydrologic group A, with localized areas in hydrologic group B. Infiltration potential for this site varies from moderately rapid to very rapid depending on soil hydrologic group and ground cover. Runoff varies from very low to moderately low (refer to Part 630, Natural Resources Conservation Service's National Engineering Handbook for detailed hydrology information).

Rills and gullies should not typically be present. Water flow patterns should be barely distinguishable, if at all present. Litter typically falls in place, and signs of movement are not common. Chemical and physical crusts are rare to nonexistent.

Appendix K.
Wyoming Natural Diversity Database Occurrence Records for the New Fork River Watershed

Abbreviations and Acronyms

BLM	U.S. Bureau of Land Management (U.S. Department of the Interior)
ESA	Endangered Species Act
USFWS	U.S. Fish and Wildlife Service (U.S. Department of the Interior)
WGFD	Wyoming Game and Fish Department

The following table provides occurrence records from the Wyoming Natural Diversity Database that were obtained from Melanie Arnett (University of Wyoming) via electronic mail on August 10, 2016. These records are “clipped” to the New Fork River Watershed.

SCIENTIFIC NAME	COMMON NAME	USFWS ESA [A]	WY BLM [B]	USFS	WGFD	G RANK	S RANK
Amphibians							
Rana luteiventris	Columbia Spotted Frog		S	S-USFS R2, S-USFS R4	NSS3 (Bb), Tier 2	G4	S3
Spea intermontana	Great Basin Spadefoot		S		NSSU (U), Tier 1	G5	S3
Lithobates pipiens	Northern Leopard Frog	NW	S	S-USFS R2	NSSU (U), Tier 3	G5	S3
Anaxyrus boreas - Northwestern Clade	Northwestern Clade Western Toad		S	S-USFS R2, S-USFS R4	NSS1 (Aa), Tier 1	G4T4	S1
Ambystoma mavortium	Tiger Salamander					G5	S4
Birds							
Recurvirostra americana	American Avocet					G5	S3B
Botaurus lentiginosus	American Bittern			S-USFS R2	NSS3 (Bb), Tier 2	G4	S3B
Cinclus mexicanus	American Dipper					G5	S4
Picoides dorsalis	American Three-toed Woodpecker			S-USFS R4	NSSU (U), Tier 2	G5	S3
Pelecanus erythrorhynchos	American White Pelican					G4	S1B
Haliaeetus leucocephalus	Bald Eagle	DM	S	S-USFS R2, S-USFS R4	NSS2 (Ba), Tier 1	G5	S3B,S5N
Tyto alba	Barn Owl					G5	S2
Leucosticte atrata	Black Rosy-Finch				NSSU (U), Tier 2	G4	S1B,S2N
Coccyzus erythropthalmus	Black-billed Cuckoo					G5	S2
Nycticorax nycticorax	Black-crowned Night-Heron				NSS3 (Bb), Tier 2	G5	S3B
Himantopus mexicanus	Black-necked Stilt					G5	S3B
Aegolius funereus	Boreal Owl			S-USFS R2, S-USFS R4	NSS3 (Bb), Tier 2	G5	S2
Spizella breweri	Brewer's Sparrow		S	S-USFS R2	NSS4 (Bc), Tier 2	G5	S5
Leucosticte australis	Brown-capped Rosy-Finch				NSSU (U), Tier 2	G4	S1
Bucephala albeola	Bufflehead					G5	S2B
Athene cunicularia	Burrowing Owl		S	S-USFS R2	NSSU (U), Tier 1	G4	S4B
Larus californicus	California Gull					G5	S2B

SCIENTIFIC NAME	COMMON NAME	USFWS ESA [A]	WY BLM [B]	USFS	WGFD	G RANK	S RANK
Selasphorus calliope	Calliope Hummingbird					G5	S3
Aechmophorus clarkii	Clark's Grebe				NSSU (U), Tier 2	G5	S1B
Tympanuchus phasianellus columbianus	Columbian Sharp-tailed Grouse	NW	S	S-USFS R2, S-USFS R4	NSS4 (Bc), Tier 2	G4T3	S1
Bucephala clangula	Common Goldeneye					G5	S3B
Gavia immer	Common Loon			S-USFS R4	NSS1 (Aa), Tier 1	G5	S1B,S2N
Junco hyemalis	Dark-eyed Junco					G5	S5B,S5N
Megascops asio	Eastern Screech-Owl					G5	S3
Buteo regalis	Ferruginous Hawk		S	S-USFS R2	NSSU (U), Tier 1	G4	S4B,S5N
Psiloscops flammeolus	Flammulated Owl			S-USFS R2, S-USFS R4		G4	S1?
Aquila chrysaetos	Golden Eagle					G5	S4B,S4N
Regulus satrapa	Golden-crowned Kinglet					G5	S3B,S4N
Ammodramus savannarum	Grasshopper Sparrow			S-USFS R2	NSS4 (Bc), Tier 2	G5	S4
Strix nebulosa	Great Gray Owl			S-USFS R4	NSSU (U), Tier 1	G5	S2
Centrocercus urophasianus	Greater Sage-Grouse	C	S	S-USFS R2, S-USFS R4	NSS2 (Ba), Tier 1	G3G4	S4
Empidonax hammondii	Hammond's Flycatcher					G5	S4
Histrionicus histrionicus	Harlequin Duck			S-USFS R2, S-USFS R4	NSS3 (Bb), Tier 2	G4	S1B
Melanerpes lewis	Lewis's Woodpecker			S-USFS R2	NSSU (U), Tier 2	G4	S2
Lanius ludovicianus	Loggerhead Shrike		S	S-USFS R2		G4	S3
Numenius americanus	Long-billed Curlew		S	S-USFS R2	NSS3 (Bb), Tier 2	G5	S3B
Falco columbarius	Merlin				NSSU (U), Tier 3	G5	S3B,S4N
Charadrius montanus	Mountain Plover	NW	S	S-USFS R2	NSSU (U), Tier 1	G3	S2B,S3B
Accipiter gentilis	Northern Goshawk	NW	S	S-USFS R2, S-	NSSU (U), Tier 1	G5	S2B,S3N

SCIENTIFIC NAME	COMMON NAME	USFWS ESA [A]	WY BLM [B]	USFS	WGFD	G RANK	S RANK
				USFS R4			
Glaucidium gnoma	Northern Pygmy-Owl				NSSU (U), Tier 2	G4G5	S1
Pandion haliaetus	Osprey					G5	S3B
Falco peregrinus	Peregrine Falcon	DM	S	S-USFS R2, S-USFS R4	NSS3 (Bb), Tier 2	G4	S2
Aythya collaris	Ring-necked Duck					G5	S4B
Pheucticus ludovicianus	Rose-breasted Grosbeak					G5	S1
Oreoscoptes montanus	Sage Thrasher		S		NSS4 (Bc), Tier 2	G5	S5
Artemisiospiza nevadensis	Sagebrush Sparrow		S	S-USFS R2	NSS4 (Bc), Tier 2	G5	S3
Grus canadensis	Sandhill Crane				NSS4 (Bc), Tier 3	G5	S3B,S5N
Asio flammeus	Short-eared Owl			S-USFS R2	NSS4 (Bc), Tier 2	G5	S2
Egretta thula	Snowy Egret				NSS3 (Bb), Tier 2	G5	S3B
Cygnus buccinator	Trumpeter Swan	NW	S	S-USFS R2, S-USFS R4	NSS2 (Ba), Tier 2	G4	S3B,S3N
Cygnus columbianus	Tundra Swan					G5	S2N
Oreothlypis virginiae	Virginia's Warbler					G5	S1
Megascops kennicottii	Western Screech-Owl					G5	S2
Plegadis chihi	White-faced Ibis		S		NSS3 (Bb), Tier 2	G5	S1B
Plegadis chihi	White-faced Ibis		S		NSS3 (Bb), Tier 2	G5	S1B
Lagopus leucura	White-tailed Ptarmigan	UR		S-USFS R2		G5	S1
Grus americana	Whooping Crane	LE and LEXN				G1	S1N
Sphyrapicus thyroideus	Williamson's Sapsucker					G5	S2
Troglodytes hiemalis	Winter Wren					G5	SNA
Crustaceans							
Branchinecta	A Fairy Shrimp					GNR	SNR

SCIENTIFIC NAME	COMMON NAME	USFWS ESA [A]	WY BLM [B]	USFS	WGFD	G RANK	S RANK
Branchinecta coloradensis	Colorado Fairy Shrimp				NSSU (U), Tier 3	G5	SNR
Ferns and Fern Allies							
Selaginella selaginoides	Low spike-moss			S-USFS R2		G5	S1
Marsilea vestita var. oligospora	Pepperwort					G5	S1
Fish							
Catostomus latipinnis	Flannelmouth Sucker		S	S-USFS R2	NSS1 (Aa), Tier 1	G3G4	S3
Catostomus platyrhynchus	Mountain Sucker			S-USFS R2		G5	S5
Prosopium williamsoni	Mountain Whitefish				NSS4 (Bc), Tier 2	G5	S5
Gila robusta	Roundtail Chub		S	S-USFS R2	NSS1 (Aa), Tier 1	G3	S3
Plants							
Papaver kluanense	Alpine poppy			SOLC-Bighorn NFR2		G4	S2
Phlox pungens	Beaver Rim phlox		S			G3	S3
Astragalus drabelliformis	Big Piney milkvetch					G2G3	S2S3
Carex luzulina var. atropurpurea	Black and purple sedge			S-USFS R4		G5T4	S2
Hesperochiron californicus	California hesperochiron					G4G5	S1
Ipomopsis crebrifolia	Compact ipomopsis					G3G4	S3
Phacelia glandulosa var. deserta	Desert glandular phacelia					G4T2	S2
Potamogeton robbinsii	Flatleaf pondweed			SOLC-Med Bow NFR2-Thunder Basin NGR2		G5	S2
Salix candida	Hoary willow			S-USFS R2		G5	S2
Lesquerella macrocarpa	Large-fruited bladderpod		S			G2	S2
Potamogeton amplifolius	Large-leaf pondweed			SOLC-Bighorn NFR2		G5	S1S2
Erigeron humilis	Low fleabane			SOLC-Bighorn NFR2		G5	S2
Astragalus diversifolius	Meadow milkvetch		S	S-USFS R4		G2	S1

SCIENTIFIC NAME	COMMON NAME	USFWS ESA [A]	WY BLM [B]	USFS	WGFD	G RANK	S RANK
Antennaria arcuata	Meadow pussytoes		S	S-USFS R4		G3	S3
Parrya nudicaulis	Naked-stemmed parrya			S-USFS R4		G5	S2
Phacelia salina	Nelson phacelia					G3?Q	S2
Carex nelsonii	Nelson's sedge					G3	S2
Juncus triglumis var. albescens	Northern white rush			SOLC-Med Bow NFR2-Thunder Basin NGR2		G5T5	S2
Phlox opalensis	Opal phlox					G3	S3
Penstemon paysoniorum	Payson's Beardtongue					G3	S3
Draba porsildii	Porsild's whitlow-grass					G3G4	S2
Draba globosa	Rockcress whitlow-grass			S-USFS R4		G3	S2S3
Eriophorum scheuchzeri	Scheuchzer cottongrass					G5	S2
Antennaria monocephala ssp. angustata	Single-headed pussytoes			SOLC-Bighorn NFR2		G4G5TNR	S2
Achnatherum swallenii	Swallen's ricegrass					G3G4	S2
Draba crassa	Thick-leaf whitlow-grass					G3G4	S3
Astragalus racemosus var. treleasei	Trelease's racemose milkvetch		S			G5T2	S2
Juncus vaseyi	Vasey's rush			SOLC-Med Bow NFR2-Thunder Basin NGR2		G5?	S1
Draba fladnizensis	White Arctic Whitlow-grass			SOLC-Bighorn NFR2		G4	S2
Insects							
Danaus plexippus plexippus	Monarch Butterfly	UR				G5T3T4	SNR
Boloria alaskensis halli	Napaea Fritillary					G5T2T3	SNR
Mammals							
Ovis canadensis	Bighorn Sheep			S-USFS R2, S-USFS R4	NSS4 (Bc), Tier 2	G4	S3S4

SCIENTIFIC NAME	COMMON NAME	USFWS ESA [A]	WY BLM [B]	USFS	WGFD	G RANK	S RANK
Mustela nigripes	Black-footed Ferret	LE and LEXN			NSS1 (Aa), Tier 1	G1	S1
Lynx canadensis	Canada Lynx	LT			NSS1 (Aa), Tier 1	G5	S1
Sorex nanus	Dwarf Shrew				NSS3 (Bb), Tier 2	G4	S4
Pekania pennanti	Fisher	NW		S-USFS R4	NSSU (U), Tier 3	G5	S1
Tamias umbrinus fremonti	Fremont's Uinta Chipmunk					G5TNR	SNR
Myotis thysanodes	Fringed Myotis		S	S-USFS R2	NSS3 (Bb), Tier 2	G4	S2
Canis lupus	Gray Wolf	PD		S-USFS R2, S-USFS R4		G4G5	S1
Ursus arctos arctos	Grizzly Bear	LT				G4T4	S1
Lasiurus cinereus	Hoary Bat			S-USFS R2		G5	S4
Thomomys idahoensis	Idaho Pocket Gopher		S		NSS3 (Bb), Tier 2	G4	S2
Myotis lucifugus	Little Brown Myotis	UR			NSS4 (Cb), Tier 2	G3	S5
Myotis evotis	Long-eared Myotis		S		NSS3 (Bb), Tier 2	G5	S4
Gulo gulo luscus	North American Wolverine	NW			NSS3 (Bb), Tier 2	G4T4	S2
Lontra canadensis	Northern River Otter			S-USFS R2	NSSU (U), Tier 2	G5	S3
Martes caurina	Pacific Marten			S-USFS R2	NSS4 (Cb), Tier 2	G4G5	S3
Bos bison bison	Plains Bison	NW				G4TU	S1
Brachylagus idahoensis	Pygmy Rabbit	NW	S	S-USFS R4	NSS3 (Bb), Tier 2	G4	S1
Lasionycteris noctivagans	Silver-haired Bat					G5	S3B
Ictidomys tridecemlineatus	Thirteen-lined Ground Squirrel					G5	S5
Urocitellus armatus	Uinta Ground Squirrel					G5	S3S4
Microtus richardsoni	Water Vole			S-USFS R2	NSS3 (Bb), Tier 2	G5	S2

SCIENTIFIC NAME	COMMON NAME	USFWS ESA [A]	WY BLM [B]	USFS	WGFD	G RANK	S RANK
Cynomys leucurus	White-tailed Prairie Dog	UR	S	S-USFS R2		G4	S3
Urocitellus elegans	Wyoming Ground Squirrel					G5	S3S4
Ochotona princeps princeps - Yellowstone	Yellowstone Pika	NW				G5T5Q	S2
Mollusks							
Fluminicola coloradoensis	Green River Pebblesnail				NSSU (U), Tier 2	G2G3	S4
Reptiles							
Charina bottae	Northern Rubber Boa				NSS3 (Bb), Tier 2	G5	S2

Notes
[a] NW = Not Warranted for Listing, UR = Petition Under Review, LT = Listed Threatened, PD = Proposed for Delisting, LE = Listed Endangered, LEXN = Endangered - Nonessential Experimental Population, DM = Delisted, formally monitored, C = Candidate Warranted but Precluded.
[b] S = Sensitive.

Appendix L.
Mapping and Describing Water Conveyance in the New Fork River Watershed

Contents

L.1 Introduction 3
L.2 Methods 3
L.3 New Fork River Water Right & Conveyance Mapping Tool 5
L.3.1 Description 5
L.3.2 New Fork WRCMT User's Guide 7
L.3.3 Uncertainty 10
Attachment 1 - Tabulation of Adjudicated Water Rights of the State of Wyoming – New Fork River Watershed 11

Figures

Figure L.1. Points of diversion and associated conveyance systems in the New Fork River watershed 4
Figure L.2. Example Certificate of Appropriation of Water provided in the New Fork WRCMT 5
Figure L.3. Example conveyance system map provided in the New Fork WRCMT 6
Figure L.4. Example of the tabulated water rights provided in the New Fork WRCMT for each point of diversion and conveyance system 7
Figure L.5. Example summary information provided in the New Fork WRCMT for each point of diversion and conveyance system 7
Figure L.6. New Fork WRCMT data organization 8
Figure L.7. New Fork WRCMT geodatabases 8
Figure L.8. Water Right document folders 8
Figure L.9. New Fork WRCMT map interface 9
Figure L.10. Navigating Water Right information 9

L.1 Introduction

The scope of work for the New Fork River Watershed Level I study specifically stated that all diversions and their main conveyance systems (e.g., ditches, pipelines) for all municipal/rural domestic, industrial, and irrigation systems greater than five cubic feet per second (cfs) shall be mapped and described. This appendix outlines the methods used to map and describe these features and also presents a Geographic Information System (GIS) tool to provide watershed stakeholders with easy access to water rights data in the New Fork River watershed.

L.2 Methods

The *Tabulation of Adjudicated Water Rights of the State of Wyoming - Water Division IV* [1] was manually edited to identify the conveyance systems that transported at least five cubic feet per second (cfs) within the New Fork River watershed. The resulting tabulation is provided in Attachment 1. For each system, the Wyoming State Engineers Office e-Permit system was then accessed to obtain the following for each point of diversion and conveyance system:

- Certificate of Appropriation of Water
- Original maps/drawings
- Diversion Identification (name)
- Permit numbers
- Diversion type
- Conveyance type
- Permitted volumetric flow/storage

The points of diversion and conveyances were then geo-located in GIS using a combination of the available data from the e-Permit system, original maps/drawings, and air photo interpretation. A simplified drawing of the primary conveyance system and points of diversion is provided in **Figure L.1**.

[1]Updated February 2016. Obtained online at: http://seoweb.wyo.gov/e-Permit/Common/Home.aspx

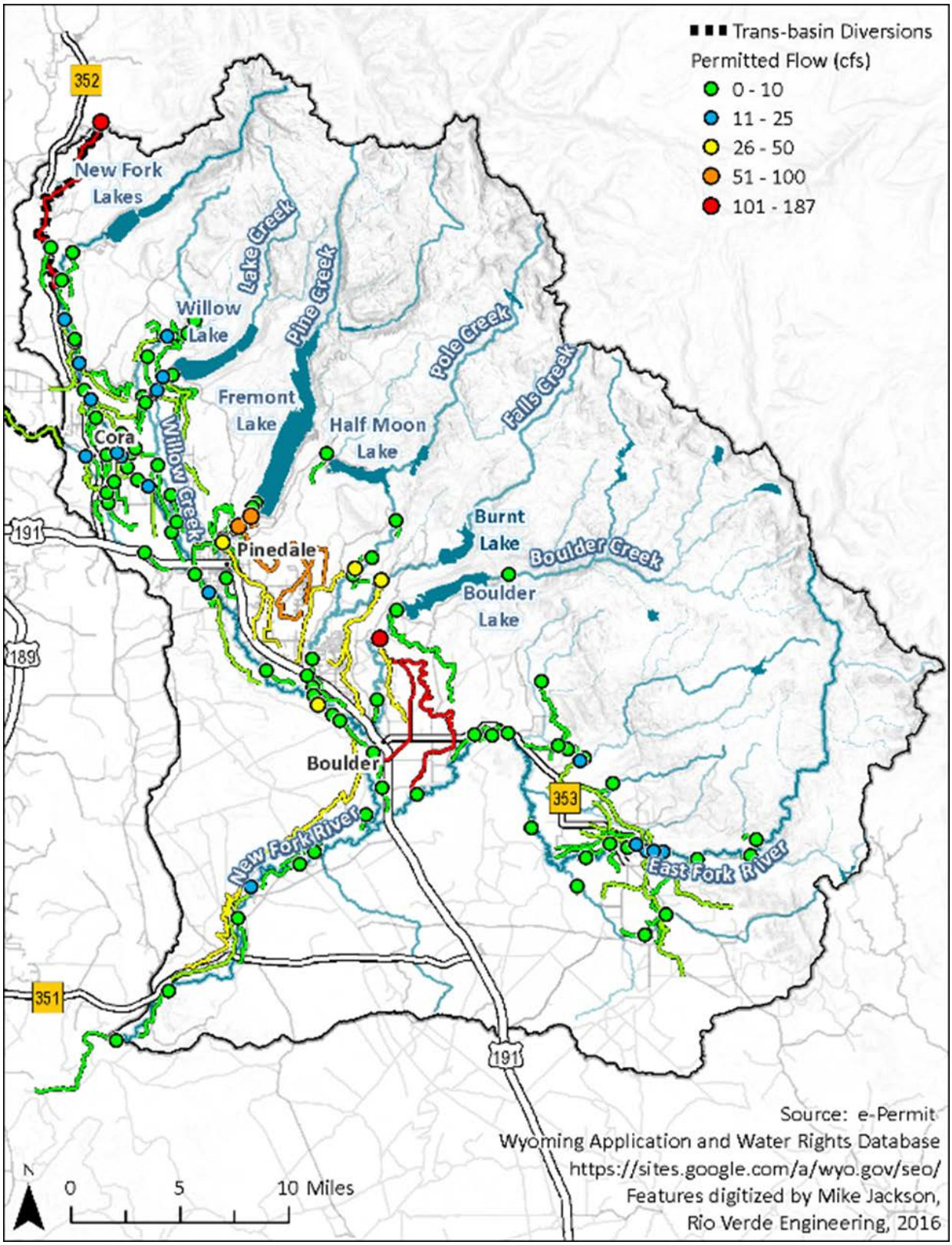

Figure L.1. Points of diversion and associated conveyance systems in the New Fork River watershed

L.3 New Fork River Water Right & Conveyance Mapping Tool

The New Fork River Water Right & Conveyance Mapping Tool ("New Fork WRCMT") was developed to provide watershed stakeholders with easy access to water rights information in the New Fork River watershed. The following describes the New Fork WRCMT and provides a guide for use of the tool, which may be accessed by contacting the Wyoming Water Development Office or the Sublette County Conservation District.

L.3.1 Description

The New Fork WRCMT is an interactive Map Document (MXD) tool that allows users to investigate Diversions, Ditch/Conveyance systems, and Water Right documents within the New Fork River watershed in a simple and intuitive manner. The tool is an integrated framework that links GIS data with permit certificates (**Figure L.2**), conveyance system maps (**Figure L.3**), tabulated water right information spreadsheets (**Figure L.4**), and summary information (**Figure L.5**) for each diversion/conveyance feature.

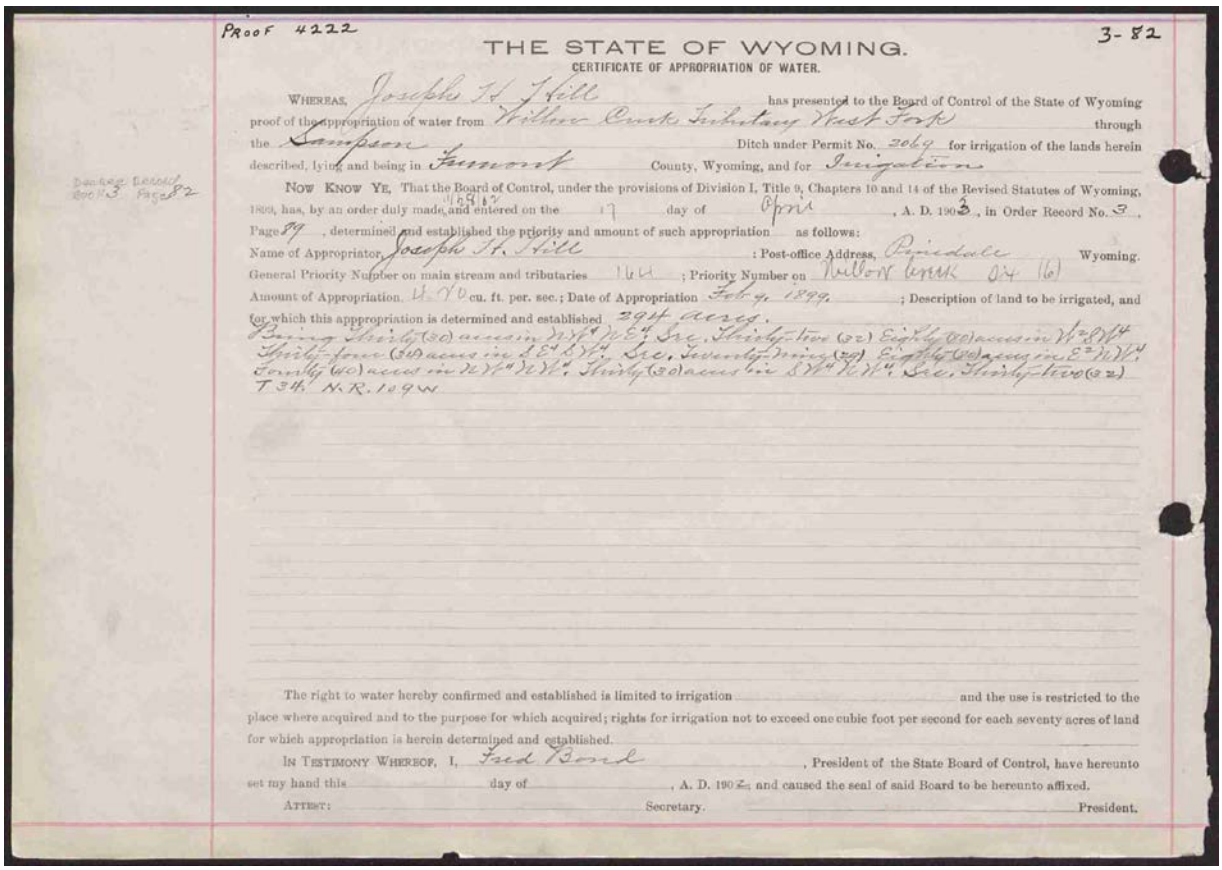

PROOF 4222 3-82

THE STATE OF WYOMING.

CERTIFICATE OF APPROPRIATION OF WATER.

WHEREAS, Joseph H. Hill has presented to the Board of Control of the State of Wyoming proof of the appropriation of water from Willow Creek Tributary West Fork through the Sampson Ditch under Permit No. 2069 for irrigation of the lands herein described, lying and being in Fremont County, Wyoming, and for Irrigation

NOW KNOW YE, That the Board of Control, under the provisions of Division I, Title 9, Chapters 10 and 14 of the Revised Statutes of Wyoming, 1899, has, by an order duly made and entered on the 17 day of April, A. D. 1903, in Order Record No. 3, Page 79, determined and established the priority and amount of such appropriation as follows:

Name of Appropriator, Joseph H. Hill; Post-office Address, Pinedale Wyoming.

General Priority Number on main stream and tributaries 164; Priority Number on Willow Creek Div 16

Amount of Appropriation, 4.00 cu. ft. per. sec.; Date of Appropriation Feb 4, 1899; Description of land to be irrigated, and for which this appropriation is determined and established 294 acres.

Being Thirty (30) acres in N½ N½ Sec. Thirty-two (32) Eighty (80) acres in N½ S½ N½ Thirty-four (34) acres in S½ S½ N½ Sec. Twenty-nine (29) Eighty (80) acres in E½ N½ N½ Forty (40) acres in N½ N½ N½. Thirty (30) acres in S½ N½ N½. Sec. Thirty-two (32) T 34 N. R. 109 W.

The right to water hereby confirmed and established is limited to irrigation and the use is restricted to the place where acquired and to the purpose for which acquired; rights for irrigation not to exceed one cubic foot per second for each seventy acres of land for which appropriation is herein determined and established.

IN TESTIMONY WHEREOF, I, Fred Bond, President of the State Board of Control, have hereunto set my hand this day of, A. D. 190 and caused the seal of said Board to be hereunto affixed.

ATTEST: Secretary. President.

Figure L.2. Example Certificate of Appropriation of Water provided in the New Fork WRCMT

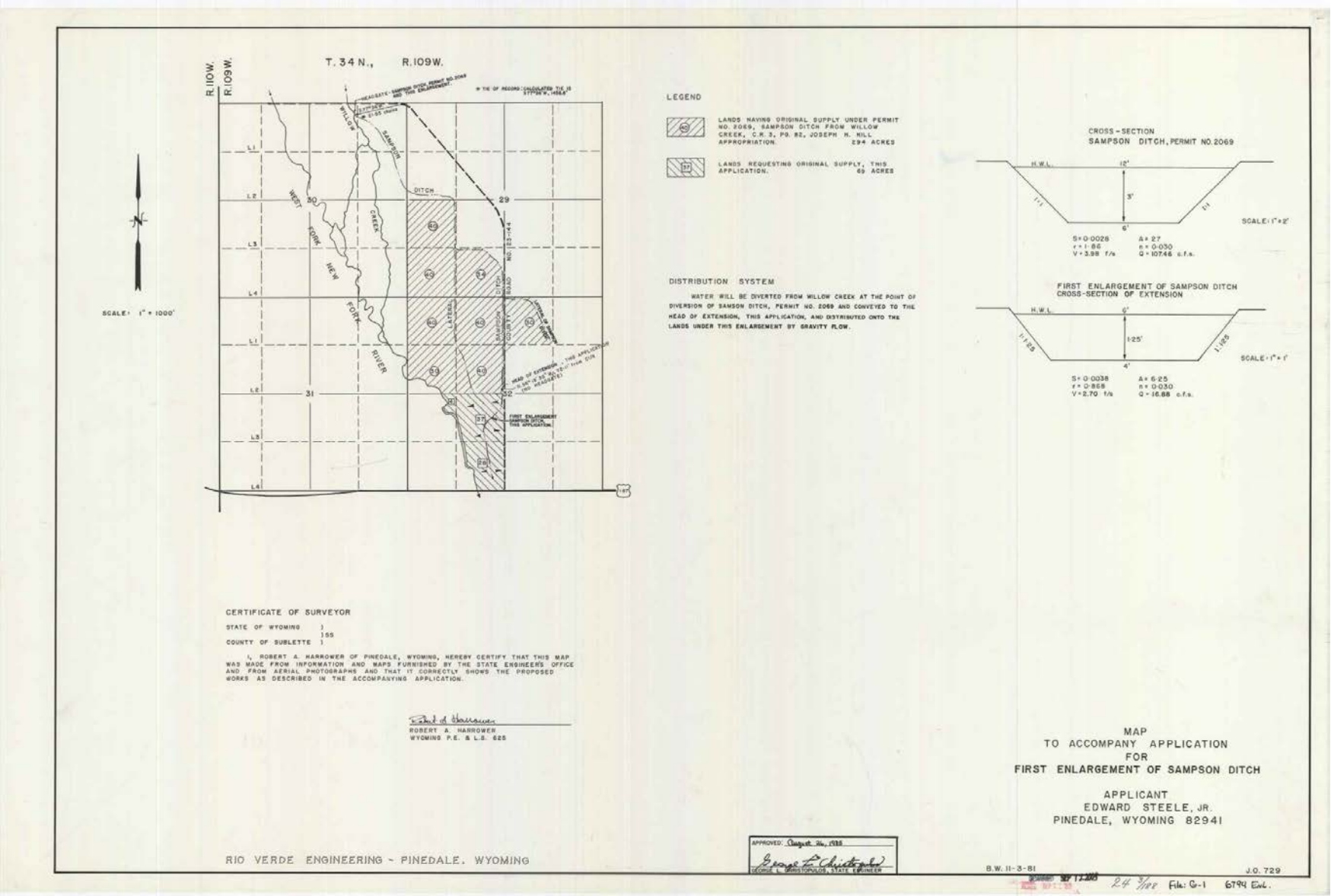

Figure L.3. Example conveyance system map provided in the New Fork WRCMT

TABULATED WATER RIGHTS (CFS)									
			Secondary Supply			Supplemental Supply		
PERMIT #	PROOF #	CFS	PERMIT #	PROOF #	Ac-Ft	PERMIT #	PROOF #	Ac
P18601D	23429	0.17	P1817D	4225	68.28			
P5289E	23430	1.75	P1817D	4225	131.30			
			P1631E	8383	11.89			
			P1631E	8383	123.50			
			P4951E	24339	103.20			
			P4954E	21555	422.09			
			P392E	4226	19.6			
			P626E	5487	21.49			
	TOTAL:	1.92		Total:	901.35		Total:	0.00

Figure L.4. Example of the tabulated water rights provided in the New Fork WRCMT for each point of diversion and conveyance system

POINT OF DIVERSION INFORMATION

Diversion ID: Pinedale Water Supply Pipeline

Permit Number(s): P1817D, P18601D, P392E, P626E, P1631E, P4951E, P4954E, P5289E

Diversion Type: Pipeline Intake (Original: 16" dia., Second: 36" dia.)

Conveyance Type /Size: East Transmission line (24" dia. – 12,000 LF)
West Transmission line (30" dia. – 6,700 LF => 24" dia. – 10,400 LF)

Permitted Volumetric Flow: 1.92 cfs

Permitted Secondary Supply: 901.35 Ac-Ft

Figure L.5. Example summary information provided in the New Fork WRCMT for each point of diversion and conveyance system

L.3.2 New Fork WRCMT User's Guide

The New Fork WRCMT tool is organized within the 'WRCMT' folder on the DVD Deliverable (**Figure L.6**). The tool can be accessed by opening the "New_Fork_Mapping_Application.mxd" file (requires ESRI ArcGIS for Desktop software). There are two supporting geodatabases that contain all GIS data used within the tool (**Figure L.7**). The "NEW_FORK_PODs_DITCHES.gdb" databases contains the

Points of Diversion ("POD"), Ditches/Conveyance ("DITCHES"), and a network of supplemental ditches ("DITCH_EXTENSIONS") that were digitized within Google Earth to provide a better understanding of the connectedness of various elements of the system. Additional hydrographic features are stored in the "SUPPLEMENTAL_GIS.gdb" database, sourced from the National Hydrographic Dataset. The supplemental Water Right information that is referenced in **Figure L.2**, **Figure L.3**, **Figure L.4**, and **Figure L.5** are stored within the "WATER_RIGHTS" folder, which organizes all of the information by Diversion/Conveyance name, as seen in **Figure L.8**.

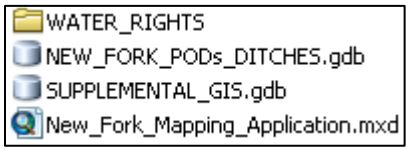

Figure L.6. New Fork WRCMT data organization

Figure L.7. New Fork WRCMT geodatabases

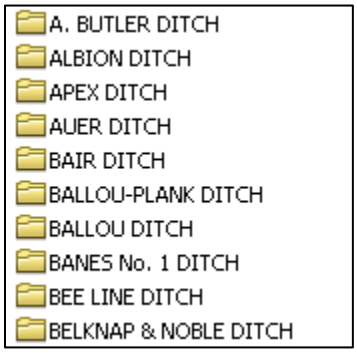

Figure L.8. Water Right document folders

Once the MXD file is opened, the user is presented with a map interface (**Figure L.9)**. The orange highlighted points and orange hash-marked line features represent Diversions and Ditch/Conveyances, which can be clicked once the Hyperlink Button is activated (lightning-bolt icon circled in purple).

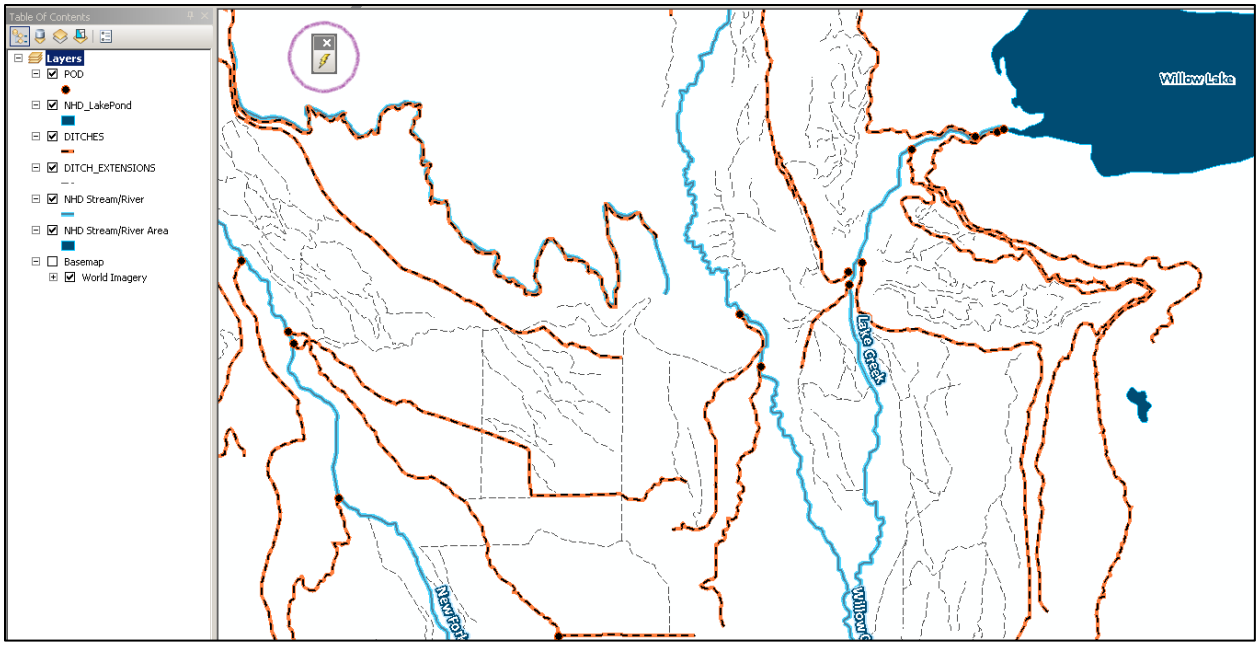

Figure L.9. New Fork WRCMT map interface

Once a feature is clicked, a window will open that presents the user an opportunity to navigate the various Water Right documents, as seen in **Figure L.10**.

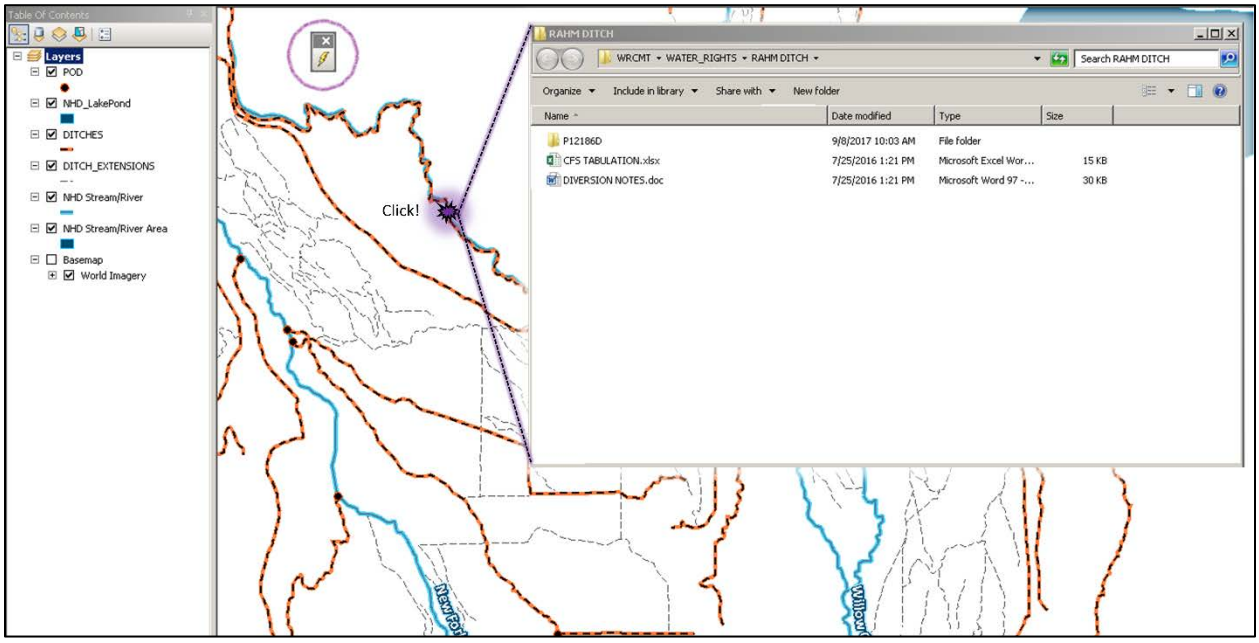

Figure L.10. Navigating Water Right information

L.3.3 Uncertainty

The information contained in the New Fork WRCMT was obtained largely from the Tabulation of Adjudicated Water Rights of the State of Wyoming (updated February 2016) and from information obtained on-line from the SEO e-Permit System accessed on in January 2017. As a result, the information contained in the New Fork WRCMT is accurate through February 2016. This tool may need to be updated in the future as the SEO updates their water rights information.

Attachment 1 - Tabulation of Adjudicated Water Rights of the State of Wyoming – New Fork River Watershed

The following was manually excerpted from the Tabulation of Adjudicated Water Rights of the State of Wyoming – Water Division IV to provide easy access to water rights information for watershed stakeholders in the New Fork River watershed.

INDEX

TO TABULATION OF

ADJUDICATED SURFACE WATER RIGHTS

FOR

Water Division Number IV

NEW FORK RIVER

Stream Name	Page No
AIRPORT SLOUGH DRAW, Tributaries of pole creek, west fork new fork river, new fork river, green river	19
ALMQUIST SWALE, Tributaries of airport slough draw, pole creek, west fork new fork river, new fork river, green river	19
ANTELOPE DRAW, Tributaries of duck creek, west fork new fork river, new fork river, green river	27
ANTELOPE DRAW, Tributaries of pine creek, west fork new fork river, new fork river, green river	25
ASPEN CREEK, Tributaries of spring creek, silver creek, east fork new fork river, new fork river, green river	8
BALL NO. 1 SPRINGS, Tributaries of east fork new fork river, new fork river, green river	7
BAM CREEK, Tributaries of bim creek, west fork new fork river, new fork river, green river	33
BARBER CREEK, Tributaries of west fork new fork river, new fork river, green river	27
BARGER SLOUGH, Tributaries of west fork new fork river, new fork river, green river	16
BIM CREEK, Tributaries of west fork new fork river, new fork river, green river	33
BINNING CREEK, Tributaries of willow creek, west fork new fork river, new fork river, green river	29
BOBBY DRAW, Tributaries of west fork new fork river, new fork river, green river	21
BOELTE DRAW, Tributaries of fall creek, pole creek, west fork new fork river, new fork river, green river	20
BOULDER CREEK, Tributaries of west fork new fork river, new fork river, green river	17
BOULDER DRAW, Tributaries of elk gulch, ward ball draw, west fork new fork river, new fork river, green river	16
BOULTER CREEK, Tributaries of east fork new fork river, new fork river, green river	8
BRANCH OF ALKALI CREEK, Tributaries of alkali creek, new fork river, green river	4
BRAZILL DRAW, Tributaries of pine creek, west fork new fork river, new fork river, green river	25
BROWN'S DRAW, Tributaries of little muddy creek, muddy creek, east fork new fork river, new fork river, green river	10
BURNT LAKE, Tributaries of fall creek, pole creek, west fork new fork river, new fork river, green river	20

(Surface Water rights are listed in the table by the main stream and tributaries complete; beginning at the mouth of the stream or at the state boundary line and proceeding toward the source of such main stream Numbers following a source name refer to the section, township and range which is the mouth of the stream or creek or where it enters the stream or creek to which it is a tributary. This index is arranged alphabetically by the first line of the tributary title in the table, then by table page number.)

Stream Name	Page No
BURROUGH DRAW, Tributaries of duck creek, west fork new fork river, new fork river, green river	27
CACKLIN DRAW, Tributaries of alkali creek, new fork river, green river	5
CCC DRAW, Tributaries of pine creek, west fork new fork river, new fork river, green river	25
COTTONWOOD CREEK, Tributaries of east fork new fork river, new fork river, green river	9
CRANDALL DRAW, Tributaries of west fork new fork river, new fork river, green river	21
CRAWLER DRAW, Tributaries of east fork new fork river, new fork river, green river	6
DALLY SPRING, Tributaries of willow creek, west fork new fork river, new fork river, green river	32
DEER DRAW, Tributaries of willow creek, west fork new fork river, new fork river, green river	29
DENNEY DRAW, Tributaries of crandall draw, west fork new fork river, new fork river, green river	21
DIVIDE CREEK, Tributaries of boulder creek, west fork new fork river, new fork river, green river	18
DUCK CREEK, Tributaries of west fork new fork river, new fork river, green river	26
DUCK HAVEN DRAW, Tributaries of poco diablo draw, marsh creek, west fork new fork river, new fork river, green river	32
DUMPHREY CREEK, Tributaries of willow creek, west fork new fork river, new fork river, green river	31
DYLAN CREEK, Tributaries of marsh creek, west fork new fork river, new fork river, green river	33
EAST FORK DRAW NO. 3, Tributaries of crawler draw, east fork new fork river, new fork river, green river	6
EAST FORK DRAW NO. 4, Tributaries of east fork draw no. 5, east fork new fork river, new fork river, green river	6
EAST FORK DRAW NO. 5, Tributaries of east fork new fork river, new fork river, green river	6
EAST FORK DRAW NO. 6, Tributaries of east fork new fork river, new fork river, green river	7
EAST FORK NEW FORK RIVER, Tributaries of new fork river, green river	5
EDITH CREEK, Tributaries of marsh creek, west fork new fork river, new fork river, green river	33

(Surface Water rights are listed in the table by the main stream and tributaries complete; beginning at the mouth of the stream or at the state boundary line and proceeding toward the source of such main stream Numbers following a source name refer to the section, township and range which is the mouth of the stream or creek or where it enters the stream or creek to which it is a tributary. This index is arranged alphabetically by the first line of the tributary title in the table, then by table page number.)

Stream Name	Page No.
ELK GULCH, Tributaries of ward ball draw, west fork new fork river, new fork river, green river	16
FALL CREEK, Tributaries of pole creek, west fork new fork river, new fork river, green river	19
FELTNER DRAW, Tributaries of pine creek, west fork new fork river, new fork river, green river	25
FIELD CREEK, Tributaries of lovatt creek, spring creek, silver creek, east fork new fork river, new fork river, green river	8
FLC SPRING, Tributaries of flc spring draw, pine creek, west fork new fork river, new fork river, green river	26
FOWLER DRAW, Tributaries of pole creek, west fork new fork river, new fork river, green river	19
FREMONT LAKE, Tributaries of pine creek, west fork new fork river, new fork river, green river	26
HALF MOON LAKE, Tributaries of pole creek, west fork new fork river, new fork river, green river	20
HIDDEN VALLEY CREEK, Tributaries of pole creek, west fork new fork river, new fork river, green river	20
HIGH GROSS CREEK, Tributaries of east fork new fork river, new fork river, green river	8
JERRY SPRING, Tributaries of little muddy creek, muddy creek, east fork new fork river, new fork river, green river	10
KERSHISNIK CREEK, Tributaries of pine creek, west fork new fork river, new fork river, green river	25
LAKE CREEK, Tributaries of willow creek, west fork new fork river, new fork river, green river	29
LATIGO CREEK, Tributaries of new fork river, green river	4
LITTLE BURNT DRAW, Tributaries of boulder creek, west fork new fork river, new fork river, green river	18
LITTLE DUCK CREEK, Tributaries of duck creek, west fork new fork river, new fork river, green river	27
LITTLE MUDDY CREEK, Tributaries of muddy creek, east fork new fork river, new fork river, green river	10
LITTLE WILLOW CREEK, Tributaries of willow creek, west fork new fork river, new fork river, green river	32
LOVATT CREEK, Tributaries of spring creek, silver creek, east fork new fork river, new fork river, green river	8
MARSH CREEK, Tributaries of west fork new fork river, new fork river, green river	32

(Surface Water rights are listed in the table by the main stream and tributaries complete; beginning at the mouth of the stream or at the state boundary line and proceeding toward the source of such main stream. Numbers following a source name refer to the section, township and range which is the mouth of the stream or creek or where it enters the stream or creek to which it is a tributary. This index is arranged alphabetically by the first line of the tributary title in the table, then by table page number.)

Stream Name	Page No.
MIDTOWN DRAW, Tributaries of pine creek, west fork new fork river, new fork river, green river	24
MINING CLAIM DRAW, Tributaries of new fork river, green river	4
MORGAN DRAW, Tributaries of west fork new fork river, new fork river, green river	27
MUDDY CREEK, Tributaries of east fork new fork river, new fork river, green river	9
NC SPRING, Tributaries of nc spring draw, west fork new fork river, new fork river, green river	16
NELSON CREEK, Tributaries of cottonwood creek, east fork new fork river, new fork river, green river	9
NERD CREEK, Tributaries of new fork river, green river	4
NEW FORK RIVER, Tributaries of green river	3
NEW SPRINGS, Tributaries of little duck creek, duck creek, west fork new fork river, new fork river, green river	27
NORTH SPRINGS DRAW, Tributaries of fall creek, pole creek, west fork new fork river, new fork river, green river	20
OLD CANOE CREEK, Tributaries of half moon lake, pole creek, west fork new fork river, new fork river, green river	20
PARK CREEK, Tributaries of surveyor creek, half moon lake, pole creek, west fork new fork river, new fork river, green river	21
PFISTERER CREEK, Tributaries of little duck creek, duck creek, west fork new fork river, new fork river, green river	27
PINE CREEK, Tributaries of west fork new fork river, new fork river, green river	21
POCKET CREEK, Tributaries of cottonwood creek, east fork new fork river, new fork river, green river	9
POCO DIABLO DRAW, Tributaries of marsh creek, west fork new fork river, new fork river, green river	32
POLE CREEK, Tributaries of west fork new fork river, new fork river, green river	19
QUEALY SPRING, Tributaries of surveyor creek, half moon lake, pole creek, west fork new fork river, new fork river, green river	21
RICHARDSON DRAW, Tributaries of brazill draw, pine creek, west fork new fork river, new fork river, green river	25
RITCHIE SPRINGS, Tributaries of muddy creek, east fork new fork river, new fork river, green river	10

(Surface Water rights are listed in the table by the main stream and tributaries complete; beginning at the mouth of the stream or at the state boundary line and proceeding toward the source of such main stream. Numbers following a source name refer to the section, township and range which is the mouth of the stream or creek or where it enters the stream or creek to which it is a tributary. This index is arranged alphabetically by the first line of the tributary title in the table, then by table page number.)

Stream Name	Page No.
RUMPLER DRAW, Tributaries of west fork new fork river, new fork river, green river	21
SAND SPRINGS CREEK, Tributaries of new fork river, green river	5
SCAB CREEK, Tributaries of spring creek, silver creek, east fork new fork river, new fork river, green river	8
SCHOOL SECTION CREEK, Tributaries of dumphrey creek, willow creek, west fork new fork river, new fork river, green river	31
SPRING CREEK, Tributaries of silver creek, east fork new fork river, new fork river, green river	8
SIGNET DRAW, Tributaries of marsh creek, west fork new fork river, new fork river, green river	32
SILVER CREEK, Tributaries of east fork new fork river, new fork river, green river	7
SISHING CREEK, Tributaries of marsh creek, west fork new fork river, new fork river, green river	33
SKINNER DRAW, Tributaries of feltner draw, pine creek, west fork new fork river, new fork river, green river	25
SNYDER SPRING, Tributaries of snyder spring draw, denney draw, crandall draw, west fork new fork river, new fork river, green river	21
SOUTH BRANCH CREEK, Tributaries of new fork river, green river	5
SPILL CREEK, Tributaries of pine creek, west fork new fork river, new fork river, green river	25
SPRING BRANCH, Tributaries of east fork new fork river, new fork river, green river	6
SPRING BRANCH, Tributaries of west fork new fork river, new fork river, green river	33
SPRING CREEK, Tributaries of barber creek, west fork new fork river, new fork river, green river	28
SPRING CREEK, Tributaries of willow creek, west fork new fork river, new fork river, green river	32
SPRING DRAW, Tributaries of school section creek, dumphrey creek, willow creek, west fork new fork river, new fork river, green river	32
SPRING GULCH CREEK, Tributaries of lake creek, willow creek, west fork new fork river, new fork river, green river	31
SPRING NO. 1 AREA, Tributaries of east fork new fork river, new fork river, green river	7
SPRING NO. 1, Tributaries of east fork new fork river, new fork river, green river	7

(Surface Water rights are listed in the table by the main stream and tributaries complete; beginning at the mouth of the stream or at the state boundary line and proceeding toward the source of such main stream Numbers following a source name refer to the section, township and range which is the mouth of the stream or creek or where it enters the stream or creek to which it is a tributary. This index is arranged alphabetically by the first line of the tributary title in the table, then by table page number.)

Stream Name	Page No.
SPRING NO. 2 AREA, Tributaries of east fork new fork river, new fork river, green river	7
SPRING NO. 2, Tributaries of east fork new fork river, new fork river, green river	7
STANLEY SPRINGS, Tributaries of boulder creek, west fork new fork river, new fork river, green river	18
SURVEYOR CREEK, Tributaries of half moon lake, pole creek, west fork new fork river, new fork river, green river	21
SYLVAN SPRING, Tributaries of pine creek (at fremont lake), west fork new fork river, new fork river, green river	26
THOMPSON SLOUGH, Tributaries of pine creek, west fork new fork river, new fork river, green river	25
TURK DRAW, Tributaries of burts spring draw, east fork new fork river, new fork river, green river	7
TWO BUTTES DRAW, Tributaries of new fork river, green river	4
UNNAMED SPRINGS NO. 1&2, Tributaries of fremont lake, pine creek, west fork new fork river, new fork river, green river	26
UNNAMED SPRINGS NO. 1&2, Tributaries of half moon lake, pole creek, west fork new fork river, new fork river, green river	20
UPPER DRAW, Tributaries of burts spring draw, east fork new fork river, new fork river, green river	7
WARD BALL DRAW, Tributaries of west fork new fork river, new fork river, green river	16
WATER STORED IN ENL WILLOW LAKE RESERVOIR, Tributaries of supplied from lake creek, willow creek, west fork new fork river, new fork river, green river	30
WATER STORED IN FREMONT LAKE RESERVOIR, Tributaries of pine creek, west fork new fork river, new fork river, green river	24
WEST FORK NEW FORK RIVER, Tributaries of new fork river, green river	10
WILLOW CREEK, Tributaries of west fork new fork river, new fork river, green river	28
WILLOW SPRING, Tributaries of west fork new fork river, new fork river, green river	21
WISHBONE DRAW, Tributaries of little burnt draw, boulder creek, west fork new fork river, new fork river, green river	18

(Surface Water rights are listed in the table by the main stream and tributaries complete; beginning at the mouth of the stream or at the state boundary line and proceeding toward the source of such main stream Numbers following a source name refer to the section, township and range which is the mouth of the stream or creek or where it enters the stream or creek to which it is a tributary. This index is arranged alphabetically by the first line of the tributary title in the table, then by table page number.)

EXPLANATION OF TABLES FOR SURFACE WATER

Ordering

Water rights are shown under the heading of the stream from which diversion is actually made according to the best information available. However, in some cases the source of supply which was given in the early adjudication as the main stream or the name of the tributary was in error.

First: The Main stream; parantheticals following a source name indicate either the mouth of a stream or the location of a spring or springs.
Second: Tributary sequences begin at the mouth of the stream or at the state boundary line and proceed toward the source of the main stream.
Third: Each stream, according to the date of priority of the appropriation.

Permit Explanation

T1234-	Territorial Appropriation	Court Decree priorities are indicated by number.
P592R	Permit No. 592 Reservoir	Where permits do not exist the column has been left blank.
P10SR	Permit No. 10 Stock Reservoir	In double permits (5686-6684), the latter is an amendment of the first. This
P139E	Permit No. 139 Enlargement	occurred before petitions were required.

Priority

Order of administration of priorities:	Month, Day, Year	5-15-1884
	Month and Year	5- 0-1884
	Specified Season and Year	Season 1884
	Year only	1884
	Before Year	Before 1884

Board Orders or Court Orders may also establish a specific priority.

Abbreviations

CFS	Cubic feet per second, for ditches	ORI	Original supply	HG Loc.	Headgate location, reservoir or spillway, given by section, township, and range (30-55-101)
ACFT	acre-feet, for reservoirs	SUP	Supplemental supply		
GPM	gallons per minute	SEC	Secondary supply	I.F.	Instream Flow

Use:

AQU	Aquaculture	ICE	Ice Cutting	REC	Recreation
CBM	Coal Bed Methane	IND	Industrial	RES	Reservoir Supply
CHE	Chemical	IRR	Irrigation	REW	Reclamation Watering
CIS	Consumptive Instream Flow	ISF	Instream Flow (W.S. 41 3 1001, et seq.)	SED	Sedimentation
CNG	Coal Bed Natural Gas	MAI	Maintenance (Equipment Washing)	SNO	Snow Making
COM	Commercial	MAN	Manufacturing	STE	Steam
DOM	Domestic Use	MEC	Mechanical	STKNDMS	Stock and Domestic Use
DSP	Domestic Supply	MED	Medicinal	STO	Stock (STO) Use
ECAP	Existing Capacity	MIL	Milling	STS	Stock Supply
ERO	Erosion Control	MIN	Mining	TEM	Temporary
FIR	Fire Protection (reservoir only)	MIS	Miscellaneous	TENL	Total Enlargement for this application
FIS	Fish Propagation	MUN	Municipal	TRA	Transportation
FLO	Flood Control	OIL	Oil Drilling	UTL	Utilities
FTH	Flow Through	OTH	Other	W&S	Wild and Scenic
GWR	Ground Water Recharge	PCT	Pollution Control	WET	Wetlands
HEX	Heat Extraction	POW	Power	WL	Wildlife
HYD	Hydropower Generation	RAI	Railroad		

EXPLANATION OF TABLES FOR SURFACE WATER

Unit of Measure

Wyoming law provides that measurement of flowing water shall be in terms of cubic feet per second of time. The volume of stored water is measure in acre-feet.

1 cubic foot	7.48 gallons, which weigh 62.4 pounds
1 cubic foot per second	448.83 gallons per minute
1 cubic foot per second	26,930.00 gallons per hour
1 cubic foot per second	646,317.00 gallons per day
1 cubic foot per second	1.9835 acre-feet per day; 2 acre-feet per day is used for administration of small heads of water
1 acre foot	43,560.00 cubic feet or the quantity of water necessary to cover one acre one foot in depth

Permit No.	Facility Name	Appropriator	Priority	Use	C.F.S/AF	Acres	HG LOC	Proof No.	CR No.
	NEW FORK RIVER, TRIBUTARIES OF GREEN RIVER								
P1738.0D	WARDELL DITCH	JOHN WARDELL;	02/04/1898	IRR_SW	1.850	130	030N-110W-28-NESW	8390	CR CC26/400
P551.0E	ENLARGED WARDELL DITCH	OSCAR JOHNSON;	06/20/1900	IRR_SW	3.250	228	030N-110W-28-NESW	10801	CR CC31/455

Permit No.	Facility Name	Appropriator	Priority	Use	C.F.S/AF	Acres	HG LOC	Proof No.	CR No.
P3171.0D	HANNA NO. 2 DITCH	LOUISE TAYLOR;	05/13/1901	IRR_SW	2.010	141	030N-110W-14-NENE	8371	CR CC26/384
P3406.0D	BERTRAM DITCH	JAMES BERTRAM;	09/09/1901	IRR_SW	3.220	226	031N-109W-16-SWSE	6666	CR CC20/017
P3771.0D	BRANDT DITCH	CHRIS BRUNDT;	03/14/1902	IRR_SW	3.400	238.13	031N-109W-12-NWSW	6667	CR CC20/018
P3771.0D	BRANDT DITCH	NIELS C.M. THYGESEN;	03/14/1902	IRR_SW	2.270	158.87	031N-109W-12-NWSW	8369	CR CC26/382
P3825.0D	MONUMENT DITCH	GEORGE LOVATT;	04/12/1902	IRR_SW	1.420	100	031N-108W-05-SESW	6673	CR CC20/024
P925.0E	ENLARGED NEW FORK DITCH	ELEANOR LOVATT;	10/04/1902	IRR_SW	2.810	197.38	031N-109W-01-SENE	8372	CR CC26/385
P1409.0E	ENLARGED HANNA NO. 2 DITCH	EDWARD LARK;	12/10/1904	IRR_SW	2.430	170.41	030N-110W-14-NENE	6671	CR CC20/022
P6364.0D	GRIFFIN NO. 2 DITCH	NIELS C. THYGESEN;	12/13/1904	IRR_SW	0.840	59	031N-109W-11-SESE	8370	CR CC26/383
P6364.0D	GRIFFIN NO. 2 DITCH	E. MACK;	12/13/1904	IRR_SW	2.306	161.72	031N-109W-11-SESE	19738	CR CC46/171
P6925.0D	A. BUTLER DITCH	ANDREW BUTLER;	10/13/1905	IRR_SW	2.470	173	031N-109W-29-	9962	CR CC30/122
P1660.0E	ENLARGED NEW FORK DITCH	J A LOVATT;	12/22/1906	IRR_SW	1.460	101.89	031N-109W-01-SENE	9963	CR CC30/123
P7676.0D	EAST DITCH	J. LOVATT;	12/22/1906	IRR_SW	0.480	34	031N-109W-01-SENE	9964	CR CC30/124
P1759.0E	ENLARGED NEW FORK DITCH	ELEANOR LOVATT;	06/29/1907	IRR_SW	1.710	120	031N-109W-01-SENE	8373	CR CC26/386
P1890.0E	ENLARGED BERTRAM DITCH	CHARLES OLSON;	05/19/1908	IRR_SW	10.350	725	031N-109W-16-SWSE	21101	CR CC49/406
P12261.0D	PENNOCK DITCH ACIPT COPPES GRIFFIN NO. 2 DITCH	ED. PENNOCK;	02/19/1914	IRR_SW	1.410	98.4	031N-109W-15-SWNE	15224	CR CC39/264
P3196.0E	ENLARGED HANNA NO. 2 DITCH	CHARLES OLSEN;	05/14/1915	IRR_SW	0.570	40	030N-110W-14-NENE	19989	CR CC46/453
P16015.0D	O'LAUGHLIN DITCH	ANNIE MALONEK;	10/11/1919	IRR_SW	0.970	68	031N-108W-05-SESW	19480	CR CC45/526
P4444.0E	ENLARGED BERTRAM DITCH	E G MACK;	03/06/1925	IRR_SW	1.220	85.13	031N-109W-16-SWSE	19739	CR CC46/172
P6360.0E	ENLARGED WARDELL DITCH	MARTIN JR AND CELIA JANE WARDELL;	04/20/1970	IRR_SW	2.990	209.6	030N-110W-28-SENW	30075	CR CC70/201
P11717.0R	SCATTERGUN RESERVOIR	AARON C AND NACONA M HENGEN;	01/14/2002	FIS, WL	1.390AF	0	031N-109W-21-NWSE	40239	CR CR19/030
P34112.0D	SUBLETTE COUNTY NO. 9 NEW FORK RIVER PUMP	BOARD OF SUBLETTE COUNTY COMMISSIONERS;	02/17/2009	FIR, IND_SW	0.000	0	030N-110W-22-NENE	40909	CR CC92/154
P34425.0D	SUBLETTE COUNTY NO. 18 NEW FORK RIVER PUMP	BOARD OF SUBLETTE COUNTY COMMISSIONERS;	08/26/2010	FIR, IND_SW	2.780	0	031N-108W-05-NESE	41368	CR CC94/039
	LATIGO CREEK, TRIBUTARIES OF NEW FORK RIVER, GREEN RIVER								
P11705.0R	LARIAT RESERVOIR	WESLEY MILLER; WILLIAM MILLER; 67 FAMILY TRUST;	10/15/2001	FIS, WL	11.460AF	0	030N-110W-22-SENW	40000	CR CR18/202
P11706.0R	LATIGO RESERVOIR	WESLEY MILLER; WILLIAM MILLER; 67 FAMILY TRUST;	10/15/2009	FIS, WL	12.700AF	0	030N-110W-22-NWNW	40001	CR CR18/203
	MINING CLAIM DRAW, TRIBUTARIES OF NEW FORK RIVER, GREEN RIVER								
P7974.0S	MINING CLAIM STOCK RESERVOIR	U.S. DEPT. OF THE INT., BUREAU OF LAND MANAGEMENT;	02/18/1975	STO	3.470AF	0	030N-109W-28-NENE	31640	CR CR08/092
	NERD CREEK, TRIBUTARIES OF NEW FORK RIVER, GREEN RIVER								
P11846.0R	NERD RANCH RESERVOIR	ULTRA RESOURCES, INC.;	07/29/2002	FIS, WL	6.240AF	0	031N-109W-11-NENW	40240	CR CR19/031
	TWO BUTTES DRAW, TRIBUTARIES OF NEW FORK RIVER, GREEN RIVER								
P7923.0S	TWO BUTTES NO 285 STOCK RESERVOIR	U.S. DEPT. OF THE INT., BUREAU OF LAND MANAGEMENT;	09/03/1974	STO	2.000AF	0	032N-109W-15-SENE	31641	CR CR08/093
P7868.0S	SHEFFY NO. 1 STOCK RESERVOIR	IVAN SHEFFY;	10/23/1974	STO	14.000AF	0	032N-108W-19-SESW	31642	CR CR08/094
P28010.0D	CHIDSEY NO. 1 DITCH	CHARLES CHIDSEY;	04/01/1980	IRR_SW	0.140 ORI SUP	10 9	031N-109W-01-SWNE	33447	CR CC75/049
P28011.0D	CHIDSEY NO. 2 DITCH	CHARLES CHIDSEY;	04/19/1983	IRR_SW	0.000	104.5	031N-109W-01-SWNE	33448	CR CC75/050
	BRANCH OF ALKALI CREEK, TRIBUTARIES OF ALKALI CREEK, NEW FORK RIVER, GREEN RIVER								
P4443.0R	NELSON RESERVOIR	NATIONAL LIVE STOCK CO.;	12/20/1930	STO	8.900AF	0	031N-108W-34-SESE	23080	CR CR01/249

Permit No.	Facility Name	Appropriator	Priority	Use	C.F S/AF	Acres	HG LOC	Proof No.	CR No.
	CACKLIN DRAW, TRIBUTARIES OF ALKALI CREEK, NEW FORK RIVER, GREEN RIVER								
P7905.0S	CACKLIN LOU NO 137 STOCK RESERVOIR	USDI BUREAU OF LAND MANAGEMENT;	09/03/1974	STO	4.000AF	0	030N-108W-12-SENW	31643	CR CR08/095
	SAND SPRINGS CREEK, TRIBUTARIES OF NEW FORK RIVER, GREEN RIVER								
P17006.0D	CASEY DITCH	HARRY KLEIN;	08/18/1925	IRR_SW	0.470	33	031N-108W-25-NENW	19925	CR CC46/375
P4914.0E	ENLARGED CASEY DITCH	LOUIS NELSON;	09/08/1933	IRR_SW	1.000	70	031N-108W-25-NENW	21418	CR CC52/141
	SOUTH BRANCH CREEK, TRIBUTARIES OF NEW FORK RIVER, GREEN RIVER								
P5080.0D	MORNING STAR DITCH	JOSIAH LOVATT;	10/04/1902	IRR_SW	3.240	227.35	031N-108W-05-NENW	6672	CR CC20/023
	EAST FORK NEW FORK RIVER, TRIBUTARIES OF NEW FORK RIVER, GREEN RIVER								
T4232.0-	MERRICK DITCH	HANS OLSON;	04/14/1889	IRR_SW	0.570	40	031N-106W-09-NENE	4232	CR CA03/087
P52.0D	STEELE DITCH	EDWARD STEELE;	05/14/1891	IRR_SW	1.150	80	032N-107W-08-SESE	4233	CR CB03/087
P95.0D	HOFF NO. 1 DITCH	S. HOFF;	07/10/1891	IRR_SW	2.150	150	032N-107W-07-SESE	4234	CR CA03/088
P593.0D	STEELE NO. 2 DITCH	EDWARD STEELE;	10/10/1893	IRR_SW	1.000	70	032N-107W-09-NWSE	4235	CR CB03/088
P1622.0D	GILLIGAN AND IWAN DITCH	GILLIAGAN & IWAN;	10/08/1897	IRR_SW	9.000	630	031N-106W-09-NENE	4236	CR CA03/089
P1687.0D	JORGENSEN DITCH	EAST FORK CATTLE COMPANY;	12/11/1897	IRR_SW	11.270	789	031N-106W-09-NENE	4237	CR CB03/089
P1851.0D	ROCKY MOUNTAIN DITCH	FRED MORRIS;	06/06/1898	IRR_SW	2.180	154	031N-106W-10-SWNW	4239	CR CB03/090
P1851.0D	ROCKY MOUNTAIN DITCH	JACOB IKE;	06/06/1898	IRR_SW	2.070	145	031N-106W-10-SWNW	4238	CR CA03/090
P1943.0D	TANGLEFOOT DITCH	HARRY HITTLE;	08/05/1898	IRR_SW	1.910	134	031N-106W-09-NENE	4240	CR CA03/091
P434.0E	ENLARGED ROCKY MOUNTAIN DITCH	ELBERT ALLEN;	05/31/1899	IRR_SW	4.120	289	031N-106W-10-SWNW	5459	CR CC06/072
P453.0E	ENLARGED MERRICK DITCH	HANS OLSON;	06/05/1899	IRR_SW	1.700	120	031N-106W-09-NENE	4241	CR CB03/091
P2155.0D	ALBION DITCH	KNUTE JOMEN;	06/12/1899	IRR_SW	2.130	150	031N-106W-09-NWNW	5460	CR CC06/073
P526.0E	ENLARGED ALBION DITCH	JOMEN & WHITE;	05/08/1900	IRR_SW	5.760	405	031N-106W-09-NWNW	5461	CR CC06/074
P539.0E	ENLARGED ROCKY MOUNTAIN DITCH	JACOB IKE ESTATE;	05/23/1900	IRR_SW	1.450	103	031N-106W-10-SWNW	5462	CR CC06/075
P539.0E	ENLARGED ROCKY MOUNTAIN DITCH	Mrs LIZZIE ALLEN;	05/23/1900	IRR_SW	4.440	312	031N-106W-10-SWNW	5463	CR CC06/076
P589.0E	ENLARGED TANGLEFOOT DITCH	JAMES JENSEN;	10/24/1900	IRR_SW	2.280	160	031N-106W-09-NENE	5464	CR CC06/077
P3349.0D	BANES NO. 1 DITCH	WILLIAM BANES;	08/05/1901	IRR_SW	3.500	245	031N-106W-05-SWSW	6489	CR CC17/077
P730.0E	ENLARGED JORGENSEN DITCH	MAY HITTLE;	10/16/1901	IRR_SW	3.140	220	031N-106W-09-NENE	6488	CR CC17/076
P740.0E	ENLARGED ROCKY MOUNTAIN DITCH	FRED AND ELI MORRIS;	11/14/1901	IRR_SW	1.110	78	031N-106W-10-SWNW	6674	CR CC20/025
P3559.0D	TIBBALS DITCH	BARNEY TIBBALS;	11/25/1901	IRR_SW	20.250	1417.66	031N-106W-04-SESW	5465	CR CC06/078
P3726.0D	HITTLE NO. 1 DITCH	AMANDA HITTLE;	02/14/1902	IRR_SW	1.130	80	031N-106W-07-SWNW	5466	CR CC06/079
P786.0E	ENLARGED JORGENSEN DITCH	AMANDA HITTLE;	02/14/1902	IRR_SW	2.210	155	031N-106W-09-NENE	5467	CR CC06/080
P875.0E	ENLARGED ALBION DITCH	HANS OLSON;	07/05/1902	IRR_SW	1.130	80	031N-106W-09-NWNW	5468	CR CC06/081
P876.0E	ENLARGED MERRICK DITCH	KNUTE JOMEN;	07/05/1902	IRR_SW	2.280	160	031N-106W-09-NENE	5469	CR CC06/082
P5202.0D	BENSON DITCH	ANDREW BENSON;	12/01/1902	IRR_SW	0.710	50	031N-107W-03-NWNE	6441	CR CC11/016
P1137.0E	ENLARGED GILLIGAN AND IVEN DITCH	JOHN GILLIGAN;	12/11/1903	IRR_SW	4.570	320	031N-106W-09-NENE	10859	CR CC32/013
P6524.0D	ARBOR DITCH	THOMAS TIBBALS;	03/04/1905	IRR_SW	0.570	40	031N-106W-04-SESW	8374	CR CC26/387
P6803.0D	LAKE DITCH	HANNAH JENSEN;	07/24/1905	IRR_SW	3.420	240	031N-106W-10-SWNE	9970	CR CC30/130
P6803.0D	LAKE DITCH	METINUS JENSEN;	07/24/1905	IRR_SW	4.570	320	031N-106W-10-SWNE	9971	CR CC30/131
P6803.0D	LAKE DITCH	DAVID CLARK;	07/24/1905	IRR_SW	2.280	160	031N-106W-10-SWNE	9972	CR CC30/132
P6836.0D	SUPPLY AND SOUTH SIDE DITCH	WARREN WHEELER;	08/14/1905	IRR_SW	1.920	135	031N-105W-04-SWSW	9987	CR CC30/133
P1469.0E	ENLARGED MERRICK DITCH	BERTHA OLSON;	10/18/1905	IRR_SW	0.510	36	031N-106W-09-NENE	8375	CR CC26/300
P1473.0E	ENLARGED BANES NO. 1 DITCH	WILLIAM BANES;	11/11/1905	IRR_SW	0.570	40	031N-106W-05-SWSW	8376	CR CC26/388
P7356.0D	EAST FORK DITCH	HANNAH JENSEN;	07/23/1906	IRR_SW	1.140	80	031N-106W-10-SWNE	19203	CR CC45/210
P7356.0D	EAST FORK DITCH	METINUS JENSEN;	07/23/1906	IRR_SW	1.110	78	031N-106W-10-SWNE	19204	CR CC45/211
P7356.0D	EAST FORK DITCH	MRS. P. CARROLL;	07/23/1906	IRR_SW	2.280	160	031N-106W-10-SWNE	17226	CR CC42/388
P7356.0D	EAST FORK DITCH	JOHN POTOCHNICK;	07/23/1906	IRR_SW	1.570	110	031N-106W-10-SWNE	17226	CR CC42/389
P7356.0D	EAST FORK DITCH	Mrs ANTON ZUPEUC;	07/23/1906	IRR_SW	1.710	120	031N-106W-10-SWNE	17226	CR CC42/390
P7356.0D	EAST FORK DITCH	MRS. ANTON ZUPEUC;	07/23/1906	IRR_SW	1.710	120	031N-106W-10-SWNE	17226	CR CC42/391
P7356.0D	EAST FORK DITCH	J. HAWKINS;	07/23/1906	IRR_SW	2.260	158	031N-106W-10-SWNE	17226	CR CC42/392
P7356.0D	EAST FORK DITCH	ESTATE OF JOHN LEBAR;	07/23/1906	IRR_SW	1.140	80	031N-106W-10-SWNE	17226	CR CC42/393
P7356.0D	EAST FORK DITCH	REV. A. SCHIFFRER;	07/23/1906	IRR_SW	0.570	40	031N-106W-10-SWNE	17226	CR CC42/394

Permit No.	Facility Name	Appropriator	Priority	Use	C.F.S/AF	Acres	HG LOC	Proof No.	CR No.
P7356.0D	EAST FORK DITCH	FRANK GOSAR;	07/23/1906	IRR_SW	0.570	40	031N-106W-10-SWNE	17226	CR CC42/395
P7356.0D	EAST FORK DITCH	J. BERTONCELJ;	07/23/1906	IRR_SW	0.570	40	031N-106W-10-SWNE	17226	CR CC42/396
P1617.0E	ENLARGED OVERLAND DITCH	JAMES MUIR;	09/03/1906	IRR_SW	2.570	180	031N-106W-12-NWSW	15225	CR CC39/265
P1617.0E	ENLARGED OVERLAND DITCH	HANNAH TAYLOR MUIR;	09/03/1906	IRR_SW	4.280	300	031N-106W-12-NWSW	15226	CR CC39/266
P1617.0E	ENLARGED OVERLAND DITCH	EVERETT JAYHUE RICHIE;	09/03/1906	IRR_SW	3.430	240	031N-106W-12-NWSW	15227	CR CC39/267
P1617.0E	ENLARGED OVERLAND DITCH	JOHN BOULTER;	09/03/1906	IRR_SW	2.290	160	031N-106W-12-NWSW	14652	CR CC38/298
P1617.0E	ENLARGED OVERLAND DITCH	ELIZABETH BOULTER;	09/03/1906	IRR_SW	4.500	315	031N-106W-12-NWSW	14653	CR CC38/299
P1617.0E	ENLARGED OVERLAND DITCH	A. HINCKLEY;	09/03/1906	IRR_SW	4.140	289.89	031N-106W-12-NWSW	14654	CR CC38/300
P1622.0E	ENLARGED BOULTER NO. 2 DITCH	RAY BOULTER;	10/05/1906	IRR_SW	4.540	318	031N-106W-12-NWSW	12671	CR CC35/395
P1916.0E	ENLARGED TIBBALS DITCH	THOMAS TIBBALS;	06/18/1908	IRR_SW	0.400	28	031N-106W-04-SESW	9347	CR CC29/009
P2173.0E	ENLARGED ROCKY MOUNTAIN DITCH	SAMUEL ALLEN;	08/20/1909	IRR_SW	2.740	192	031N-106W-10-SWNW	14655	CR CC38/301
P2606.0E	ENLARGED TANGLEFOOT DITCH	MARY JENSEN;	02/24/1910	IRR_SW	2.010	141	031N-106W-09-NENE	15228	CR CC39/268
P2303.0E	ENLARGED BANES NO. 1 DITCH	C F MATHIS;	08/25/1910	IRR_SW	5.000	350	031N-106W-05-SWSW	12672	CR CC35/396
P2397.0E	ENLARGED EAST FORK CANAL	JERRY BERTONCELJ;	01/21/1911	IRR_SW	0.490	34	031N-106W-10-SWNE	21411	CR CC52/134
P2397.0E	ENLARGED EAST FORK CANAL	GARY G AND ROXANNA M JENSEN;	01/21/1911	IRR_SW	0.710	50	031N-106W-10-SWNE	35914	CR CC78/344
P3127.0E	ENLARGED HOFF NO. 1 DITCH ACIPT PERRY DITCH	MARSCEL TRONQUET;	03/03/1915	IRR_SW	2.530	177.53	032N-107W-07-SESE	19926	CR CC46/376
P3848.0E	ENLARGED TANGLEFOOT DITCH	MARY JENSEN;	01/04/1918	IRR_SW	2.280	160	031N-106W-09-NENE	19481	CR CC45/527
P4285.0E	ENLARGED JORGENSEN DITCH	NATIONAL LIVE STOCK CO.;	10/29/1921	IRR_SW	2.230	156	031N-106W-09-NENE	17698	CR CC43/147
P19050.0D	MITCHELL DITCH	FINIS MITCHELL;	09/12/1938	IRR_SW	0.190	13	032N-108W-26-NESW	24269	CR CC61/332
P5906.0E	ENLARGED STEELE NO. ONE DITCH	HANNAH STEELE;	08/23/1957	IRR_SW	0.080	5.9	032N-107W-08-SESE	26795	CR CC66/069
P5906.0E	ENLARGED STEELE NO. ONE DITCH	IRENE STEELE;	08/23/1957	IRR_SW	0.220	15.8	032N-107W-08-SESE	26796	CR CC66/070
P5906.0E	ENLARGED STEELE NO. ONE DITCH	RALPH ALLEN AND IRENE STEELE;	08/23/1957	IRR_SW	0.210	15.1	032N-107W-08-SESE	26797	CR CC66/071
P10736.0R	KIRK RESERVOIR	JERRY KIRK;	03/13/1998	FIS, WL	7.920AF	0	032N-107W-22-SWNE	38597	CR CR16/183
P7288.0E	ENLARGED OVERLAND DITCH	EB S, NORMAN H AND JEPTHA E RICHIE;	02/04/1999	IRR_SW	0.920	64.1	031N-106W-12-NWSW	38568	CR CC83/128
P11379.0R	AMY RESERVOIR	S. ROBERT LEAVER FAMILY, LP;	02/27/2003	FIS	6.680AF	0	032N-108W-24-NESE	40002	CR CR18/204
P11380.0R	DOC BOB RESERVOIR	S. ROBERT LEAVER FAMILY, LP;	02/27/2003	FIS	3.960AF	0	032N-108W-24-SESE	40003	CR CR18/205
P11381.0R	JACOB ELLIET RESERVOIR	S. ROBERT LEAVER FAMILY, LP;	02/27/2003	FIS	3.920AF	0	032N-108W-24-NESE	40004	CR CR18/206
P11382.0R	MARY JANE RESERVOIR	S. ROBERT LEAVER FAMILY, LP;	02/27/2003	FIS	1.830AF	0	032N-108W-24-SESE	40005	CR CR18/207
P11383.0R	TODD RESERVOIR	S. ROBERT LEAVER FAMILY, LP;	02/27/2003	FIS	12.400AF	0	032N-108W-24-SESE	40006	CR CR18/208
P11384.0R	TREVOR RESERVOIR	S. ROBERT LEAVER FAMILY, LP;	02/27/2003	FIS	12.720AF	0	032N-108W-24-NESE	40007	CR CR18/209
	SPRING BRANCH, TRIBUTARIES OF EAST FORK NEW FORK RIVER, NEW FORK RIVER, GREEN RIVER								
P6989.0R	EAST FORK ROD AND GUN CLUB RESERVOIR	EAST FORK ROD AND GUN CLUB;	01/17/1968	REC, STO	74.300AF	0	032N-108W-25-NENW	29595	CR CR05/508
	CRAWLER DRAW, TRIBUTARIES OF EAST FORK NEW FORK RIVER, NEW FORK RIVER, GREEN RIVER								
P7910.0S	BAILEY NO 216 STOCK RESERVOIR	U.S. DEPT. OF THE INT., BUREAU OF LAND MANAGEMENT;	09/03/1975	STO	1.060AF	0	031N-108W-11-NENE	31644	CR CR08/096
	EAST FORK DRAW NO. 3, TRIBUTARIES OF CRAWLER DRAW, EAST FORK NEW FORK RIVER, NEW FORK RIVER, GREEN RIVER								
P7899.0S	EAST FORK NO 3 STOCK RESERVOIR	U.S. DEPT. OF THE INT., BUREAU OF LAND MANAGEMENT;	09/03/1974	STO	3.000AF	0	031N-108W-01-SWSW	31645	CR CR08/097
	EAST FORK DRAW NO. 5, TRIBUTARIES OF EAST FORK NEW FORK RIVER, NEW FORK RIVER, GREEN RIVER								
P7897.0S	EAST FORK NO 5 STOCK RESERVOIR	U.S. DEPT. OF THE INT., BUREAU OF LAND MANAGEMENT;	09/03/1974	STO	2.000AF	0	031N-108W-01-SENW	31646	CR CR08/098
	EAST FORK DRAW NO. 4, TRIBUTARIES OF EAST FORK DRAW NO. 5, EAST FORK NEW FORK RIVER, NEW FORK RIVER, GREEN RIVER								
P7900.0S	EAST FORT NO 4 STOCK RESERVOIR	U.S. DEPT. OF THE INT., BUREAU OF LAND MANAGEMENT;	09/03/1974	STO	3.000AF	0	031N-108W-01-SWNW	31647	CR CR08/099

Permit No.	Facility Name	Appropriator	Priority	Use	C.F.S/AF	Acres	HG LOC	Proof No	CR No.
	EAST FORK DRAW NO. 6, TRIBUTARIES OF EAST FORK NEW FORK RIVER, NEW FORK RIVER, GREEN RIVER								
P7898.0S	EAST FORK NO 6 STOCK RESERVOIR	U.S. DEPT. OF THE INT., BUREAU OF LAND MANAGEMENT;	09/03/1974	STO	2.000AF	0	032N-108W-36-SWSE	31648	CR CR08/100
	SPRING NO. 1 AREA, TRIBUTARIES OF EAST FORK NEW FORK RIVER, NEW FORK RIVER, GREEN RIVER								
P9243.0R	BOULDER REARING STATION NO. 1 RESERVOIR	WYOMING GAME AND FISH DEPARTMENT;	01/17/1986	FIS	6.920AF	0	032N-108W-26-SENW	34727	CR CR11/460
P29621.0D	BOULDER REARING STATION SPRING NO. 1 COLLECTION SYSTEM	WYOMING GAME AND FISH DEPARTMENT;	01/17/1986	FIS, RES	0.000	0	032N-108W-26-SENW	34660	CR CC76/215
	BALL NO. 1 SPRINGS, TRIBUTARIES OF EAST FORK NEW FORK RIVER, NEW FORK RIVER, GREEN RIVER								
P5206.0R	BALL FISH POND NO. 1 RESERVOIR	WYOMING GAME AND FISH DEPARTMENT;	01/16/1940	FIS	2.610AF	0	032N-108W-26-SWNE	34726	CR CR11/459
	SPRING NO. 2 AREA, TRIBUTARIES OF EAST FORK NEW FORK RIVER, NEW FORK RIVER, GREEN RIVER								
P9244.0R	BOULDER REARING STATION NO. 2 RESERVOIR	WYOMING GAME AND FISH DEPARTMENT;	01/17/1986	FIS	8.410AF	0	032N-108W-26-SENE	34728	CR CR11/461
	TURK DRAW, TRIBUTARIES OF BURTS SPRING DRAW, EAST FORK NEW FORK RIVER, NEW FORK RIVER, GREEN RIVER								
P7698.0S	BOULDER LAKE NO 20 STOCK RESERVOIR	U.S. DEPARTMENT OF THE INTERIOR, ;	04/16/1974	STO	3.000AF	0	032N-107W-05-SESW	31471	CR CR07/504
	UPPER DRAW, TRIBUTARIES OF BURTS SPRING DRAW, EAST FORK NEW FORK RIVER, NEW FORK RIVER, GREEN RIVER								
P7913.0S	UPPER BOULDER NO 305 STOCK RESERVOIR	U.S. DARPARTMENT OF THE INTERIOR, ;	09/03/1974	STO	2.000AF	0	033N-107W-34-SWNW	31649	CR CR08/101
	SPRING NO. 1, TRIBUTARIES OF EAST FORK NEW FORK RIVER, NEW FORK RIVER, GREEN RIVER								
P10705.0D	STEELE NO. 3 DITCH	ED. STEELE;	04/01/1911	IRR_SW	0.050	3.4	032N-107W-16-NWNW	13204	CR CC36/405
	SPRING NO. 2, TRIBUTARIES OF EAST FORK NEW FORK RIVER, NEW FORK RIVER, GREEN RIVER								
P10706.0D	STEELE NO. 4 DITCH	ED. STEELE;	04/01/1911	IRR_SW	0.000	3.4	032N-107W-09-SWSW	13205	CR CC36/406
	SILVER CREEK, TRIBUTARIES OF EAST FORK NEW FORK RIVER, NEW FORK RIVER, GREEN RIVER								
P2182.0D	WEISS DITCH	FREDERICK ERHARD WEISS;	06/22/1899	IRR_SW	3.270	229	032N-107W-14-SENE	6678	CR CC20/028
P2686.0D	MALONEKS DITCH	WILLIAM ROBERT MALONEK;	03/01/1900	IRR_SW	1.710	120	032N-106W-17-SENE	6679	CR CC20/029
P7203.0D	MEYERS DITCH ACT WEISS DITCH	CELIA MEYERS;	04/01/1905	IRR_SW	4.480	314	032N-107W-14-SENE	7788	CR CC25/102
P7453.0D	SILVER DITCH	GEORGE LOVATT;	10/08/1906	IRR_SW	2.280 ORI SUP	100 60	032N-107W-13-NESW	8386	CR CC26/396
P8111.0D	KING NO. 2 DITCH	RICHARD KING;	12/12/1907	IRR_SW	3.740	262.06	032N-107W-24-NENE	13206	CR CC36/407
P8111.0D	KING NO. 2 DITCH	THOMAS KING;	12/12/1907	IRR_SW	2.010	140.49	032N-107W-24-NENE	13207	CR CC36/408
P8111.0D	KING NO. 2 DITCH	JAMES KING;	12/12/1907	IRR_SW	4.000	280	032N-107W-24-NENE	13208	CR CC36/409
P8111.0D	KING NO. 2 DITCH	FRANK COOMS;	12/12/1907	IRR_SW	4.350	305	032N-107W-24-NENE	13209	CR CC36/410
P8111.0D	KING NO. 2 DITCH	THOMAS KING;	12/12/1907	IRR_SW	2.280	160	032N-107W-24-NENE	20119	CR CC47/045
P8909.0D	STARK DITCH	SAMUEL STARK;	11/06/1908	IRR_SW	0.860	60	032N-107W-14-SENE	15230	CR CC39/270

Permit No.	Facility Name	Appropriator	Priority	Use	C F.S/AF	Acres	HG LOC	Proof No.	CR No
P1990.0E	ENLARGED WEISS DITCH	SAMUEL STARK;	11/06/1908	IRR_SW	1.290	90	032N-107W-14-SENE	15231	CR CC39/271
P14262.0D	JAYCOX NO. 1 DITCH	GUY JAYCOX;	08/02/1916	IRR_SW	1.800	126.4	032N-106W-18-SWSW	17225	CR CC42/387
P14262.0D	JAYCOX NO. 1 DITCH	SAMUEL MEYERS;	08/02/1916	IRR_SW	2.060	144	032N-106W-18-SWSW	17423	CR CC42/594
P14687.0D	BERT LOVATT DITCH	ALBERT LOVATT;	04/13/1917	IRR_SW	0.770	54	032N-107W-14-NWNW	17697	CR CC43/146
P3970.0R	SILVER LAKE RESERVOIR	SILVER LAKE RESERVOIR COMPANY;	11/19/1924	IRR_SW	1219.110AF	0	033N-105W-34-NWNW	24263	CR CR01/374
P17033.0D	M. NELSON DITCH ACIPT JAYCOX NO. 1 DITCH	MARY NELSON;	12/05/1925	IRR_SW	1.470	103	032N-106W-18-NWSE	21107	CR CC49/412
P19987.0D	HIGHWATER CROSSING DITCH	MILFORD STEELE; STATE BOARD OF LAND COMMISSIONERS;	01/26/1945	IRR_SW	0.560	34.87	032N-107W-10-SESW	24270	CR CC61/333
P5769.0R	ENLARGED SILVER LAKE RESERVOIR	SILVER LAKE IRRIGATION DISTRICT;	11/20/1950	IRR_SW, STO	932.520AF	0	033N-105W-34-NWNW	25312	CR CR02/030
	SPRING CREEK, TRIBUTARIES OF SILVER CREEK, EAST FORK NEW FORK RIVER, NEW FORK RIVER, GREEN RIVER								
P1235.0E	ENLARGED ELK DITCH	GEROGE LOVATT;	05/27/1904	IRR_SW	0.850	60	032N-107W-03-NENE	6680	CR CC20/030
P7564.0D	TAYLOR DITCH	BERT TAYLOR;	12/06/1906	IRR_SW	1.320	93	033N-107W-26-NESE	9965	CR CC30/125
P5649.0R	PENNOCK FISH POND NUMBER ONE RESERVOIR	MOUNTAIN SPRINGS RANCH, INC.;	01/29/1948	FIS	10.610AF	0	033N-107W-23-SWSE	34193	CR CR11/053
P5650.0R	PENNOCK FISH POND NUMBER TWO RESERVOIR	MOUNTAIN SPRINGS RANCH, INC.;	01/29/1948	FIS	3.330AF	0	033N-107W-23-SESE	34194	CR CR11/054
P9065.0R	MOUNTAIN SPRINGS NO. 2 RESERVOIR	MOUNTAIN SPRINGS RANCH;	09/11/1984	FIS	1.610AF	0	033N-107W-26-NENE	33988	CR CR10/389
P9066.0R	MOUNTAIN SPRINGS NO. 3 RESERVOIR	MOUNTAIN SPRINGS RANCH;	09/11/1984	FIS	2.550AF	0	033N-107W-26-NENE	33989	CR CR10/390
	LOVATT CREEK, TRIBUTARIES OF SPRING CREEK, SILVER CREEK, EAST FORK NEW FORK RIVER, NEW FORK RIVER, GREEN RIVER								
P3521.0D	LOVATT DITCH	JOSIAH LOVATT;	11/05/1901	IRR_SW	0.850	60	032N-107W-02-SENW	6681	CR CC20/031
P14239.0D	ELK DITCH	GEORGE LOVATT;	05/19/1916	IRR_SW	0.000	60	032N-107W-02-NESW	15232	CR CC39/272
P12834.0R	BEAVER HUT POND RESERVOIR	BLATTLAND INVESTMENTS, LLC;	01/19/2001	WL	3.720AF	0	033N-106W-31-NWSW	40241	CR CR19/032
P12835.0R	ROAD CROSSING RESERVOIR	BLATTLAND INVESTMENTS, L.L.C.;	01/19/2001	WL	0.590AF	0	033N-106W-31-SWSW	40409	CR CR19/115
	FIELD CREEK, TRIBUTARIES OF LOVATT CREEK, SPRING CREEK, SILVER CREEK, EAST FORK NEW FORK RIVER, NEW FORK RIVER, GREEN RIVER								
P10949.0R	SEDGE RESERVOIR	JOHN BLATT;	01/06/1999	FIS	3.270AF	0	033N-107W-36-SESE	38686	CR CR16/225
	SCAB CREEK, TRIBUTARIES OF SPRING CREEK, SILVER CREEK, EAST FORK NEW FORK RIVER, NEW FORK RIVER, GREEN RIVER								
P7607.0D	WOLF DITCH	J. LOVATT;	12/26/1905	IRR_SW	2.520	177	033N-107W-36-SENW	10860	CR CC32/014
P7608.0D	SUPPLY DITCH	J. LOVATT;	12/22/1906	IRR_SW	1.060	74.5	033N-107W-36-SWNE	10861	CR CC32/015
P10408.0D	MCQUILLAN DITCH	THOMAS MCQUILLAN;	01/09/1911	IRR_SW	1.260	88.5	033N-107W-36-SWNE	13210	CR CC36/411
	ASPEN CREEK, TRIBUTARIES OF SPRING CREEK, SILVER CREEK, EAST FORK NEW FORK RIVER, NEW FORK RIVER, GREEN RIVER								
P9064.0R	MOUNTAIN SPRINGS NO. 1 RESERVOIR	OTTO, TOMMY AND TERRY MEIER;	09/11/1984	FIS	0.770AF	0	033N-107W-23-NWSE	33987	CR CR10/388
	HIGH GROSS CREEK, TRIBUTARIES OF EAST FORK NEW FORK RIVER, NEW FORK RIVER, GREEN RIVER								
P9709.0R	HIGH GROSS RESERVOIR	DAVID ORDWAY;	04/22/1991	FIS, WL	8.680AF	0	032N-107W-22-NWSE	36957	CR CR14/173
	BOULTER CREEK, TRIBUTARIES OF EAST FORK NEW FORK RIVER, NEW FORK RIVER, GREEN RIVER								
P6310.0R	BOULTER RESERVOIR	EAST FORK RESERVOIR ASSOCIATION;	07/24/1934	DOM_SW, IRR_SW, OTH, STO	563.000AF	0	032N-105W-24-NWSE	26108	CR CR02/194

Permit No.	Facility Name	Appropriator	Priority	Use	C.F.S/AF	Acres	HG LOC	Proof No.	CR No
	COTTONWOOD CREEK, TRIBUTARIES OF EAST FORK NEW FORK RIVER, NEW FORK RIVER, GREEN RIVER								
P3514.0D	KERWIN NO. 2 DITCH	FRANCIS KERWIN;	10/31/1901	IRR_SW	0.850	60	032N-107W-25-SWSW	6675	CR CC20/026
P9480.0D	ROSEWALD DITCH	OLAF ROSEWALD;	11/26/1909	IRR_SW	2.060	144	032N-107W-36-NENW	12205	CR CC34/396
P10656.0D	ROY DITCH	ROY MATHIS;	06/23/1911	IRR_SW	0.370	26	032N-107W-36-NENW	12673	CR CC35/397
P10655.0D	MATHIS DITCH	C. MATHIS;	06/23/1911	IRR_SW	2.280	160	032N-107W-36-NENW	12674	CR CC35/398
P15912.0D	BERNICE DITCH	ROY MATHIS;	09/11/1920	IRR_SW	1.290	90.6	032N-106W-29-SENW	19205	CR CC45/212
P16805.0D	HITTLE DITCH	HENRY HITTLE;	01/06/1921	IRR_SW	1.260	88	032N-107W-26-NESW	19855	CR CC46/315
P16805.0D	HITTLE DITCH	HENRY HITTLE;	01/06/1921	IRR_SW	0.000	40	032N-107W-26-NESW	19856	CR CC46/316
P16110.0D	NELSON NO. 1 DITCH	NATIONAL LIVE STOCK CO.;	06/07/1921	IRR_SW	0.570	40	032N-106W-31-NWNE	17701	CR CC43/150
P16111.0D	NELSON NO. 2 DITCH	NATIONAL LIVE STOCK CO.;	06/07/1921	IRR_SW	0.710	50	032N-107W-36-SENE	17702	CR CC43/151
P16208.0D	NELSON NO. 4 DITCH	NATIONAL LIVE STOCK CO.;	08/24/1921	IRR_SW	0.000	160	032N-106W-31-SENW	17700	CR CC43/149
P5928.0E	ENLARGED BERNICE DITCH	ELLEN RICHIE & SONS;	05/24/1957	IRR_SW	1.060	74	032N-106W-29-SENW	26573	CR CC65/411
	POCKET CREEK, TRIBUTARIES OF COTTONWOOD CREEK, EAST FORK NEW FORK RIVER, NEW FORK RIVER, GREEN RIVER								
P1850.0D	POCKET CREEK DITCH	ELI MORRIS;	06/06/1898	IRR_SW	0.380	27	031N-106W-03-NWNE	6676	CR CC26/153
P3513.0D	KERWIN NO. ONE DITCH	FRANCIS KERWIN;	10/31/1901	IRR_SW	0.420	30	032N-107W-36-NWNW	6677	CR CC20/027
P11912.0D	JOMEN NO. 2 DITCH	KNUTE JOMEN;	07/03/1913	IRR_SW	1.010	71	031N-106W-03-NENW	15229	CR CC39/269
P16112.0D	NELSON NO. 3 DITCH	NATIONAL LIVE STOCK CO.;	06/07/1921	IRR_SW	0.430	30	032N-107W-36-SENW	17699	CR CC43/148
P3925.0R	J-J RESERVOIR NO. 3	BOUSMAN LIVESTOCK, INC.;	09/05/1923	DOM_SW, IRR_SW	63.460AF	0	032N-106W-25-NENW	32150	CR CR08/436
	NELSON CREEK, TRIBUTARIES OF COTTONWOOD CREEK, EAST FORK NEW FORK RIVER, NEW FORK RIVER, GREEN RIVER								
P16209.0D	NELSON NO. 4 DITCH	NATIONAL LIVE STOCK CO.;	08/24/1921	IRR_SW	2.280	160	032N-107W-36-SENE	17703	CR CC43/152
	SPRING, TRIBUTARIES OF COTTONWOOD CREEK, EAST FORK NEW FORK RIVER, NEW FORK RIVER, GREEN RIVER								
P17217.0D	GRANITE DITCH	ROBERT BANES;	03/30/1927	IRR_SW	0.100	7	032N-106W-28-SENW	22155	CR CC56/379
P21879.0D	ELLEN DITCH	ELLEN RICHIE & SONS;	05/24/1957	IRR_SW	0.040	3	032N-106W-28-NWNE	26574	CR CC65/412
	MUDDY CREEK, TRIBUTARIES OF EAST FORK NEW FORK RIVER, NEW FORK RIVER, GREEN RIVER								
P1084.0D	HAAS NO. 1 DITCH	S. JOHNSON;	11/04/1895	IRR_SW	0.720	50	031N-105W-29-SWSE	4243	CR CB03/092
P1083.0D	JOHNSON NO. 1 DITCH	SWAN JOHNSON;	11/04/1895	IRR_SW	0.850	60	031N-105W-28-SENW	4242	CR CA03/092
P1088.0D	JOHNSON NO. 2 DITCH	SWAN JOHNSON;	11/26/1895	IRR_SW	0.280	20	031N-105W-28-SWNW	4244	CR CA03/093
P1089.0D	HAAS NO. 2 DITCH	S. JOHNSON;	11/26/1895	IRR_SW	0.570	40	031N-105W-29-SWSE	4245	CR CB03/093
P2644.0D	BOULTER DITCH ACIPT NICHOLS PIPELINE	J M BOULTER;	06/04/1900	IRR_SW	4.950	348	031N-106W-27-NWNE	5513	CR CC07/024
P765.0E	ENLARGED JOHNSON NO. 1 DITCH	HEIRS OF SWAN JOHNSON;	12/28/1901	IRR_SW	0.420	30	031N-105W-28-SENW	9003	CR CC27/303
P9221.0D	HANDE NO. 1 DITCH	OLE HANDE;	06/28/1909	IRR_SW	0.530	37	031N-106W-29-NESW	12203	CR CC34/394
P9222.0D	HANDE NO. 2 DITCH	OLE HANDE;	06/28/1909	IRR_SW	0.900	63	031N-106W-32-NENE	12204	CR CC34/395
P9895.0D	MUDDY DITCH	SAMUEL MEYERS;	05/26/1910	IRR_SW	0.610	43	031N-107W-24-NENE	11229	CR CC32/397
P10929.0D	HANDE NO. 3 DITCH	OLE HANDE;	07/06/1911	IRR_SW	2.280	160	031N-106W-33-NWNE	13620	CR CC36/824
P14450.0D	ZEMBO NO. 2 DITCH	PAUL ZEMBO;	05/31/1916	IRR_SW	0.240	17	031N-106W-32-NENE	17687	CR CC43/136
P15913.0D	SWAINBANK DITCH	CHRISTOPHER ALLEN;	11/26/1920	IRR_SW	0.670	47	031N-105W-27-SWNW	18444	CR CC44/188
P15914.0D	STUMP DITCH	CHRISTOPHER ALLEN;	11/26/1920	IRR_SW	0.160	11	031N-105W-28-SWNE	18445	CR CC44/189
P18452.0D	METINUS DITCH	METINUS JENSEN;	09/23/1932	IRR_SW	0.000	69.6	031N-106W-19-SESE	21926	CR CC56/189
P22625.0D	OTTO DITCH	OTTO F. AND FLORENCE L. JENSEN;	03/18/1965	IRR_SW	0.440	31	031N-107W-13-SESE	27905	CR CC67/318
P6142.0E	ENLARGED BOULTER DITCH ACIPT NICHOLS PIPELINE	OTTO F AND FLORENCE L JENSEN;	03/18/1965	IRR_SW	1.130	79	031N-106W-27-NWNE	31945	CR CC72/419
P14870.0S	MUD STOCK RESERVOIR	RICHARD SMITH;	09/04/2001	STO	0.480AF	0	031N-106W-25-SESW		CR CR17/173
P32708.0D	JONES SPRINKLER IRRIGATION SYSTEM	MARK A. JONES LIVING TRUST, ET AL.;	07/26/2002	IRR_SW	3.080	215.3	031N-107W-13-SWSE	39982	CR CC88/042
P34111.0D	SUBLETTE COUNTY NO. 8 MUDDY CREEK PUMP	BOARD OF SUBLETTE COUNTY COMMISSIONERS;	02/17/2009	FIR, IND_SW	2.780	0	031N-106W-32-NWNE	41369	CR CC94/040

Permit No.	Facility Name	Appropriator	Priority	Use	C.F.S/AF	Acres	HG LOC	Proof No.	CR No
	LITTLE MUDDY CREEK, TRIBUTARIES OF MUDDY CREEK, EAST FORK NEW FORK RIVER, NEW FORK RIVER, GREEN RIVER								
P14451.0D	ZEMBO NO. 1 DITCH	PAUL ZEMBO;	05/31/1916	IRR_SW	0.140	10	031N-106W-32-SENE	17688	CR CC43/137
P16228.0D	ANGELO DITCH	YERNEY BERTONOELJ;	09/02/1921	IRR_SW	0.100	7	031N-106W-32-SENE	18638	CR CC44/409
P14797.0S	CUTOFF STOCK RESERVOIR	RICHARD SMITH;	07/12/2000	STO	0.330AF	0	031N-106W-32-SESE		CR CR17/174
	BROWN'S DRAW, TRIBUTARIES OF LITTLE MUDDY CREEK, MUDDY CREEK, EAST FORK NEW FORK RIVER, NEW FORK RIVER, GREEN RIVER								
P4427.0R	BOULTER RESERVOIR	JOHN BOULTER;	09/12/1930	STO	4.120AF	0	031N-105W-32-NWSE	20321	CR CR01/038
P17821.0D	BOULTER SUPPLY DITCH	JOHN BOULTER;	12/16/1930	RES, STO	1.000	0	031N-105W-33-SESW	20312	CR CC47/245
	JERRY SPRING, TRIBUTARIES OF LITTLE MUDDY CREEK, MUDDY CREEK, EAST FORK NEW FORK RIVER, NEW FORK RIVER, GREEN RIVER								
P16229.0D	VENCEL DITCH	YERNEY BERTONCELJ;	09/02/1921	IRR_SW	0.260	18	031N-106W-32-NESE	18639	CR CC44/410
	RITCHIE SPRINGS, TRIBUTARIES OF MUDDY CREEK, EAST FORK NEW FORK RIVER, NEW FORK RIVER, GREEN RIVER								
P16479.0D	RICHIE PIPE LINE	EVERTT RICHIE;	11/10/1922	STKNDMS	0.100	0	031N-105W-20-SWNW	19482	CR CC45/528
	WELLER CREEK, TRIBUTARIES OF EAST FORK NEW FORK RIVER, NEW FORK RIVER, GREEN RIVER								
P5566.0D	WELLER DITCH	WARREN WHEELER;	08/11/1903	IRR_SW	1.920	135	031N-105W-05-NWSE	7789	CR CC25/103
	WEST FORK NEW FORK RIVER, TRIBUTARIES OF NEW FORK RIVER, GREEN RIVER								
T5475.0-	EAST CHANNEL DITCH	C. HELEN FISHER;	06/30/1889	IRR_SW			035N-110W-34-SWNE	5475	CR CC06/088
P1281.0D	WEST FORK IRRIGATION DITCH	H. JOHNSON;	07/03/1896	IRR_SW	2.830	198	035N-110W-28-SWNE	4195	CR CB03/068
P1281.0D	WEST FORK IRRIGATION DITCH ACT ALEXANDER DITCH	JAS WESTFALL;	07/03/1896	IRR_SW	4.000	280	035N-110W-34-NESW	4197	CR CB03/069
P1281.0D	WEST FORK IRRIGATION DITCH ACT ALEXANDER DITCH	MINERVA WESTFALL;	07/03/1896	IRR_SW	3.400	240	035N-110W-34-NESW	4196	CR CA03/069
P1281.0D	WEST FORK IRRIGATION DITCH ACIPT HARRY RAHM DITCH	J. N. STRONG;	07/03/1896	IRR_SW	2.500	175	035N-110W-34-NESW	4198	CR CA03/070
P1487.0D	BEE LINE DITCH	S. HOFF;	05/10/1897	IRR_SW	2.250	158	034N-110W-13-SENW	4200	CR CA03/071
P1487.0D	BEE LINE DITCH	E. STEELE;	05/10/1897	IRR_SW	2.220	155.4	034N-110W-13-SENW	4202	CR CA03/072
P1487.0D	BEE LINE DITCH	EMMA STEELE;	05/10/1897	IRR_SW	3.970	278	034N-110W-13-SENW	4199	CR CB03/070
P1487.0D	BEE LINE DITCH	HARRY HOFF;	05/10/1897	IRR_SW	1.660	116	034N-110W-13-SENW	4201	CR CB03/071
P1482.0D	YAMPA DITCH	PAULINE NOBLE;	05/14/1897	IRR_SW	2.570	180	034N-110W-11-NWNW	4203	CR CB03/072
P1481.0D	DUCK CREEK DITCH	MINERVA J. WESTFALL;	05/14/1897	IRR_SW	0.420	33	035N-110W-34-SWSW	4203	CR CA03/073
P1518.0D	LONE PINE DITCH ACIPT JENKINS DITCH	NANCY ALEXANDER;	06/28/1897	IRR_SW	4.290	300	036N-110W-29-SESW	4205	CR CA03/074
P1519.0D	PINE GROVE DITCH	EUGENE ALEXANDER;	06/28/1897	IRR_SW	1.330	93.17	036N-110W-20-NWSE	4204	CR CB03/073
P1844.0D	WRIGHT DITCH ACIPT STRONG NO. 2 DITCH	WILLARD WRIGHT;	05/27/1898	IRR_SW	3.920	275	035N-110W-16-NWSW	6682	CR CC20/032
P1849.0D	SILL DITCH	ELLA SILL;	06/02/1898	IRR_SW	3.870	271	033N-109W-09-SWNW	4206	CR CB03/074
P1849.0D	SILL DITCH	O. SILL;	06/02/1898	IRR_SW	4.080	289	033N-109W-09-SWNW	4207	CR CA03/075
P1917.0D	BAIR DITCH	ED EDWARDS;	07/28/1898	IRR_SW	1.670	116.6	034N-109W-30-NWSE		CR CC46/210
P1917.0D	BAIR DITCH	ED EDWARDS;	07/28/1898	IRR_SW	2.280	160	034N-109W-30-NWSE	22891	CR CC58/149
P1928.0D	BELKNAP AND NOBLE DITCH ACIPT CONVERSE DITCH	BELKNAP AND NOBLE;	08/09/1898	IRR_SW	12.030	842	034N-110W-11-NWNW	4209	CR CA03/076
P1980.0D	GENOA DITCH	W. WRIGHT; P. W. JENKINS;	10/12/1898	IRR_SW	2.120	147	035N-110W-08-SESE	4210	CR CB03/076
P2041.0D	STRONG DITCH	J. N. STRONG;	01/28/1899	IRR_SW	1.100	77	035N-110W-34-SWNW	4211	CR CA03/077
P425.0E	ENLARGED BEE LINE DITCH	NETTIE HOFF;	05/15/1899	IRR_SW	4.560	320	034N-110W-13-SENW	4213	CR CA03/078
P2113.0D	HOFF DITCH	H. HOFF;	05/15/1899	IRR_SW	0.280	20	034N-109W-19-SESW	4212	CR CB03/077
P425.0E	ENLARGED BEE LINE DITCH	E. MILLER;	05/15/1899	IRR_SW	3.940	276	034N-110W-13-SENW	4214	CR CB03/078
P424.0E	ENLARGED WRIGHT DITCH	MALVERY WRIGHT;	05/15/1899	IRR_SW	4.350	305	035N-110W-16-NWSW	6683	CR CC20/033

Permit No.	Facility Name	Appropriator	Priority	Use	C.F.S/AF	Acres	HG LOC	Proof No.	CR No
P2192.0D	BOYCE DITCH	FRED BOYCE;	07/06/1899	IRR_SW	1.930	135	034N-109W-30-NWSE	4215	CR CA03/079
P2175.0D	ULRICA DITCH ACIPT HARRY RAHM DITCH	JOHN RAHM;	07/13/1899	IRR_SW	4.570	320	035N-110W-28-SWNE	6684	CR CC20/034
P2700.0D	BALLOU DITCH	FRED BALLOU;	07/05/1900	IRR_SW	4.500	315	034N-110W-22-NWNE	5431	CR CC06/045
P579.0E	ENLARGED YAMPA DITCH	PAULINE NOBLE;	09/05/1900	IRR_SW	1.550	110	034N-110W-11-NWNW	4231	CR CA03/478
P2899.0D	BELKNAP NO. 1 DITCH	EDWIN BELKNAP;	11/05/1900	IRR_SW	2.140	150	034N-110W-14-NENE	6686	CR CC20/035
P2898.0D	BELKNAP NO. 2 DITCH ACT CONVERSE DITCH	MARY BELKNAP;	11/05/1900	IRR_SW	4.570	320	034N-110W-03-SESE	6685	CR CC18/078
P3080.0D	NUMBER ONE DITCH	GEORGE GLOVER;	03/15/1901	IRR_SW	0.810	57	034N-110W-02-NESE	6705	CR CC20/053
P3082.0D	LUMAN NO. 2 DITCH ACT ALEXANDER DITCH ACT HARRY RAHM DITCH	ABNER LUMAN;	03/15/1901	IRR_SW	2.280	160	035N-110W-34-NESW	6706	CR CC20/054
P3081.0D	LUMAN DITCH ACT ALEXANDER DITCH ACT HARRY RAHM DITCH	JEANETTE LUMAN;	03/15/1901	IRR_SW	4.570	320	035N-110W-34-NESW	6774	CR CC20/124
P664.0E	ENLARGED WEST FORK IRRIGATION DITCH	P W JENKINS;	05/29/1901	IRR_SW	0.570	40	035N-110W-28-SWNE	9973	CR CC30/134
P3188.0D	POPE DITCH	JOHN POPE;	05/29/1901	IRR_SW	4.550	320	032N-108W-08-SWNW	5470	CR CC06/083
P3239.0D	LOUIS DITCH	JOHN VIBLE; LOUIS BRODERSON;	06/17/1901	IRR_SW	4.000	280	032N-108W-16-NESW	5471	CR CC06/084
P3239.0D	LOUIS DITCH	Mrs C. VIBLE;	06/17/1901	IRR_SW	0.070	5	032N-108W-16-NESW	17222	CR CC42/384
P699.0E	ENLARGED ULRICA DITCH	JOHN RAHM;	08/20/1901	IRR_SW	1.420	100	035N-110W-28-SWNE	6687	CR CC20/036
P3393.0D	DENSLEY-MERRITT DITCH	JOHN RAHM; SAMUEL DENSLEY;	09/06/1901	IRR_SW	0.420	30	035N-110W-21-SESW	6688	CR CC20/037
P3393.0D	DENSLEY-MERRITT DITCH	ANDREW MERRITT;	09/06/1901	IRR_SW	1.880	132	035N-110W-21-SESW	6689	CR CC20/038
P3433.0D	EDMUNSON DITCH	P. JENKINS;	09/09/1901	IRR_SW	2.140	150	035N-110W-34-NESW	9974	CR CC30/135
P708.0E	ENLARGED ULRICA DITCH	WILLIAM LOZIER;	09/16/1901	IRR_SW	4.140	290	035N-110W-28-SWNE	6690	CR CC20/039
P708.0E	ENLARGED ULRICA DITCH	ROSIE LOZIER;	09/16/1901	IRR_SW	2.280	160	035N-110W-28-SWNE	6691	CR CC20/040
P3449.0D	JOHNSON DITCH	P. JENKINS;	10/02/1901	IRR_SW	0.280	20	035N-110W-27-SWSW	9975	CR CC30/136
P3519.0D	CONVERSE DITCH	RAY S. GLOVER; A. F. LOZIER; DELOSS BAIR;	10/31/1901	IRR_SW	10.260	720	034N-110W-03-SESE	5430	CR CC06/044
P3526.0D	VERNON DITCH	WESLEY BLOOM;	11/01/1901	IRR_SW	1.070	77	033N-109W-22-NWNE	5476	CR CC06/089
P729.0E	ENLARGED SILL DITCH	ESTATE WESLEY BLOOM;	11/01/1901	IRR_SW	2.710	190	033N-109W-09-SWNW	9976	CR CC30/137
P3634.0D	PRIDDY DITCH	WILLIS PRIDDY;	12/31/1901	IRR_SW	4.010	281	032N-108W-28-SESW	6486	CR CC17/075
P4007.0D	SEABOLT EAST SIDE DITCH	WILLIAM BOWER;	06/23/1902	IRR_SW	0.120	9	032N-108W-16-NESW		CR CC27/304
P4007.0D	SEABOLT EAST SIDE DITCH	EDWARD BUCK;	06/23/1902	IRR_SW	0.070	5	032N-108W-16-NESW	9004	CR CC27/305
P4007.0D	SEABOLT EAST SIDE DITCH	JOHN SEABOLT;	06/23/1902	IRR_SW	3.220	226	032N-108W-16-NESW	9005	CR CC27/306
P3999.0D	LAST CHANCE DITCH ACT PARADISE CANAL	EDWARD BUCK;	06/23/1902	IRR_SW	1.300	91	032N-109W-01-SWNE	9006	CR CC27/307
P3999.0D	LAST CHANCE DITCH ACT PARADISE CANAL	WILLIAM SEABOLT;	06/23/1902	IRR_SW	1.710	120	032N-109W-01-SWNE	9007	CR CC27/308
P3999.0D	LAST CHANCE DITCH ACT PARADISE CANAL	WILLIAM BOWER;	06/23/1902	IRR_SW	1.320	93	032N-109W-01-SWNE	9008	CR CC27/309
P3999.0D	LAST CHANCE DITCH ACT PARADISE CANAL	DOLPHUS WOLCOTT;	06/23/1902	IRR_SW	3.640	255	032N-109W-01-SWNE	9009	CR CC27/310
P3999.0D	LAST CHANCE DITCH ACT PARADISE CANAL	THEODORE TREGONING;	06/23/1902	IRR_SW	1.750	123	032N-109W-01-SWNE	9010	CR CC27/311
P4008.0D	WILLOW DITCH	WILLIAM SEABOLT;	06/23/1902	IRR_SW	0.110	8	032N-108W-28-SESW	9011	CR CC27/312
P4008.0D	WILLOW DITCH	THEODORE TREGONING;	06/23/1902	IRR_SW	1.550	109	032N-108W-28-SESW	9012	CR CC27/313
P862.0E	ENLARGED VERNON DITCH	THOS WILKSIE;	06/28/1902	IRR_SW	2.500	175.09	033N-109W-22-NWNE	5472	CR CC06/085
P874.0E	ENLARGED DUCK CREEK DITCH	C HELEN FISHER;	07/03/1902	IRR_SW	0.500	35	035N-110W-34-SWSW	5473	CR CC06/086
P4042.0D	MCKINLEY DITCH ACT HARRY RAHM DITCH	FRED FISHER;	07/12/1902	IRR_SW	5.130	360	035N-110W-34-NESW	5477	CR CC06/090
P4042.0D	MCKINLEY DITCH ACT HARRY RAHM DITCH	C. HELEN FISHER;	07/12/1902	IRR_SW	1.140	80	035N-110W-34-NESW	6487	CR CC16/017
P4082.0D	POSTEL DITCH	WILLIAM POSTEL;	08/02/1902	IRR_SW	4.270	298.79	032N-108W-28-SESW	6668	CR CC20/019
P1059.0E	ENL. DENSLEY-MERRITT DITCH ACIPT ULRICA DITCH	P W JENKINS;	05/29/1903	IRR_SW	1.630	114.36	035N-110W-21-SESW	14050	CR CC37/437
P1140.0E	ENLARGED SILL DITCH	WESLEY BLOOM;	06/04/1903	IRR_SW	4.670	329	033N-109W-09-SWNW	5474	CR CC06/087
P5563.0D	R. B. DITCH	THOMAS BOURM;	07/06/1903	IRR_SW	1.420	100	033N-109W-09-NWSE	6692	CR CC20/041
P5587.0D	FLAG DITCH	LOUIS BRODERSON;	10/17/1903	IRR_SW	1.280	90	032N-108W-32-SENE	6669	CR CC20/020
P5588.0D	SPUR DITCH	LOUIS BRODERSON;	10/17/1903	IRR_SW	0.680	48	032N-108W-33-SESW	6670	CR CC20/021
P5587.0D	FLAG DITCH	Mrs C. VIBLE;	10/17/1903	IRR_SW	0.050	2	032N-108W-32-SENE	17221	CR CC42/383
P1104.0E	ENLARGED BALLOU DITCH	EUGENE PLANK;	10/23/1903	IRR_SW	3.710	260	034N-110W-22-NWNE	7791	CR CC25/104
P4871.0E	ENLARGED BEE LINE DITCH	J CHAUNCEY AND J CLARENCE CLARK;	11/11/1903	IRR_SW	194.110	139.65	034N-110W-13-SENW	24510	CR CC62/045
P5515.0E	ENLARGED JENKINS DITCH	BAR CROSS LAND AND LIVESTOCK COMPANY;	11/11/1903	IRR_SW	854.850	615	035N-110W-05-NWSE	24511	CR CC62/046

Permit No.	Facility Name	Appropriator	Priority	Use	C.F.S/AF	Acres	HG LOC	Proof No.	CR No.
P20829.0D	RAHM DITCH	BURLEIGH DEAN BINNING; JOSEPHINE BINNING;	11/11/1903	IRR_SW	340.550	245	035N-110W-08-NESE	24881	CR CC62/438
P5855.0D	PINE GROVE DITCH	EUGENE ALEXANDER ESTATE; GRACE ALEXANDER ESTATE;	11/11/1903	IRR_SW	129.510	93.17	036N-110W-20-NWSE	24688	CR CC62/215
P5855.0D	LONE PINE DITCH	NANCY ALEXANDER ESTATE; GRACE ALEXANDER ESTATE; EUGENE ALEXANDER ESTATE; JOSEPHINE BINNING;	11/11/1903	IRR_SW	385.030	277	036N-110W-29-SESW	24688	CR CC62/216
P5855.0D	GENOA DITCH	BAR CROSS LAND AND LIVESTOCK COMPANY; GRACE ALEXANDER ESTATE;	11/11/1903	IRR_SW	107.300	77	035N-110W-08-SESE	24688	CR CC62/217
P5855.0D	WRIGHT DITCH	BAR CROSS LAND AND LIVESTOCK CO;	11/11/1903	IRR_SW	854.850	615	035N-110W-16-NWSW	24688	CR CC62/218
P5855.0D	ULRICA DITCH ACIPT HARRY RAHM DITCH	HARRY RAHM; BAR CROSS LAND AND LIVESTOCK COMPANY;	11/11/1903	IRR_SW	1206.520	868	035N-110W-28-SWNE	24688	CR CC62/219
P5855.0D	WEST FORK IRRIGATION DITCH ACIPT HARRY RAHM DITCH AND ALEXANDER DITCH	BAR CROSS LAND AND LIVESTOCK CO; HARRY RAHM; CARROLL NOBLE;	11/11/1903	IRR_SW	880.400	633.38	035N-110W-28-SENE	24688	CR CC62/220
P5855.0D	RAHM DITCH	LIZZIE LOZIER; WALTER LOZIER;	11/11/1903	IRR_SW	41.700	30	035N-110W-08-NESE	24688	CR CC62/221
P5855.0D	DENSLEY-MERRITT DITCH	HARRY RAHM;	11/11/1903	IRR_SW	328.040	236	035N-110W-21-SESW	24688	CR CC62/222
P5855.0D	STRONG DITCH	HARRY RAHM;	11/11/1903	IRR_SW	173.750	125	035N-110W-34-SWNW	24688	CR CC62/223
P5855.0D	MCDONOUGH DITCH NO. ONE	CARROLL NOBLE; HARRY RAHM;	11/11/1903	IRR_SW	379.610	273.1	035N-110W-34-SWNW	24688	CR CC62/224
P5855.0D	EDMUNSON DITCH	CARROLL NOBLE;	11/11/1903	IRR_SW	208.500	150	035N-110W-34-NESW	24688	CR CC62/225
P5855.0D	DUCK CREEK DITCH ACIPT DUCK CREEK NO. 2 DITCH	CARROLL NOBLE; JANIS JORGENSEN; FRED SHRIVER;	11/11/1903	IRR_SW	313.310	225.4	035N-110W-34-SWSW	24688	CR CC62/226
P5855.0D	ALEXANDER DITCH	CARROLL NOBLE;	11/11/1903	IRR_SW	11.120	8	035N-110W-34-NESW	24688	CR CC62/227
P5855.0D	EAST CHANNEL DITCH	WILLIAM ALEXANDER;	11/11/1903	IRR_SW	383.500	275.9	035N-110W-34-SWNE	24688	CR CC62/228
P5855.0D	MCKINLEY DITCH ACT HARRY RAHM DITCH	HARRY RAHM;	11/11/1903	IRR_SW	601.100	432.45	035N-110W-34-NESW	24688	CR CC62/229
P5855.0D	YAMPA DITCH	CARROLL NOBLE;	11/11/1903	IRR_SW	566.290	407.4	034N-110W-11-NWNW	24688	CR CC62/230
P5855.0D	BELKNAP AND NOBLE DITCH	CARROLL NOBLE;	11/11/1903	IRR_SW	305.800	220	034N-110W-11-NWNW	24688	CR CC62/231
P5855.0D	CONVERSE DITCH	CARL JORGENSEN; JANIS JORGENSEN; JAMES JORGENSEN; G JORGENSEN;	11/11/1903	IRR_SW	2532.580	1822	034N-110W-03-SESE	24688	CR CC62/232
P5855.0D	BELKNAP NO. ONE DITCH	CARROLL NOBLE;	11/11/1903	IRR_SW	230.180	165.6	034N-110W-14-NENE	24688	CR CC62/233
P5855.0D	BALLOU DITCH	FRANK TYLER;	11/11/1903	IRR_SW	437.850	315	034N-110W-22-NWNE	24688	CR CC62/234
P5855.0D	MCNISH DITCH	LEE THOMSON;	11/11/1903	IRR_SW	159.850	115	035N-110W-34-SWSW	24688	CR CC62/235
P5855.0D	BEE LINE DITCH	GEORGE JORGENSEN; FRED SHRIVER; FRANK STEELE; MILFORD STEELE;	11/11/1903	IRR_SW	1772.800	1275.4	034N-110W-13-SENW	24688	CR CC62/236
P5855.0D	BOYCE DITCH	MILFORD STEELE;	11/11/1903	IRR_SW	187.650	135	034N-109W-30-NWSE	24688	CR CC62/237
P5855.0D	JENKINS DITCH ACIPT NEW FORK NO. 2 DITCH	LEE THOMSON; SCHOOL DISTRICT NO. TWO OF SUBLETTE COUNTY;	11/11/1903	IRR_SW	55.600	40	035N-110W-05-NWSE	24688	CR CC62/238
P5855.0D	HOFF DITCH	FRED SHRIVER;	11/11/1903	IRR_SW	27.800	20	034N-109W-19-NWSW	24688	CR CC62/240
P5855.0D	REYNOLDS DITCH	JAMES JORGENSEN; JANIS JORGENSEN;	11/11/1903	IRR_SW	458.700	330	034N-110W-15-NWNE	24688	CR CC62/241
P5855.0D	JOHNSON DITCH	BAR CROSS LAND AND LIVESTOCK COMPANY;	11/11/1903	IRR_SW	27.800	20	035N-110W-27-SWSW	24688	CR CC62/242
P4854.0E	ENLARGED PINE GROVE DITCH	EUGENE ALEXANDER ESTATE;	11/11/1903	IRR_SW	55.040	39.6	036N-110W-20-NWSE	24689	CR CC62/243
P4854.0E	ENLARGED PINE GROVE DITCH	GRACE ALEXANDER ESTATE;	11/11/1903	IRR_SW	373.170	268.47	036N-110W-20-NWSE	24690	CR CC62/244
P4854.0E	ENLARGED PINE GROVE DITCH	NANCY ALEXANDER ESTATE;	11/11/1903	IRR_SW	10.980	7.9	036N-110W-20-NWSE	24691	CR CC62/245
P4854.0E	ENLARGED PINE GROVE DITCH	JOSEPHINE BINNING;	11/11/1903	IRR_SW	19.460	14	036N-110W-20-NWSE	24692	CR CC62/246
P4855.0E	ENLARGED LONE PINE DITCH	CHARLES C ALEXANDER ESTATE;	11/11/1903	IRR_SW	76.170	54.8	036N-110W-29-SESW	24693	CR CC62/247
P4855.0E	ENLARGED LONE PINE DITCH	EUGENE ALEXANDER ESTATE;	11/11/1903	IRR_SW	48.370	34.8	036N-110W-29-SESW	24694	CR CC62/248
P4855.0E	ENLARGED LONE PINE DITCH	GRACE ALEXANDER ESTATE;	11/11/1903	IRR_SW	11.120	8	036N-110W-29-SESW	24695	CR CC62/249
P4855.0E	ENLARGED LONE PINE DITCH	LAWRENCE AND CHARLES ALEXANDER;	11/11/1903	IRR_SW	6.530	4.7	036N-110W-29-SESW	24696	CR CC62/250
P4855.0E	ENLARGED LONE PINE DITCH	NANCY ALEXANDER ESTATE;	11/11/1903	IRR_SW	68.110	49	036N-110W-29-SESW	24697	CR CC62/251
P4855.0E	ENLARGED LONE PINE DITCH	JOSEPHINE BINNING;	11/11/1903	IRR_SW	11.680	8.4	036N-110W-29-SESW	24698	CR CC62/252
P4856.0E	ENLARGED ALEXANDER DITCH	CHARLES C. ALEXANDER ESTATE;	11/11/1903	IRR_SW	20.020	14.4	035N-110W-34-NESW	24699	CR CC62/253
P4856.0E	ENLARGED ALEXANDER DITCH	EUGENE ALEXANDER ESTATE;	11/11/1903	IRR_SW	21.410	15.4	035N-110W-34-NESW	24700	CR CC62/254
P4856.0E	ENLARGED ALEXANDER DITCH	GRACE ALEXANDER ESTATE;	11/11/1903	IRR_SW	7.510	5.4	035N-110W-34-NESW	24701	CR CC62/255
P4857.0E	ENLARGED RAHM DITCH	LIZZIE, WALTER, IRVING LOZIER;	11/11/1903	IRR_SW	462.870	333	035N-110W-08-NESE	24702	CR CC62/256
P4858.0E	ENLARGED GENOA DITCH	GRACE ALEXANDER ESTATE;	11/11/1903	IRR_SW	34.190	24.6	035N-110W-08-SESE	24703	CR CC62/257
P4858.0E	ENLARGED GENOA DITCH	BAR CROSS LAND AND LIVESTOCK CO;	11/11/1903	IRR_SW	2.780	2	035N-110W-08-SESE	24704	CR CC62/258
P4859.0E	ENLARGED JENKINS DITCH	BAR CROSS LAND AND LIVESTOCK COMPANY;	11/11/1903	IRR_SW	299.130	215.2	035N-110W-05-NWSE	24705	CR CC62/259
P4859.0E	ENLARGED JENKINS DITCH	CARROLL NOBLE;	11/11/1903	IRR_SW	13.900	10	035N-110W-05-NWSE	24706	CR CC62/260

Permit No.	Facility Name	Appropriator	Priority	Use	C F.S/AF	Acres	HG LOC	Proof No.	CR No.
P4860.0E	ENLARGED WRIGHT DITCH	BAR CROSS LAND AND LIVESTOCK COMPANY;	11/11/1903	IRR_SW	460.230	331.1	035N-110W-16-NWSW	24707	CR CC62/261
P4861.0E	ENLARGED DENSLEY-MERRITT DITCH	BAR CROSS LAND AND LIVESTOCK COMPANY;	11/11/1903	IRR_SW	83.820	60.3	035N-110W-21-SESW	24708	CR CC62/262
P4861.0E	ENLARGED DENSLEY-MERRITT DITCH	HARRY RAHM;	11/11/1903	IRR_SW	133.160	95.16	035N-110W-21-SESW	24709	CR CC62/263
P4862.0E	ENLARGED MCDONOUGH DITCH NO. 1	CARROLL NOBLE;	11/11/1903	IRR_SW	15.010	10.8	035N-110W-34-SWNW	24710	CR CC62/264
P4862.0E	ENLARGED MCDONOUGH DITCH NO. 1	HARRY RAHM;	11/11/1903	IRR_SW	14.180	10.2	035N-110W-34-SWNW	24711	CR CC62/265
P4863.0E	ENLARGED JOHNSON DITCH	BAR CROSS LAND AND LIVESTOCK COMPANY;	11/11/1903	IRR_SW	35.860	25.8	035N-110W-28-SESE	24712	CR CC62/266
P4863.0E	ENLARGED JOHNSON DITCH	HARRY RAHM;	11/11/1903	IRR_SW	4.450	3.2	035N-110W-28-SESE	24713	CR CC62/267
P4864.0E	ENLARGED STRONG DITCH	BAR CROSS LAND AND LIVESTOCK COMPANY;	11/11/1903	IRR_SW	23.350	16.8	035N-110W-34-SWNW	24714	CR CC62/268
P4864.0E	ENLARGED STRONG DITCH	HARRY RAHM;	11/11/1903	IRR_SW	10.840	7.8	035N-110W-34-SWNW	24715	CR CC62/269
P4865.0E	ENLARGED ALEXANDER DITCH	W J ALEXANDER;	11/11/1903	IRR_SW	24.460	17.6	035N-110W-34-NESW	24716	CR CC62/270
P4865.0E	ENLARGED ALEXANDER DITCH	CARROLL NOBLE;	11/11/1903	IRR_SW	72.140	51.9	035N-110W-34-NESW	24717	CR CC62/271
P4865.0E	ENLARGED ALEXANDER DITCH	HARRY RAHM;	11/11/1903	IRR_SW	10.840	7.8	035N-110W-34-NESW	24718	CR CC62/272
P4866.0E	ENLARGED ULRICA DITCH	BAR CROSS LAND AND LIVESTOCK COMPANY;	11/11/1903	IRR_SW	28.080	20.2	035N-110W-28-SWNE	24719	CR CC62/273
P4866.0E	ENLARGED ULRICA DITCH ACT HARRY RAHM DITCH	HARRY RAHM;	11/11/1903	IRR_SW	55.600	40	035N-110W-28-SWNE	24720	CR CC62/274
P4867.0E	ENLARGED YAMPA DITCH	CARL JORGENSEN;	11/11/1903	IRR_SW	6.950	5	034N-110W-11-NWNW	24721	CR CC62/275
P4867.0E	ENLARGED YAMPA DITCH ACIPT HARRY RAHM DITCH	CARROLL NOBLE;	11/11/1903	IRR_SW	745.870	536.6	034N-110W-11-NWNW	24722	CR CC62/276
P4868.0E	ENLARGED EDMUNSON DITCH	CARROLL NOBLE;	11/11/1903	IRR_SW	31.270	22.5	035N-110W-34-NESW	24723	CR CC62/277
P4869.0E	ENLARGED DUCK CREEK DITCH	W J ALEXANDER;	11/11/1903	IRR_SW	3.190	2.3	035N-110W-34-SWSW	24724	CR CC62/278
P4869.0E	ENLARGED DUCK CREEK DITCH	CARROLL NOBLE;	11/11/1903	IRR_SW	55.180	39.7	035N-110W-34-SWSW	24725	CR CC62/279
P4869.0E	ENLARGED DUCK CREEK DITCH ACT DUCK CREEK NO. 2 DITCH	LEE THOMSON;	11/11/1903	IRR_SW	8.340	6	034N-110W-03-SESW	24726	CR CC62/280
P4870.0E	ENLARGED STRONG DITCH NO. TWO	BAR CROSS LAND & LIVESTOCK COMPANY;	11/11/1903	IRR_SW	35.580	25.6	035N-110W-21-SENW	24727	CR CC62/281
P4870.0E	ENLARGED STRONG DITCH NO. TWO ACT ULRICA DITCH	HARRY RAHM;	11/11/1903	IRR_SW	23.630	17	035N-110W-28-SWNE	24728	CR CC62/282
P4871.0E	ENLARGED BEE LINE DITCH	GEORGE JORGENSEN;	11/11/1903	IRR_SW	29.470	21.2	034N-110W-13-SENW	24729	CR CC62/283
P4871.0E	ENLARGED BEE LINE DITCH	CARROLL NOBLE;	11/11/1903	IRR_SW	3.890	2.8	034N-110W-13-SENW	24730	CR CC62/284
P4871.0E	ENLARGED BEE LINE DITCH	FRED SHRIVER;	11/11/1903	IRR_SW	65.610	47.2	034N-110W-13-SENW	24731	CR CC62/285
P4871.0E	ENLARGED BEE LINE DITCH	FRANK STEELE;	11/11/1903	IRR_SW	159.570	114.8	034N-110W-13-SENW	24732	CR CC62/286
P4871.0E	ENLARGED BEE LINE DITCH	MILFORD STEELE;	11/11/1903	IRR_SW	26.130	18.8	034N-110W-13-SENW	24733	CR CC62/287
P4872.0E	ENLARGED BOYCE DITCH	EDWARD STEELE;	11/11/1903	IRR_SW	390.870	281.2	034N-109W-30-NWSE	24735	CR CC62/289
P4872.0E	ENLARGED BOYCE DITCH	MILFORD STEELE;	11/11/1903	IRR_SW	44.760	31.09	034N-109W-30-NWSE	24736	CR CC62/290
P4873.0E	ENLARGED REYNOLDS-MCNISH DITCH	JAMES JORGENSEN;	11/11/1903	IRR_SW	130.100	93.6	034N-110W-10-NWNE	24737	CR CC62/291
P4873.0E	ENLARGED REYNOLDS-MCNISH DITCH	LEE THOMSON;	11/11/1903	IRR_SW	12.510	9	034N-110W-10-NWNE	24738	CR CC62/292
P4874.0E	ENLARGED REYNOLDS DITCH	GEORGE JORGENSEN;	11/11/1903	IRR_SW	33.360	24	034N-110W-15-NWNE	24739	CR CC62/293
P4874.0E	ENLARGED REYNOLDS DITCH	FRANK TYLER;	11/11/1903	IRR_SW	65.330	47	034N-110W-15-NWNE	24740	CR CC62/294
P4875.0E	ENLARGED CRAWFORD DITCH	JAMES JORGENSEN;	11/11/1903	IRR_SW	100.080	72	034N-110W-15-NESW	24741	CR CC62/295
P4875.0E	ENLARGED CRAWFORD DITCH	JANIS JORGENSEN;	11/11/1903	IRR_SW	151.230	108.8	034N-110W-15-NESW	24742	CR CC62/296
P4875.0E	ENLARGED CRAWFORD DITCH	FRANK TYLER;	11/11/1903	IRR_SW	113.420	81.6	034N-110W-15-NESW	24743	CR CC62/297
P4876.0E	ENLARGED BALLOU-PLANK DITCH	FRANK TYLER;	11/11/1903	IRR_SW	981.900	706.4	034N-110W-22-NWNE	24744	CR CC62/298
P4877.0E	ENLARGED METZ DITCH	GEORGE C BLAIR ESTATE;	11/11/1903	IRR_SW	16.400	11.8	034N-110W-36-SWNW	24745	CR CC62/299
P4877.0E	ENLARGED METZ DITCH	J. CHAUNCEY CLARK; J. CLARENCE CLARK;	11/11/1903	IRR_SW	101.190	72.8	034N-110W-36-SWNW	24746	CR CC62/300
P4877.0E	ENLARGED METZ DITCH	EDWARD STEELE;	11/11/1903	IRR_SW	16.120	4.4	034N-110W-36-SWNW	24747	CR CC62/301
P4878.0E	ENLARGED BELKNAP AND NOBLE DITCH	CARL JORGENSEN;	11/11/1903	IRR_SW	16.540	11.9	034N-110W-11-NWNW	24748	CR CC62/302
P4878.0E	ENLARGED BELKNAP AND NOBLE DITCH	CARROLL NOBLE;	11/11/1903	IRR_SW	47.400	34.1	034N-110W-11-NWNW	24749	CR CC62/303
P4879.0E	ENLARGED GRACE DITCH	GRACE ALEXANDER ESTATE;	11/11/1903	IRR_SW	22.240	16	036N-110W-29-NESW	24750	CR CC62/304
P480.0R	NEW FORK LAKE RESERVOIR	NEW FORK LAKE IRRIGATION DISTRICT;	11/11/1903	IRR_SW	20340.000AF	0	036N-110W-15-SESW	24506	CR CR01/417
P4872.0E	ENLARGED BOYCE DITCH ACIPT STIPA DITCH	WILLIAM AND MAGDALINE BLOOM;	11/11/1903	IRR_SW	99.660	71.7	034N-109W-30-NWSE		CR CC72/497
P5855.0D	GENEVA DITCH ACT STIPA DITCH	MAGDALINE BLOOM; WILLIAM BLOOM;	11/11/1903	IRR_SW	45.870	33	033N-109W-05-SWNE		CR CC72/500
P1150.0E	ENLARGED ULRICA DITCH	ANDREW MERRITT;	01/05/1904	IRR_SW	0.570	40	035N-110W-28-SWNE	6693	CR CC20/042
P1151.0E	ENLARGED STRONG DITCH	ANDREW MERRITT;	01/05/1904	IRR_SW	0.400	28	035N-110W-34-SWNW	6694	CR CC20/043
P5763.0D	STRONG NO. 2 DITCH ACIPT ULRICA DITCH	P. JENKINS;	01/05/1904	IRR_SW	0.640	45	035N-110W-21-SENW	14051	CR CC37/438

Permit No.	Facility Name	Appropriator	Priority	Use	C F.S/AF	Acres	HG LOC	Proof No.	CR No
P1161.0E	ENLARGED WRIGHT DITCH	HARRIET OSBORN;	02/06/1904	IRR_SW	4.500	315	035N-110W-16-NWSW	6695	CR CC20/044
P1303.0E	ENLARGED BEE LINE DITCH	HENRY HOFF;	11/21/1904	IRR_SW	1.140	80	034N-110W-13-SENW	6696	CR CC20/045
P1377.0E	ENLARGED DENSLEY-MERRITT DITCH	EFFIE RAHM;	04/13/1905	IRR_SW	1.400	98	035N-110W-21-SESW	9977	CR CC30/138
P1484.0E	ENLARGED POSTEL DITCH	MARTIN BRUNT;	01/05/1906	IRR_SW	0.440	31	032N-108W-28-SESW	7787	CR CC25/101
P1545.0E	ENLARGED CONVERSE DITCH	ALBERT EDMUNDSON;	04/26/1906	IRR_SW	1.140	80	034N-110W-03-SESE	9978	CR CC30/139
P1604.0E	ENLARGED POPE DITCH	JAMES ORCUTT;	05/16/1906	IRR_SW	0.740	52	032N-108W-08-SWNW	10862	CR CC32/016
P1571.0E	ENLARGED SILL DITCH	JOHN BLOOM;	06/28/1906	IRR_SW	3.870	271	033N-109W-09-SWNW	9979	CR CC30/140
P1638.0E	ENLARGED LAST CHANCE DITCH ACT PARADISE CANAL	WILLIAM BOWER;	11/22/1906	IRR_SW	0.910	64	032N-109W-01-SWNE	9013	CR CC27/314
P1638.0E	ENLARGED LAST CHANCE DITCH ACT PARADISE CANAL	EDWARD BUCK;	11/22/1906	IRR_SW	0.250	18	032N-109W-01-SWNE	9014	CR CC27/315
P1638.0E	ENLARGED LAST CHANCE DITCH ACT PARADISE CANAL	WILLIAM SEABOLT;	11/22/1906	IRR_SW	0.450	32	032N-109W-01-SWNE	9015	CR CC27/316
P1638.0E	ENLARGED LAST CHANCE DITCH ACT PARADISE CANAL	THEODORE TREGONING;	11/22/1906	IRR_SW	0.210	15	032N-109W-01-SWNE	9016	CR CC27/317
P1638.0E	ENLARGED LAST CHANCE DITCH ACT PARADISE CANAL	JOHN SEABOLT;	11/22/1906	IRR_SW	0.850	60	032N-109W-01-SWNE	9017	CR CC27/318
P1638.0E	ENLARGED LAST CHANCE DITCH ACT PARADISE CANAL	DOLPHUS WOLCOTT;	11/22/1906	IRR_SW	0.440	31	032N-109W-01-SWNE	9018	CR CC27/319
P1637.0E	ENLARGED SEABOLT EAST SIDE DITCH	WILLIAM BOWER;	11/22/1906	IRR_SW	2.080	146	032N-108W-16-NESW	9019	CR CC27/320
P1637.0E	ENLARGED SEABOLT EAST SIDE DITCH	THEODORE TREGONING;	11/22/1906	IRR_SW	0.040	3	032N-108W-16-NESW	9020	CR CC27/321
P1762.0E	ENLARGED SILL DITCH	MELISSA BLOOM;	07/05/1907	IRR_SW	0.700	49	033N-109W-09-SWNW	9980	CR CC30/141
P1773.0E	ENLARGED BOYCE DITCH	FANNIE BURCH;	07/22/1907	IRR_SW	0.130	9.02	034N-109W-30-NWSE	9981	CR CC30/142
P7999.0D	RUPERT NO. 2 DITCH	ROBERT CROSTHWAITE;	09/26/1907	IRR_SW	0.910	64	033N-109W-09-SWNW	9982	CR CC30/143
P7998.0D	RUPERT NO. 1 DITCH ACIPT RENO PIPELINE	ROBERT CROSTHWAITE;	09/26/1907	IRR_SW	1.130	79.65	033N-109W-09-NWNE	9983	CR CC30/144
P1817.0E	ENLARGED POPE DITCH	W BOWER;	01/14/1908	IRR_SW	2.250	157.8	032N-108W-08-SWNW	15926	CR CC40/303
P12239.0D	JENKINS DITCH	PERRY JENKINS; EVA JENKINS;	02/06/1911	IRR_SW	11.070	775	035N-110W-05-NWSE	22682	CR CC57/442
P12239.0D	JENKINS DITCH	CORA HOLT THOMSON;	02/06/1911	IRR_SW	4.570	320	035N-110W-05-NWSE	19927	CR CC46/377
P2536.0E	ENLARGED PINE GROVE DITCH	CHARLES ALEXANDER;	09/02/1911	IRR_SW	5.200	364.17	036N-110W-20-NWSE	16346	CR CC41/049
P12186.0D	RAHM DITCH	GOTTFRIED RAHM;	12/30/1913	IRR_SW	5.180	363	035N-110W-08-NESE	16345	CR CC41/048
P2958.0E	ENLARGED CRAWFORD DITCH	A F LANDERS;	05/20/1914	IRR_SW	1.710	120	034N-110W-15-NESW	17224	CR CC42/386
P3082.0E	ENLARGED POPE DITCH	W W BOWER;	10/27/1914	IRR_SW	1.030	72.7	032N-108W-08-SWNW	15925	CR CC40/302
P12843.0D	CHANNEL DITCH ACT HARRY RAHM DITCH	JOHN RAHM;	11/28/1914	IRR_SW	0.570	40	035N-110W-34-NESW	14667	CR CC38/313
P13032.0D	ALEXANDER DITCH	W. ALEXANDER;	02/02/1915	IRR_SW	0.070	5	035N-110W-34-NESW	14052	CR CC37/439
P13032.0D	ALEXANDER DITCH	P. JENKINS;	02/02/1915	IRR_SW	0.110	8	035N-110W-34-NESW	14053	CR CC37/440
P14665.0D	ALEXANDER DITCH	EUGENE ALEXANDER;	03/24/1917	IRR_SW	1.200	84	036N-110W-32-SWSW	17223	CR CC42/385
P15750.0D	ECKLUND DITCH	STATE OF WYOMING, BOARD OF LAND COMMISSIONERS; CHRISTMANN CORPORATION;	03/01/1920	IRR_SW	1.060	74	033N-109W-35-NENE	30076	CR CC70/202
P4392.0E	ENLARGED ECKLUND DITCH	LAWRENCE ECKLUND;	10/04/1920	IRR_SW	2.380	166.9	033N-109W-35-NENE	19483	CR CC45/529
P4315.0E	ENLARGED RAHM DITCH	GUY C DECKER, GUARDIAN;	08/07/1922	IRR_SW	3.500	245	035N-110W-08-NESE	19709	CR CC46/142
P4406.0E	ENLARGED PRIDDY DITCH	ANNIE MALONEK;	12/03/1923	IRR_SW	0.240	17	032N-108W-28-SESW	19647	CR CC46/075
P4843.0E	ENLARGED BEE LINE DITCH	ED STEELE;	06/11/1929	IRR_SW	0.270	18.8	034N-110W-13-SENW	21412	CR CC52/135
P4843.0E	ENLARGED BEE LINE DITCH	FRED EKLUND;	06/11/1929	IRR_SW	0.220	15.6	034N-110W-13-SENW	21413	CR CC52/136
P4843.0E	ENLARGED BEE LINE DITCH	FRANK STEELE;	06/11/1929	IRR_SW	0.320	22.6	034N-110W-13-SENW	21414	CR CC52/137
P4834.0E	ENLARGED MCDONOUGH NO. 1 DITCH	CARROLL NOBLE;	06/11/1929	IRR_SW	0.150	10.8	035N-110W-34-SWNW	21539	CR CC52/265
P4837.0E	ENLARGED EDMUNSON DITCH	CARROLL NOBLE;	06/11/1929	IRR_SW	0.320	22.5	035N-110W-34-NESW	21540	CR CC52/266
P4840.0E	ENLARGED YAMPA DITCH	CARROLL NOBLE;	06/11/1929	IRR_SW	0.620	43.4	034N-110W-11-NWNW	21541	CR CC52/267
P4841.0E	ENLARGED BELKNAP AND NOBLE DITCH	CARROLL NOBLE;	06/11/1929	IRR_SW	0.110	8.1	034N-110W-11-NESW	21542	CR CC52/268
P4842.0E	ENLARGED BELKNAP NO. 1 DITCH	NELS JORGENSEN;	06/11/1929	IRR_SW	0.190	13.4	034N-110W-14-NENE	20889	CR CC49/108
P4842.0E	ENLARGED BELKNAP NO. 1 DITCH	CARRIE JORGENSEN;	06/11/1929	IRR_SW	0.090	6	034N-110W-14-NENE	20890	CR CC49/109
P4843.0E	ENLARGED BEE LINE DITCH	NELS JORGENSEN;	06/11/1929	IRR_SW	0.700	49.2	034N-110W-13-SENW	20891	CR CC49/110
P4836.0E	ENLARGED ALEXANDER DITCH	CARROLL NOBLE;	06/11/1929	IRR_SW	0.740	51.9	035N-110W-34-NESW	21765	CR CC52/511
P4844.0E	ENLARGED BOYCE DITCH	CHARLES BAYER;	06/11/1929	IRR_SW	0.320	22.07	034N-109W-30-NWSE	22892	CR CC58/150
P4842.0E	ENLARGED BELKNAP NO. 1 DITCH	ABNER LUMAN COMPANY;	06/11/1929	IRR_SW	0.200	14	034N-110W-14-NENE	23122	CR CC58/343
P18185.0D	GRACE DITCH	GRACE ALEXANDER ESTATE;	06/11/1929	IRR_SW	0.230	16	036N-110W-29-NESW	24657	CR CC62/184
P4826.0E	ENLARGED PINE GROVE DITCH	EUGENE ALEXANDER ESTATE;	06/11/1929	IRR_SW	0.250	17.6	036N-110W-20-NWSE	24658	CR CC62/185
P4826.0E	ENLARGED PINE GROVE DITCH	GRACE ALEXANDER ESTATE;	06/11/1929	IRR_SW	0.400	28.2	036N-110W-20-NWSE	24659	CR CC62/186
P4826.0E	ENLARGED PINE GROVE DITCH	NANCY ALEXANDER ESTATE;	06/11/1929	IRR_SW	0.110	7.9	036N-110W-20-NWSE	24660	CR CC62/187
P4827.0E	ENLARGED LONE PINE DITCH	CHARLES C ALEXANDER ESTATE;	06/11/1929	IRR_SW	0.780	54.8	036N-110W-29-SESW	24661	CR CC62/188
P4827.0E	ENLARGED LONE PINE DITCH	CHARLES AND LAWRENCE ALEXANDER;	06/11/1929	IRR_SW	0.070	4.7	036N-110W-29-SESW	24662	CR CC62/189

Permit No.	Facility Name	Appropriator	Priority	Use	C.F.S/AF	Acres	HG LOC	Proof No.	CR No.
P4827.0E	ENLARGED LONE PINE DITCH	EUGENE ALEXANDER ESTATE;	06/11/1929	IRR_SW	0.500	34.8	036N-110W-29-SESW	24663	CR CC62/190
P4827.0E	ENLARGED LONE PINE DITCH	GRACE ALEXANDER ESTATE;	06/11/1929	IRR_SW	0.110	8	036N-110W-29-SESW	24664	CR CC62/191
P4827.0E	ENLARGED LONE PINE DITCH ACIPT JENKINS DITCH	NANCY ALEXANDER ESTATE;	06/11/1929	IRR_SW	0.700	49	036N-110W-29-SESW	24665	CR CC62/192
P4827.0E	ENLARGED LONE PINE DITCH	JOSEPHINE BINNING;	06/11/1929	IRR_SW	0.120	8.4	036N-110W-29-SESW	24666	CR CC62/193
P4828.0E	ENLARGED GENOA DITCH	GRACE ALEXANDER ESTATE;	06/11/1929	IRR_SW	0.350	24.6	035N-110W-08-SESE	24667	CR CC62/194
P4828.0E	ENLARGED GENOA DITCH	STATE OF WYOMING, BOARD OF LAND COMMISSIONERS; BAR CROSS LAND AND LIVESTOCK COMPANY;	06/11/1929	IRR_SW	0.070	4.6	035N-110W-08-SESE	24668	CR CC62/195
P4828.0E	ENLARGED GENOA DITCH	BAR CROSS LAND AND LIVESTOCK COMPANY;	06/11/1929	IRR_SW	0.030	2	035N-110W-08-SESE	24669	CR CC62/196
P4829.0E	ENLARGED JENKINS DITCH	BAR CROSS LAND AND LIVESTOCK COMPANY;	06/11/1929	IRR_SW	0.310	22	035N-110W-05-NWSE	24670	CR CC62/197
P4829.0E	ENLARGED JENKINS DITCH	CARROLL NOBLE;	06/11/1929	IRR_SW	1.800	126.5	035N-110W-05-NWSE	24671	CR CC62/198
P4829.0E	ENLARGED JENKINS DITCH	SCHOOL DISTRICT NO. TWO SUBLETTE COUNTY,;	06/11/1929	IRR_SW	0.020	1.25	035N-110W-05-NWSE	24672	CR CC62/199
P4829.0E	ENLARGED JENKINS DITCH	LEE THOMSON;	06/11/1929	IRR_SW	0.550	38.75	035N-110W-05-NWSE	24673	CR CC62/200
P4831.0E	ENLARGED DENSLEY-MERRITT DITCH	BAR CROSS LAND AND LIVESTOCK COMPANY;	06/11/1929	IRR_SW	0.250	17.6	035N-110W-21-SESW	24674	CR CC62/201
P4831.0E	ENLARGED DENSLEY-MERRITT DITCH	HARRY RAHM;	06/11/1929	IRR_SW	0.220	15.6	035N-110W-21-SESW	24675	CR CC62/202
P4832.0E	ENLARGED WRIGHT DITCH ACIPT STRONG NO. 2 DITCH	BAR CROSS LAND AND LIVESTOCK COMPANY;	06/11/1929	IRR_SW	0.690	48.1	035N-110W-21-SENW	24676	CR CC62/203
P4833.0E	ENLARGED JOHNSON DITCH	BAR CROSS LAND AND LIVESTOCK COMPANY;	06/11/1929	IRR_SW	0.370	25.8	035N-110W-27-SWSW	24677	CR CC62/204
P4833.0E	ENLARGED JOHNSON DITCH	HARRY RAHM;	06/11/1929	IRR_SW	0.050	3.2	035N-110W-27-SWSW	24678	CR CC62/205
P4834.0E	ENLARGED MCDONOUGH NO. 1 DITCH	HARRY RAHM;	06/11/1929	IRR_SW	0.150	10.2	035N-110W-34-SWNW	24679	CR CC62/206
P4835.0E	ENLARGED STRONG DITCH	BAR CROSS LAND AND LIVESTOCK COMPANY;	06/11/1929	IRR_SW	0.240	16.8	035N-110W-34-SWNW	24680	CR CC62/207
P4835.0E	ENLARGED STRONG DITCH	HARRY RAHM;	06/11/1929	IRR_SW	0.130	8.8	035N-110W-34-SWNW	24681	CR CC62/208
P4840.0E	ENLARGED YAMPA DITCH	CARL JORGENSEN;	06/11/1929	IRR_SW	0.070	5	034N-110W-11-NWNW	24682	CR CC62/209
P4840.0E	ENLARGED YAMPA DITCH	CARROLL NOBLE;	06/11/1929	IRR_SW	1.880	131.6	034N-110W-11-NWNW	24683	CR CC62/210
P4841.0E	ENLARGED BELKNAP AND NOBLE DITCH	CARL JORGENSEN;	06/11/1929	IRR_SW	0.170	11.9	034N-110W-11-NESW	24684	CR CC62/211
P4843.0E	ENLARGED BEE LINE DITCH	J CHAUNCEY AND J CLARENCE CLARK;	06/11/1929	IRR_SW	2.000	139.65	034N-110W-13-SENW	24686	CR CC62/213
P4844.0E	ENLARGED BOYCE DITCH	EDWARD STEELE;	06/11/1929	IRR_SW	0.120	8.6	034N-109W-30-NWSE	24687	CR CC62/214
P4843.0E	ENLARGED BEE LINE DITCH ACIPT STIPA DITCH	WILLIAM AND MAGDALINE BLOOM;	06/11/1929	IRR_SW	1.020	71.7	034N-110W-13-SENW		CR CC72/496
P21100.0D	PARADISE CANAL ACIPT BARGER SPRINKLER SYSTEM NO. 4	FAY BARGER;	09/30/1952	IRR_SW	2.190	153	032N-109W-01-SWNE	31464	CR CC72/243
P21100.0D	PARADISE CANAL	CARL RAY JORGENSEN;	09/30/1952	IRR_SW	3.000	210	032N-109W-01-SWNE	32650	CR CC73/353
P21100.0D	PARADISE CANAL	KENNETH E. AND LORENA L. WIDSTRAND;	09/30/1952	IRR_SW	2.270	159	032N-109W-01-SWNE	31011	CR CC71/495
P21100.0D	PARADISE CANAL	ANNA TOWNSEND;	09/30/1952	IRR_SW	3.930	274.86	032N-109W-01-SWNE	31012	CR CC71/496
P21100.0D	PARADISE CANAL	DONALD L. AND LILLIAN E. TOWNSEND;	09/30/1952	IRR_SW	1.860	130	032N-109W-01-SWNE	31013	CR CC71/497
P21100.0D	PARADISE CANAL	LOREN JOHNSON;	09/30/1952	IRR_SW	4.000	280	032N-109W-01-SWNE	27023	CR CC66/193
P21100.0D	PARADISE CANAL	HELEN SHEFFY;	09/30/1952	IRR_SW	3.440	241	032N-109W-01-SWNE	27024	CR CC66/194
P21100.0D	PARADISE CANAL	IVAN SHEFFY;	09/30/1952	IRR_SW	1.630	114	032N-109W-01-SWNE	27025	CR CC66/195
P21100.0D	PARADISE CANAL	GEORGE WESTMAN;	09/30/1952	IRR_SW	1.140	80	032N-109W-01-SWNE	27026	CR CC66/196
P21100.0D	PARADISE CANAL	IVAN SHEFFY;	09/30/1952	IRR_SW	0.570	40	032N-109W-01-SWNE	27189	CR CC66/315
P5701.0E	ENLARGED JENKINS DITCH	BAR CROSS LAND AND LIVESTOCK COMPANY;	11/10/1953	IRR_SW	2.850	200	035N-110W-05-NWSE	27791	CR CC67/220
P5801.0E	ENLARGED PARADISE CANAL	ULTRA RESOURCES INC;	06/22/1954	IRR_SW	1.040	72	032N-109W-01-SWNE	31307	CR CC92/240
P5990.0E	ENLARGED LAST CHANCE DITCH ACT PARADISE CANAL	FAY BARGER;	06/29/1960	IRR_SW	1.140	80	032N-109W-01-SWNE	27422	CR CC67/032
P6564.0E	ENLARGED PARADISE CANAL	DONALD SHRIVER; CHARLENE SHRIVER;	11/19/1974	IRR_SW	2.070	145	032N-109W-01-SWNE	32891	CR CC74/206
P6562.0E	ENLARGED PARADISE CANAL	ULTRA RESOURCES INC;	11/19/1974	IRR_SW, STO	0.286	16	032N-109W-01-SWNE	34661	CR CC92/241
P6572.0E	ENLARGED PARADISE CANAL	ULTRA RESOURCES INC;	11/19/1974	IRR_SW, STO	1.196	80	032N-109W-01-SWNE	35915	CR CC92/242
P24663.0D	WANNER PIPELINE AND DITCH	CHARLES WANNER;	02/10/1975	IRR_SW, STO	0.298	17	033N-109W-05-NENW		CR CC74/127
P8085.0R	ABERCROMBIE FISH POND RESERVOIR	GERALD ABERCROMBIE; CAROLYN ABERCROMBIE;	11/16/1977	FIS	6.420AF	0	033N-109W-09-NWSE	32664	CR CR08/741
P6688.0E	ENLARGED RUPERT NO. 2 DITCH	GERALD AND CAROLYN ABERCROMBIE;	10/22/1979	RES	0.000	0	033N-109W-09-SWNW		CR CC73/354
P6786.0E	ENLARGED POSTEL DITCH	CHARLES CHIDSEY; MURIEL WALKER	11/09/1981	IRR_SW	0.210	14.5	032N-108W-28-SESW	36404	CR CC79/333

Permit No.	Facility Name	Appropriator	Priority	Use	C.F.S/AF	Acres	HG LOC	Proof No.	CR No.
		CHIDSEY;							
P28512.0D	BARGER SPRINKLER SYSTEMS NOS. 2 AND 3	FAY BARGER;	03/01/1984	IRR_SW	2.540	177.8	032N-108W-16-NWSW	33566	CR CC75/089
P29505.0D	NEW FORK DITCH	RUTH NOBLE; CARROLL NOBLE;	06/26/1986	IRR_SW	2.470	173	036N-110W-21-SWNW	36405	CR CC79/334
P7.0F	WEST FORK NEW FORK RIVER - INSTREAM FLOW SEGMENT 1	WYOMING WATER DEVELOPMENT COMMISSION;	02/10/1989			0	033N-109W-36-SESE	40231	CR CC89/047
P9832.0R	FEATHERDOWN RESERVOIR	ROBERT ROSS HOCKER;	03/04/1992	FIS, WL	6.440AF	0	033N-108W-31-NWSW	36441	CR CR13/351
P9919.0R	HAGENSTEIN PIT NO. 1 RESERVOIR	PAUL HAGENSTEIN;	03/23/1993	STO, WET	19.880AF	0	033N-109W-22-SENE	36958	CR CR14/174
P11772.0S	SAGE - 10 STOCK RESERVOIR	JOHN SULENTA;	05/03/1993		0.000AF		033N-109W-05-NESE	36440	CR CR13/350
P10006.0R	RENDEZVOUS RANCH POND RESERVOIR	GROS VENTRE INVESTMENT COMPANY;	10/01/1993	FIS	6.000AF	0	034N-110W-14-NENE	37842	CR CR15/205
P31369.0D	NEW FORK NO. 2 DITCH	NOBLE FAMILY LIMITED PARTNERSHIP;	04/18/1995	IRR_SW	0.650	45.31	036N-110W-22-NWNW	42360	CR CC95/128
P31487.0D	HEIDI DITCH	HEIDI HICKS WILSON;	06/22/1995	IRR_SW	0.570	40	033N-109W-09-NENW	37303	CR CC81/174
P10684.0R	KINGFISHER RESERVOIR	TOM ROSSETTER;	10/06/1997	FIS, WL	4.750AF	0	033N-109W-26-SENW	38045	CR CR15/296
P7301.0E	ENLARGED PARADISE CANAL	FRED MUSSER J;	08/20/1998	IRR_SW	1.760	123.4	032N-109W-01-SWNE	38428	CR CC82/438
P32288.0D	DON DITCH	DONALD KENDALL;	02/22/2000	RES	10.670	0	036N-110W-29-NENW	38674	CR CC83/222
P11621.0R	REMEMBRANCE RESERVOIR	GORDON D. AND NANCY P. RENO;	10/16/2000	FIS, WL	1.790AF	0	033N-109W-09-NESE	40008	CR CR18/210
P7384.0E	ENLARGED DON DITCH	NEW FORK CATTLE CO., LTD.;	01/19/2001	FTH, RES	9.860	0	036N-110W-29-NENW	40232	CR CC89/048
P11640.0R	CASCADE RESERVOIR	NEW FORK CATTLE CO., LTD.;	01/19/2001	WL		0	036N-110W-29-SENW	40242	CR CR19/033
P11641.0R	WHISPER RESERVOIR	NEW FORK CATTLE CO., LTD.;	01/19/2001	WL	0.110AF	0	036N-110W-29-SENW	40243	CR CR19/034
P11675.0R	HUNTER'S BLIND RESERVOIR	DONALD W. WHATAKER FAMILY REVOCABLE TRUST;	12/10/2003	FIS	8.520AF	0	034N-109W-32-SESW	40009	CR CR18/211
P15442.0S	KYLIES' POOL STOCK RESERVOIR	DONALD W. WHATAKER FAMILY REVOCABLE TRUST;	12/10/2003	STO	10.080AF	0	034N-109W-31-NENE	40010	CR CR18/212
P12109.0R	POLE CREEK POND RESERVOIR	S. ROBERT LEAVER FAMILY, LP;	02/17/2005	FIS	5.910AF	0	033N-108W-31-NWSE	40011	CR CR18/213
P12423.0R	TWO SONS RESERVOIR	DEATS FAMILY LIVING TRUST;	12/21/2005	FIS	4.620AF	0	033N-109W-05-SWNE	40012	CR CR18/214
P12476.0R	BROOK RESERVOIR	NOBLE FAMILY, LP;	02/06/2006	FIS	2.520AF	0	035N-110W-28-NESE	40013	CR CR18/215
P12477.0R	REESE RESERVOIR	NOBLE FAMILY LIMITED PARTNERSHIP;	02/06/2006	FIS	2.140AF	0	035N-110W-28-SESE	41396	CR CR22/135
P12711.0R	WILD POND RESERVOIR	DEATS LIVING FAMILY TRUST;	09/25/2006	FIS	2.880AF	0	033N-109W-05-SWNE	40410	CR CR19/116
P12720.0R	GOLDEN POND RESERVOIR	STUART N. AND JOANNE L. BRADOW;	09/25/2006	FIS	7.020AF	0	033N-109W-05-NWSE	40411	CR CR19/117

WARD BALL DRAW, TRIBUTARIES OF WEST FORK NEW FORK RIVER, NEW FORK RIVER, GREEN RIVER

P6802.0R	WARD BALL RESERVOIR	BOULDER IRRIGATION DISTRICT;	08/04/1965	IRR_SW	315.260AF	0	032N-108W-22-NWSE	29017	CR CR05/212

ELK GULCH, TRIBUTARIES OF WARD BALL DRAW, WEST FORK NEW FORK RIVER, NEW FORK RIVER, GREEN RIVER

P11516.0D	ELK SPRINGS DITCH	JULIUS ELMORE;	11/08/1912	IRR_SW	2.770	194	033N-107W-21-SWSW	14666	CR CC38/312
P14871.0S	ELK GULCH NO. 1 STOCK RESERVOIR	BOUSMAN LIVESTOCK INC.;	11/05/2001	STO	0.080AF	0	033N-107W-29-NWNE	39823	CR CR18/136
P14872.0S	ELK GULCH NO. 2 STOCK RESERVOIR	BOUSMAN LIVESTOCK INC.;	11/05/2001	STO	0.110AF	0	033N-107W-29-NENE	39824	CR CR18/137

BOULDER DRAW, TRIBUTARIES OF ELK GULCH, WARD BALL DRAW, WEST FORK NEW FORK RIVER, NEW FORK RIVER, GREEN RIVER

P7919.0S	BOULDER LAKE NO. 24 STOCK RESERVOIR	U.S. DEPT. OF THE INT., BUREAU OF LAND MANAGEMENT;	09/03/1974	STO	2.000AF	0	033N-107W-17-SESE	31966	CR CR08/326

NC SPRING, TRIBUTARIES OF NC SPRING DRAW, WEST FORK NEW FORK RIVER, NEW FORK RIVER, GREEN RIVER

P33902.0D	NARROWS CAMPGROUND SPRING	USDA, FOREST SERVICE;	03/12/2008	DOM_SW	0.056	0	036N-110W-11-SENE	39983	CR CC88/043

BARGER SLOUGH, TRIBUTARIES OF WEST FORK NEW FORK RIVER, NEW FORK RIVER, GREEN RIVER

P28511.0D	BARGER SPRINKLER SYSTEM NO. 1	FAY BARGER;	02/27/1984	IRR_SW	1.140	79.5	032N-108W-16-SESE	33567	CR CC75/090
P11728.0R	BOULDER COMMONS NORTH RESERVOIR	BOULDER COMMONS HOME OWNERS ASSOCIATION;	02/08/2002	FIS	2.900AF	0	032N-108W-15-NENW	40015	CR CR18/217
P11729.0R	BOULDER COMMONS SOUTH RESERVOIR	BOULDER COMMONS HOME OWNERS ASSOCIATION;	02/13/2002	FIS	4.180AF	0	032N-108W-15-SENW	40016	CR CR18/218

Permit No.	Facility Name	Appropriator	Priority	Use	C.F.S/AF	Acres	HG LOC	Proof No.	CR No.
P11733.0R	BOULDER COMMONS MIDDLE BEND RESERVOIR	BOULDER COMMONS HOME OWNERS ASSOCIATION;	04/19/2002	FIS	1.330AF	0	032N-108W-15-NENW	40017	CR CR18/219

BOULDER CREEK, TRIBUTARIES OF WEST FORK NEW FORK RIVER, NEW FORK RIVER, GREEN RIVER

P2322.0D	BURKHALTER DITCH	HEIRS OF GEORGE AND KATE BURKHALTER;	10/18/1899	IRR_SW	9.000	630	033N-108W-23-SWNW	6709	CR CC20/057
P633.0E	ENLARGED BURKHALTER DITCH	WILLIAM THOMPSON;	03/08/1901	IRR_SW	4.070	285	033N-108W-23-SWNW	6710	CR CC20/058
P3238.0D	OLIVER DITCH	JOHN AND KATE VIBLE;	06/17/1901	IRR_SW	6.840	480	033N-108W-23-SWNW	5514	CR CC07/025
P889.0E	BOULDER CANAL	CHARLES STOKES;	08/01/1902	IRR_SW	4.210	295	033N-108W-23-SWNW	8378	CR CC26/390
P889.0E	BOULDER CANAL	WILLIAM STOKES;	08/01/1902	IRR_SW	4.570	320	033N-108W-23-SWNW	8379	CR CC26/391
P889.0E	BOULDER CANAL	ZEPH JONES;	08/01/1902	IRR_SW, STO	4.570	320	033N-108W-23-SWNW	15202	CR CC39/242
P889.0E	BOULDER CANAL	JOHN WEINERT;	08/01/1902	DOM_SW, IRR_SW	2.280	160	033N-108W-23-SWNW	16281	CR CC40/678
P889.0E	BOULDER CANAL	HENRY WEINERT;	08/01/1902	DOM_SW, IRR_SW	2.280	160	033N-108W-23-SWNW	16282	CR CC40/679
P889.0E	BOULDER CANAL	CHARLES STUART;	08/01/1902	DOM_SW, IRR_SW	2.280	160	033N-108W-23-SWNW	16283	CR CC40/680
P889.0E	BOULDER CANAL	CLEMENT CARR;	08/01/1902	DOM_SW, IRR_SW	2.280	160	033N-108W-23-SWNW	16284	CR CC40/681
P889.0E	BOULDER CANAL	J SPRINGSTED;	08/01/1902	IRR_SW	2.280	160	033N-108W-23-SWNW	16285	CR CC40/682
P889.0E	BOULDER CANAL	WILLIS CLAYTON;	08/01/1902	DOM_SW, IRR_SW	2.280	160	033N-108W-23-SWNW	16286	CR CC40/683
P889.0E	BOULDER CANAL	R T DAESCHNER;	08/01/1902	DOM_SW, IRR_SW	2.280	160	033N-108W-23-SWNW	16287	CR CC40/684
P889.0E	BOULDER CANAL	F L MITCHELL;	08/01/1902	DOM_SW, IRR_SW	2.280	160	033N-108W-23-SWNW	16288	CR CC40/685
P889.0E	BOULDER CANAL	JOSEPH GLAZE;	08/01/1902	DOM_SW, IRR_SW	2.280	160	033N-108W-23-SWNW	16289	CR CC40/686
P889.0E	BOULDER CANAL	JOHN BALL;	08/01/1902	DOM_SW, IRR_SW	4.490	314.5	033N-108W-23-SWNW	16290	CR CC40/687
P889.0E	BOULDER CANAL	H A ROWE;	08/01/1902	DOM_SW, IRR_SW	1.290	90	033N-108W-23-SWNW	16512	CR CC41/400
P889.0E	BOULDER CANAL	DONALD SPARKS;	08/01/1902	DOM_SW, IRR_SW	0.860	60	033N-108W-23-SWNW	24874	CR CC62/431
P889.0E	BOULDER CANAL	H L STEELE;	08/01/1902	DOM_SW, IRR_SW	1.290	90	033N-108W-23-SWNW	24875	CR CC62/432
P889.0E	BOULDER CANAL	ZEDA ROOP;	08/01/1902	DOM_SW, IRR_SW	0.380	27	033N-108W-23-SWNW	25346	CR CC63/391
P889.0E	BOULDER CANAL	ROY LOZIER;	08/01/1902	IRR_SW	1.870	131	033N-108W-23-SWNW	24402	CR CC61/456
P906.0E	ENLARGED BURKHALTER DITCH	JAMES SPARKS;	08/25/1902	IRR_SW	3.710	260	033N-108W-23-SWNW	8377	CR CC26/389
P5461.0D	THOMPSON DITCH	HILMA THOMPSON;	05/11/1903	IRR_SW	0.710	50	032N-108W-04-NENW	6711	CR CC20/059
P1042.0E	ENLARGED BURKHALTER DITCH	HILMA THOMPSON;	05/11/1903	IRR_SW	3.420	240	033N-108W-23-SWNW	6712	CR CC20/060
P1042.0E	ENLARGED BURKHALTER DITCH	HILMA BERG;	05/11/1903	IRR_SW	1.140	80	033N-108W-23-SWNW	17220	CR CC42/382
P1099.0E	ENLARGED BURKHALTER AND THOMPSON DITCH	STATE OF WYOMING;	06/04/1903	IRR_SW	1.070	75.36	033N-108W-23-SWNW		CR CC46/412
P1099.0E	ENLARGED BURKHALTER AND THOMPSON DITCH	GEORGE SANDLIN;	06/04/1903	IRR_SW	1.070	75.17	033N-108W-23-SWNW		CR CC46/413
P1099.0E	ENLARGED BURKHALTER AND THOMPSON DITCH	DOUGLAS SANDLIN;	06/04/1903	IRR_SW	3.980	279	033N-108W-23-SWNW		CR CC46/414
P1099.0E	ENLARGED BURKHALTER AND THOMPSON DITCH	MARY MOLISA SANDLIN;	06/04/1903	IRR_SW	4.140	290	033N-108W-23-SWNW		CR CC46/415
P1646.0E	ENLARGED BURKHALTER DITCH	CLAUDE ROOP;	12/18/1906	DOM_SW, IRR_SW	1.540	108	033N-108W-23-SWNW	20749	CR CC47/695
P1646.0E	ENLARGED BURKHALTER DITCH	FRANK ROOP;	12/18/1906	DOM_SW, IRR_SW	3.150	221	033N-108W-23-SWNW	20750	CR CC47/696
P1646.0E	ENLARGED BURKHALTER DITCH	LILLIAN HUGHES; BERTHA MAY LAMPE;	12/18/1906	IRR_SW, OTH	5.950	417	033N-108W-23-SWNW	16291	CR CC40/688
P11862.0D	JIM WILLIAMS DITCH	ESTATE OF W. ALVA THOMPSON;	06/02/1913	IRR_SW	2.130	149	033N-107W-03-	17219	CR CC42/381
P11886.0D	MCINTOSH DITCH	LEVI MCINTOSH;	06/16/1913	IRR_SW	0.510	36	032N-108W-09-NWNE	14651	CR CC38/297
P4030.0E	ENLARGED BOULDER CANAL	CLYDE GLASGOW;	10/14/1919	IRR_SW	1.540	108	033N-108W-23-SWNW	19207	CR CC45/214
P4030.0E	ENLARGED BOULDER CANAL	JNO. STEELE;	10/14/1919	IRR_SW	1.860	130	033N-108W-23-SWNW	20751	CR CC47/697
P4030.0E	ENLARGED BOULDER CANAL	ALBERT MERRELL;	10/14/1919	IRR_SW	1.140	80	033N-108W-23-SWNW	20752	CR CC47/698
P4030.0E	ENLARGED BOULDER CANAL	ERNEST MERRELL;	10/14/1919	IRR_SW	2.280	160	033N-108W-23-SWNW	20753	CR CC47/699
P4030.0E	ENLARGED BOULDER CANAL	BIRD BROTHERS;	10/14/1919	IRR_SW	4.550	319	033N-108W-23-SWNW	20754	CR CC47/700
P4030.0E	ENLARGED BOULDER CANAL	RALPH FRIESEN;	10/14/1919	IRR_SW	1.370	96.37	033N-108W-23-SWNW	21026	CR CC49/316
P4030.0E	ENLARGED BOULDER CANAL	C. FRIESEN;	10/14/1919	IRR_SW	2.280	160	033N-108W-23-SWNW	21027	CR CC49/317
P4030.0E	ENLARGED BOULDER CANAL	H A ROWE;	10/14/1919	IRR_SW, S&D	3.280	230	033N-108W-23-SWNW	21028	CR CC49/318
P4030.0E	ENLARGED BOULDER CANAL	R. SPRINGSTED;	10/14/1919	IRR_SW	1.040	73	033N-108W-23-SWNW	21546	CR CC52/272
P4030.0E	ENLARGED BOULDER CANAL	HARRY SANGER;	10/14/1919	IRR_SW	2.280	160	033N-108W-23-SWNW	21547	CR CC52/273
P4030.0E	ENLARGED BOULDER CANAL	NATIONAL LIVESTOCK COMPANY;	10/14/1919	IRR_SW	4.020	282	033N-108W-23-SWNW	21548	CR CC52/274
P4030.0E	ENLARGED BOULDER CANAL	ROY DITTON;	10/14/1919	IRR_SW	2.280	159.79	033N-108W-23-SWNW	19990	CR CC46/454
P4030.0E	ENLARGED BOULDER CANAL	J. SPRINGSTEAD AND SONS;	10/14/1919	IRR_SW	2.280	160	033N-108W-23-SWNW	19991	CR CC46/455
P4030.0E	ENLARGED BOULDER CANAL	DAN AND LOUIS SAMORA;	10/14/1919	IRR_SW	2.150	150.44	033N-108W-23-SWNW	24376	CR CC61/428
P4030.0E	ENLARGED BOULDER CANAL	PAUL DITTON;	10/14/1919	IRR_SW	0.310	22	033N-108W-23-SWNW	24338	CR CC61/390
P4030.0E	ENLARGED BOULDER CANAL	HOWARD ROUTH;	10/14/1919	IRR_SW	1.710	120	033N-108W-23-SWNW	23992	CR CC61/071
P4030.0E	ENLARGED BOULDER CANAL	WARD BALL;	10/14/1919	IRR_SW	1.140	80	033N-108W-23-SWNW	24085	CR CC61/171

Permit No.	Facility Name	Appropriator	Priority	Use	C.F.S/AF	Acres	HG LOC	Proof No.	CR No.
P4030.0E	ENLARGED BOULDER CANAL	FAY BARGER;	10/14/1919	IRR_SW	2.280	160	033N-108W-23-SWNW	23123	CR CC58/344
P4030.0E	ENLARGED BOULDER CANAL	FAY BARGER;	10/14/1919	IRR_SW	1.360	95.12	033N-108W-23-SWNW	22107	CR CC56/370
P4030.0E	ENLARGED BOULDER CANAL	ZEDA ROOP;	10/14/1919	IRR_SW	0.290	20	033N-108W-23-SWNW	25024	CR CC63/068
P4030.0E	ENLARGED BOULDER CANAL	MARCEL AND SYLVIA TRONQUET; STATE BOARD OF LAND COMMISSIONERS;	10/14/1919	IRR_SW	2.280	160	033N-108W-23-SWNW	26674	CR CC65/492
P4030.0E	ENLARGED BOULDER CANAL	JENSEN LAND AND LIVESTOCK COMPANY;	10/14/1919	IRR_SW	1.210	85	033N-108W-23-SWNW	25750	CR CC64/257
P4030.0E	ENLARGED BOULDER CANAL	DONALD AND META SPARKS;	10/14/1919	IRR_SW	1.140	80	033N-108W-23-SWNW	28274	CR CC68/210
P4030.0E	ENLARGED BOULDER CANAL	J. DIAMOND LAND AND LIVESTOCK COMPANY;	10/14/1919	IRR_SW	2.230	156.36	033N-108W-23-SWNW	28275	CR CC68/211
P4030.0E	ENLARGED BOULDER CANAL	LEO JENSEN;	10/14/1919	IRR_SW	0.400	28	033N-108W-23-SWNW	28276	CR CC68/212
P4030.0E	ENLARGED BOULDER CANAL	FLOYD E. AND MARGARET J. BOUSMAN;	10/14/1919	IRR_SW	4.000	280.5	033N-108W-23-SWNW	28277	CR CC68/213
P4030.0E	ENLARGED BOULDER CANAL	JOHN W. AND MARY K. JENSEN;	10/14/1919	IRR_SW	0.590	41	033N-108W-23-SWNW	33449	CR CC75/051
P4030.0E	ENLARGED BOULDER CANAL	KENNETH PERRY J;	10/14/1919	IRR_SW	0.860	60	033N-108W-23-SWNW	32229	CR CC73/076
P4030.0E	ENLARGED BOULDER CANAL	KENNETH PERRY J;	10/14/1919	IRR_SW	0.310	22	033N-108W-23-SWNW	32145	CR CC72/492
P4030.0E	ENLARGED BOULDER CANAL	LAZY RIVER RANCH, LLC;	10/14/1919	IRR_SW	0.240	17	033N-108W-23-SWNW	37304	CR CC81/175
P4030.0E	ENLARGED BOULDER CANAL	SHIRLEY JEAN SIMPSON; JEAN LAYOS; TYLER WILSON;	10/14/1919	IRR_SW	0.140	9.8	033N-108W-23-SWNW	36942	CR CC80/395
P4038.0R	BOULDER LAKE RESERVOIR	BOULDER IRRIGATION DISTRICT;	01/27/1927	IRR_SW	16207.000AF	0	033N-108W-11-SESE	21419	CR CR01/072
P5454.0E	ENLARGED BOULDER CANAL	V E AND HAROLD FALER;	03/11/1948	IRR_SW	1.410	99	033N-108W-23-SWNW	24377	CR CC61/429
P5480.0E	ENLARGED THOMPSON DITCH	ARTHUR MCINTOSH;	04/16/1949	IRR_SW, STO	0.550	38.8	032N-108W-04-NENW	24512	CR CC62/047
P21424.0D	ROUTH DITCH	BILLY LEE ROUTH;	08/31/1954	IRR_SW, STO	0.570	40	033N-108W-14-NENE	28652	CR CC68/273
P21424.0D	ROUTH DITCH	PEARL ROUTH;	08/31/1954	IRR_SW	3.440	241	033N-108W-14-NENE	28653	CR CC68/274
P21424.0D	ROUTH DITCH	NANCY JANE PLATT;	08/31/1954	IRR_SW	0.570	40	033N-108W-14-NENE	28654	CR CC68/275
P21424.0D	ROUTH DITCH	DONALD ROUTH;	08/31/1954	IRR_SW	2.400	168	033N-108W-14-NENE	28655	CR CC68/276
P21424.0D	ROUTH DITCH	WILLIAM HOWARD ROUTH;	08/31/1954	IRR_SW	2.980	209	033N-108W-14-NENE	28656	CR CC68/277
P6572.0R	ENLARGED BOULDER LAKE RESERVOIR	BOULDER IRRIGATION DISTRICT;	04/21/1961	DOM_SW, FIS, IND_SW, IRR_SW, MUN_SW, REC, STO, WL	6073.000AF	0	033N-108W-11-SESE	29260	CR CR05/361
P6749.0E	ENLARGED BOULDER CANAL	LARY LOZIER;	03/01/1984	IRR_SW	0.530	37	033N-108W-23-SWNW	33568	CR CC75/091
P6750.0E	ENLARGED BOULDER CANAL	J. THOMAS AND JANE H. JOHNSTON;	03/01/1984	IRR_SW	0.840	59	033N-108W-23-SWNW	33569	CR CC75/092
P6780.0E	ENLARGED BOULDER CANAL	WAYNE STEELE;	04/04/1985	IRR_SW	0.000	90.5	033N-108W-23-SWNW	34284	CR CC76/034
P7208.0E	ENLARGED BOULDER CANAL	JOHN F. AND SUSAN M. WELLS;	06/18/1997	IRR_SW	0.410	28.5	033N-108W-23-SWSW	38247	CR CC82/323

STANLEY SPRINGS, TRIBUTARIES OF BOULDER CREEK, WEST FORK NEW FORK RIVER, NEW FORK RIVER, GREEN RIVER

P22173.0D	STANLEY DITCH	STANLEY SLIZESKI;	10/17/1960	IRR_SW	0.370	26	033N-108W-22-SWNE	27190	CR CC66/316

LITTLE BURNT DRAW, TRIBUTARIES OF BOULDER CREEK, WEST FORK NEW FORK RIVER, NEW FORK RIVER, GREEN RIVER

P12084.0S	LITTLE BURNT LAKE STOCK RESERVOIR	MAIN PASS L.L.C. DBA FAYETTE RANCH;	06/27/1994	STO	11.700AF	0	033N-108W-15-SESW	38521	CR CR16/139
P12401.0R	FAYETTE RANCH WETLAND POND IX RESERVOIR	MAIN PASS LLC;	11/18/2002	WL	4.160AF	0	033N-108W-15-NWSW	41624	CR CR22/302
P12402.0R	FAYETTE RANCH WETLAND POND X RESERVOIR	MAIN PASS LLC;	11/18/2002	WL	1.660AF	0	033N-108W-15-NESW	41625	CR CR22/303

WISHBONE DRAW, TRIBUTARIES OF LITTLE BURNT DRAW, BOULDER CREEK, WEST FORK NEW FORK RIVER, NEW FORK RIVER, GREEN RIVER

P12083.0S	WISHBONE LAKE STOCK RESERVOIR	MAIN PASS L.L.C., DBA FAYETTE RANCH;	06/27/1994	STO	17.300AF	0	033N-108W-21-NENE	38520	CR CR16/138

DIVIDE CREEK, TRIBUTARIES OF BOULDER CREEK, WEST FORK NEW FORK RIVER, NEW FORK RIVER, GREEN RIVER

P5365.0R	DIVIDE RESERVOIR	J. VIBLE;	07/30/1934	DOM_SW, IRR_SW, STO	1027.360AF	0	033N-106W-14-NWNE	27936	CR CR03/477

Permit No.	Facility Name	Appropriator	Priority	Use	C.F.S/AF	Acres	HG LOC	Proof No.	CR No.
	POLE CREEK, TRIBUTARIES OF WEST FORK NEW FORK RIVER, NEW FORK RIVER, GREEN RIVER								
P2161.0D	POLE CREEK NO. 2 DITCH	MAIN PASS, LLC;	06/10/1899	FTH, RES	0.360	0	033N-108W-04-NENE	6490	CR CC89/103
P2160.0D	POLE CREEK NO. 1 DITCH	MAIN PASS, LLC;	06/10/1899	FTH, RES	0.160	0	033N-108W-04-SENE	4228	CR CC89/101
P12338.0R	FAYETTE RANCH WETLAND POND I RESERVOIR	MAIN PASS LLC;	06/10/1899	WL	14.350AF	0	033N-108W-17-NWNE	41626	CR CR22/304
P12339.0R	FAYETTE RANCH WETLAND POND II RESERVOIR	MAIN PASS LLC;	06/10/1899	WL	4.020AF	0	033N-108W-17-NWNE	41627	CR CR22/305
P12340.0R	FAYETTE RANCH WETLAND POND III RESERVOIR	MAIN PASS LLC;	06/10/1899	WL	14.490AF	0	033N-108W-17-NWNE	41628	CR CR22/306
P12341.0R	FAYETTE RANCH WETLAND POND IV RESERVOIR	MAIN PASS LLC;	06/10/1899	WL	9.950AF	0	033N-108W-08-SWSE	41629	CR CR22/307
P12342.0R	FAYETTE RANCH WETLAND POND V RESERVOIR	MAIN PASS LLC;	06/10/1899	WL	7.060AF	0	033N-108W-08-SESE	41630	CR CR22/308
P12343.0R	FAYETTE RANCH WETLAND POND VI RESERVOIR	MAIN PASS LLC;	06/10/1899	WL	19.570AF	0	033N-108W-08-SWSE	41631	CR CR22/309
P2160.0D	POLE CREEK NO. 1 DITCH	F. FISHER;	06/10/1899	IRR_SW	1.140	80	033N-108W-04-SENE	4229	CR CA03/086
P2160.0D	POLE CREEK NO. 1 DITCH	CORDELIA HELEN FISHER;	06/10/1899	IRR_SW	4.060	284.2	033N-108W-04-SENE	4228	CR CB03/085
P2160.0D	POLE CREEK NO. 1 DITCH	F. FISHER;	06/10/1899	IRR_SW	0.570	40	033N-108W-04-SENE	11228	CR CC32/396
P2161.0D	POLE CREEK NO. 2 DITCH	FREDERICK CLIFFORD FISHER ET AL;	06/10/1899	IRR_SW	21.780	1525.33	033N-108W-04-NENE	6490	CR CC17/078
P8425.0D	HALF MOON DITCH	FAYETTE LAND AND CO.;	05/18/1908	IRR_SW	2.970	207.9	034N-108W-34-NWSE	17218	CR CC42/380
P1875.0E	ENLARGED POLE CREEK NO. 2 DITCH	FRED EKLUND;	05/21/1908	IRR_SW, STKNDMS	0.780	55	033N-108W-04-NENE		CR CC58/162
P8426.0D	STADIN NO. 1 DITCH	FRANK DAWSON;	05/21/1908	IRR_SW	1.840	129	033N-108W-30-SENE	9967	CR CC30/127
P1875.0E	ENLARGED POLE CREEK NO. 2 DITCH	ROSA STROUS;	05/21/1908	IRR_SW	0.570	40	033N-108W-04-NENE	10870	CR CC32/024
P1875.0E	ENLARGED POLE CREEK NO. 2 DITCH	HENRY STROUS;	05/21/1908	IRR_SW, S&D	0.970	67.66	033N-108W-04-NENE	10871	CR CC32/025
P8426.0D	STADIN NO. 1 DITCH	ADELINE BROSMAN;	05/21/1908	IRR_SW	2.510	176	033N-108W-30-SENE	14659	CR CC38/305
P8427.0D	STADIN NO. 2 DITCH	ADELINE BROSMAN;	05/21/1909	IRR_SW	1.180	83	033N-108W-31-NWNE	10869	CR CC32/023
P10855.0D	J T ORCUTT DITCH	T A BROSMAN;	05/12/1911	IRR_SW	2.000	140	033N-108W-31-SENE	14660	CR CC38/306
P12577.0D	OLIVER ORCUTT DITCH	ADELINE BROSSMAN;	07/27/1914	IRR_SW	1.440	101	033N-108W-31-SENE	15233	CR CC39/273
P3593.0E	ENLARGED J T ORCUTT DITCH	OLIVER ORCUTT;	09/24/1915	IRR_SW	0.090	6	033N-108W-31-SENE	15234	CR CC39/274
P4068.0E	ENLARGED J T ORCUTT DITCH	T A BROSMAN;	10/30/1919	IRR_SW	2.230	156	033N-108W-31-SENE	18246	CR CC43/703
P17370.0D	BLACK DITCH	ESTATE OF LEVI D. BLACK;	05/16/1928	IRR_SW	1.450	104	034N-108W-23-SESE	20317	CR CC47/250
	AIRPORT SLOUGH DRAW, TRIBUTARIES OF POLE CREEK, WEST FORK NEW FORK RIVER, NEW FORK RIVER, GREEN RIVER								
P23626.0D	AIRPORT DITCH	CHRISTMANN CORPORATION;	09/29/1970	IRR_SW	2.550	179	033N-109W-25-NESE	30077	CR CC70/203
	ALMQUIST SWALE, TRIBUTARIES OF AIRPORT SLOUGH DRAW, POLE CREEK, WEST FORK NEW FORK RIVER, NEW FORK RIVER, GREEN RIVER								
P17650.0S	BRIDGETTE WATER HOLE STOCK RESERVOIR	PHILLIP W AND AMY S BELVEAL;	03/14/2005	STO	0.490AF	0	033N-109W-25-NENW	40934	CR CR21/031
P17425.0S	ALMQUIST STOCK RESERVOIR	MARY ANNE ALMQUIST LIVING TRUST;	04/11/2005	STO	0.960AF	0	033N-109W-24-SWNW	40018	CR CR18/220
	FOWLER DRAW, TRIBUTARIES OF POLE CREEK, WEST FORK NEW FORK RIVER, NEW FORK RIVER, GREEN RIVER								
P5369.0S	CARMICHAEL NO. 1 STOCK RESERVOIR	W. CARMICHAEL;	08/16/1965	STO	2.220AF	0	033N-108W-19-NWSW	27937	CR CR03/478
	FALL CREEK, TRIBUTARIES OF POLE CREEK, WEST FORK NEW FORK RIVER, NEW FORK RIVER, GREEN RIVER								
P12353.0R	MAIN PASS NO. 3 RESERVOIR	MAIN PASS LLC;	06/10/1899	WL	10.410AF	0	033N-108W-10-NESW	41632	CR CR22/310
P3301.0D	FALL CREEK NO. 2 DITCH	MAIN PASS, LLC;	07/03/1901	FTH, RES	0.330	0	033N-108W-03-SESE	4230	CR CC89/102
P3300.0D	FALL CREEK NO. 1 DITCH ACT FAYETTE CANAL	FRED FISHER;	07/03/1901	IRR_SW	0.570	40	033N-108W-02-NWSW	5525	CR CC07/036
P3301.0D	FALL CREEK NO. 2 DITCH	FRED FISHER;	07/03/1901	IRR_SW	1.100 ORI SUP	77 364.2	033N-108W-03-SESE	5526	CR CC07/037
P3301.0D	FALL CREEK NO. 2 DITCH	BETSY DIGGINS BRAINARD;	07/03/1901	IRR_SW	3.890	272.6	033N-108W-03-SESE	4230	CR CB03/086
P7496.0D	FAYETTE CANAL	ROBERT MCBRIDE; GRACE MCBRIDE;	06/22/1906	IRR_SW	0.700	49	033N-108W-02-NWSW	28278	CR CC68/214

Permit No.	Facility Name	Appropriator	Priority	Use	C.F.S/AF	Acres	HG LOC	Proof No.	CR No.
P7496.0D	FAYETTE CANAL	MAIN PASS, LLC;	06/22/1906	FTH, RES	0.050	0	033N-108W-02-NWSW	24240	CR CC89/104
P7496.0D	FAYETTE CANAL	MAIN PASS, LLC;	06/22/1906	FTH, RES	0.020	0	033N-108W-02-NWSW	28278	CR CC89/100
P7496.0D	FAYETTE CANAL	MAIN PASS, LLC;	06/22/1906	FTH, RES	0.060	0	033N-108W-02-NWSW	24240	CR CC89/099
P12336.0R	FAYETTE RANCH WETLAND POND VIII - A RESERVOIR	MAIN PASS LLC;	06/22/1906	WL	5.760AF	0	033N-108W-10-SESW	41634	CR CR22/312
P12337.0R	FAYETTE RANCH WETLAND POND VIII - B RESERVOIR	MAIN PASS LLC;	06/22/1906	WL	2.330AF	0	033N-108W-10-SESW	41635	CR CR22/313
P7496.0D	FAYETTE CANAL	ROBERT MCBRIDE; GRACE MCBRIDE;	06/22/1906	IRR_SW	0.470	32.7	033N-108W-02-NWSW	24240	CR CC61/302
P7496.0D	FAYETTE CANAL	GEORGE DENISE;	06/22/1906	IRR_SW	5.070	355	033N-108W-02-NWSW	14661	CR CC38/307
P7496.0D	FAYETTE CANAL	J. HENDRICKS;	06/22/1906	IRR_SW	4.140	290	033N-108W-02-NWSW	14662	CR CC38/308
P7496.0D	FAYETTE CANAL	OBADIAH DENISE;	06/22/1906	IRR_SW	4.000	280	033N-108W-02-NWSW	12207	CR CC34/398
P7496.0D	FAYETTE CANAL	KATHRINE DENISE;	06/22/1906	IRR_SW	8.370	586	033N-108W-02-NWSW	12208	CR CC34/399
P5637.0E	ENLARGED FAYETTE CANAL	MAIN PASS, LLC;	08/11/1952	FTH, RES	0.060	0	033N-108W-02-SWSW	31465	CR CC89/105
P5637.0E	ENLARGED FAYETTE CANAL	FAY AND ANNE BARGER;	08/11/1952	IRR_SW	5.150	361	033N-108W-02-NWSW	27423	CR CC67/033
P5637.0E	ENLARGED FAYETTE CANAL	CHARLES DONALD CHRISTMAN 1984 TRUST;	08/11/1952	IRR_SW, STO	2.020	141.35	033N-108W-02-NWSW		CR CC82/174
P7298.0E	ENLARGED FAYETTE CANAL	MAIN PASS LLC, DBA FAYETTE RANCH;	12/04/1998	IRR_SW	0.240	16.74	033N-108W-02-SWNE	38513	CR CC83/069
P7463.0E	ENLARGED FAYETTE CANAL	MAIN PASS LLC;	02/02/2006	RES	0.000	0	033N-108W-02-SWSW	41594	CR CC93/265
	BOELTE DRAW, TRIBUTARIES OF FALL CREEK, POLE CREEK, WEST FORK NEW FORK RIVER, NEW FORK RIVER, GREEN RIVER								
P12456.0R	BOELTE NO. 1 RESERVOIR	MAIN PASS LLC;	06/22/1906	WL	48.880AF	0	033N-108W-10-NESE	41636	CR CR22/314
	NORTH SPRINGS DRAW, TRIBUTARIES OF FALL CREEK, POLE CREEK, WEST FORK NEW FORK RIVER, NEW FORK RIVER, GREEN RIVER								
P13593.0R	BOELTE NO. 2 RESERVOIR	MAIN PASS LLC;	02/01/2010	WL	16.290AF	0	033N-108W-10-SENE	41637	CR CR22/315
	BURNT LAKE, TRIBUTARIES OF FALL CREEK, POLE CREEK, WEST FORK NEW FORK RIVER, NEW FORK RIVER, GREEN RIVER								
P29352.0D	SKINNER BROTHERS PIPELINE	SKINNER BROTHERS, INCORPORATED; USDA, FOREST SERVICE;	11/28/1984	DOM_SW	0.120	0	034N-107W-31-	37396	CR CC81/230
	HIDDEN VALLEY CREEK, TRIBUTARIES OF POLE CREEK, WEST FORK NEW FORK RIVER, NEW FORK RIVER, GREEN RIVER								
P12392.0R	HIDDEN VALLEY RESERVOIR	MAIN PASS LLC;	11/03/2005	WL	5.330AF	0	033N-108W-04-NENE	41633	CR CR22/311
	HALF MOON LAKE, TRIBUTARIES OF POLE CREEK, WEST FORK NEW FORK RIVER, NEW FORK RIVER, GREEN RIVER								
P27906.0D	PONDEROSA PIPELINE	GARY W. AND SUE L. WEISS;	10/07/1980	MIS_SW	0.056	0	034N-108W-10-	34285	CR CC76/035
P31334.0D	QUEALY PIPELINE NO. 1	LP ENTERPRISES;	07/25/1994	DOM_SW	0.056	0	034N-108W-08-	37794	CR CC81/471
P31335.0D	QUEALY PIPELINE NO 2	LP ENTERPRISES;	07/25/1994	DOM_SW	0.056	0	034N-108W-08-	37795	CR CC81/472
	UNNAMED SPRINGS NO. 1&2, TRIBUTARIES OF HALF MOON LAKE, POLE CREEK, WEST FORK NEW FORK RIVER, NEW FORK RIVER, GREEN RIVER								
P19498.0D	HALF MOON PICNIC WATER SUPPLY SYSTEM	UNITED STATES OF AMERICA, FOREST SERVICE;	07/01/1940	DOM_SW	0.002	0	034N-108W-10-	25250	CR CC63/282
P19499.0D	HALF MOON PICNIC WATER SUPPLY SYSTEM PIPELINE	UNITED STATES OF AMERICA, FOREST SERVICE;	01/18/1941	REC	0.002	0	034N-108W-10-	25347	CR CC63/392
	OLD CANOE CREEK, TRIBUTARIES OF HALF MOON LAKE, POLE CREEK, WEST FORK NEW FORK RIVER, NEW FORK RIVER, GREEN RIVER								
P10786.0R	OLD CANOE RESERVOIR	USDA FOREST SERVICE;	08/07/1998	FIS, WL	4.200AF	0	034N-108W-10-	38601	CR CR16/187

Permit No	Facility Name	Appropriator	Priority	Use	C.F.S/AF	Acres	HG LOC	Proof No.	CR No
	SURVEYOR CREEK, TRIBUTARIES OF HALF MOON LAKE, POLE CREEK, WEST FORK NEW FORK RIVER, NEW FORK RIVER, GREEN RIVER								
P17269.0D	SURVEYOR DITCH	HALF MOON LODGE;	09/14/1927	IRR_SW	5.580	391	034N-108W-08-NENE	20075	CR CC46/556
	QUEALY SPRING, TRIBUTARIES OF SURVEYOR CREEK, HALF MOON LAKE, POLE CREEK, WEST FORK NEW FORK RIVER, NEW FORK RIVER, GREEN RIVER								
P31677.0D	QUEALY NO. 3 PIPELINE	LP ENTERPRISES;	12/01/1995	IRR_SW	0.000	6	034N-108W-05-SWSE	37796	CR CC81/473
	PARK CREEK, TRIBUTARIES OF SURVEYOR CREEK, HALF MOON LAKE, POLE CREEK, WEST FORK NEW FORK RIVER, NEW FORK RIVER, GREEN RIVER								
P10559.0R	PARK CREEK RESERVOIR	WIND RIVER RESORTS;	12/20/1996	FIR, IND_SW	1.520AF	0	035N-108W-28-NWNW	38258	CR CR15/388
	CRANDALL DRAW, TRIBUTARIES OF WEST FORK NEW FORK RIVER, NEW FORK RIVER, GREEN RIVER								
P22605.0D	HAGENSTEIN EAST DITCH	PAUL HAGENSTEIN;	04/01/1965	IRR_SW	0.000	160	033N-109W-14-SWNE	32652	CR CC73/355
P22605.0D	HAGENSTEIN EAST DITCH	PAUL HAGENSTEIN; BETTE ANN HAGENSTEIN;	04/01/1965	IRR_SW	0.000	199.81	033N-109W-14-SWNE	27906	CR CC67/319
P22609.0D	RILINGER DITCH	FELIX RILINGER;	04/01/1965	IRR_SW	0.000	219.1	033N-109W-23-SWSE	27907	CR CC67/320
P22606.0D	HAGENSTEIN WEST DITCH	PAUL HAGENSTEIN; BETTE ANN HAGENSTEIN;	04/01/1965	IRR_SW	0.000	34	033N-109W-14-SWSE	27908	CR CC67/321
P22605.0D	HAGENSTEIN EAST DITCH	MARJORIE HAGENSTEIN;	04/01/1965	IRR_SW	0.000	46	033N-109W-14-SWNE	28110	CR CC68/064
P22606.0D	HAGENSTEIN WEST DITCH	MARJORIE HAGENSTEIN;	04/01/1965	IRR_SW	0.000	394	033N-109W-14-SWSE	28111	CR CC68/065
P23060.0D	B AND L DITCH	JAMES WELLS; PAUL ALLEN;	07/22/1966	IRR_SW	0.650 ORI SUP	42 37.69	033N-109W-11-SESE	29253	CR CC69/295
	SNYDER SPRING, TRIBUTARIES OF SNYDER SPRING DRAW, DENNEY DRAW, CRANDALL DRAW, WEST FORK NEW FORK RIVER, NEW FORK RIVER, GREEN RIVER								
P13091.0S	SNYDER STOCK RESERVOIR	DARRELL SNYDER;	02/04/1999	STO	0.080AF	0	033N-109W-12-NENW	38257	CR CR15/387
	DENNEY DRAW, TRIBUTARIES OF CRANDALL DRAW, WEST FORK NEW FORK RIVER, NEW FORK RIVER, GREEN RIVER								
P11778.0S	DENNEY STOCK RESERVOIR	MIKE DENNEY;	06/30/1993	STO	0.480AF	0	033N-109W-01-NESE	36443	CR CR13/353
	WILLOW SPRING, TRIBUTARIES OF WEST FORK NEW FORK RIVER, NEW FORK RIVER, GREEN RIVER								
P11741.0R	DEER HAVEN RESERVOIR	MICHAEL D. AND DEBORAH JANE VICKREY;	11/03/2003	STO	0.350AF	0	033N-109W-04-SWSW	40014	CR CR18/216
	RUMPLER DRAW, TRIBUTARIES OF WEST FORK NEW FORK RIVER, NEW FORK RIVER, GREEN RIVER								
P30108.0D	RUMPLER DIVERSION	WARD V. AND MARY LOU RUMPLER;	07/21/1988	IRR_SW	0.000	10	033N-109W-26-SWNE	35739	CR CC78/195
	BOBBY DRAW, TRIBUTARIES OF WEST FORK NEW FORK RIVER, NEW FORK RIVER, GREEN RIVER								
P10685.0R	BOBBY RESERVOIR	TOM ROSSETTER;	10/06/1997	FIS, WL	5.900AF	0	033N-109W-26-NWNW	38046	CR CR15/297
	PINE CREEK, TRIBUTARIES OF WEST FORK NEW FORK RIVER, NEW FORK RIVER, GREEN RIVER								
P1696.0D	LEE DITCH	R. O. GRAHAM;	01/04/1898	IRR_SW	0.710	49.82	034N-109W-28-SESE	4224	CR CB03/083
P1696.0D	LEE DITCH	R. GRAHAM;	01/04/1898	IRR_SW	0.360	26	034N-109W-28-SESE	5410	CR CC10/025

Permit No.	Facility Name	Appropriator	Priority	Use	C F.S/AF	Acres	HG LOC	Proof No.	CR No
P1817.0D	COLORADO DITCH ACT PINEDALE WATER SUPPLY PIPELINE	TOWN OF PINEDALE;	05/06/1898	MUN_SW	1.600	0	034N-109W-23-SWNW		CR CC81/136
P1817.0D	COLORADO DITCH	DAVID MCCOY;	05/06/1898	IRR_SW	6.430	449.94	034N-109W-28-SESE	4225	CR CA03/084
P1817.0D	COLORADO DITCH ACT PINEDALE WATER SUPPLY PIPELINE	TOWN OF PINEDALE;	05/06/1898	MUN_SW	0.370	0	034N-109W-23-SWNW		CR CC75/289
P392.0E	ENLARGED LEE DITCH ACT PINEDALE WATER SUPPLY PIPELINE	TOWN OF PINEDALE;	12/01/1898	MUN_SW	0.110	0	034N-109W-23-SWNW		CR CC75/290
P392.0E	ENLARGED LEE DITCH ACIPT K BAR B PUMP NO. 1	R O GRAHAM; CHARLES PETERSON;	12/01/1898	IRR_SW	3.500	245	034N-109W-28-SESE	4226	CR CB03/084
P402.0E	ENLARGED COLORADO DITCH	KATHERINE HILL;	02/09/1899	IRR_SW	3.330	236.03	034N-109W-28-SESE	4227	CR CA03/085
P626.0E	ENLARGED LEE DITCH (PINE CREEK CANAL NO. 1) ACT PINEDALE WATER SUPPLY PIPELINE	TOWN OF PINEDALE;	02/25/1901	MUN_SW	0.120	0	034N-109W-23-SWNW		CR CC75/291
P626.0E	ENLARGED LEE DITCH (PINE CREEK CANAL NO. 1)	J H SWEENEY;	02/25/1901	IRR_SW	8.480	593.35	034N-109W-28-SESE	5490	CR CC07/001
P626.0E	ENLARGED LEE DITCH (PINE CREEK CANAL NO. 1)	WILLIAM M FENN AND LAURA J FENN REVOCABLE TRUSTS;	02/25/1901	RES	0.070	0	034N-109W-28-SESE	5490	CR CC90/076
P626.0E	ENLARGED LEE DITCH (PINE CREEK CANAL NO. 1)	P F TRACY;	02/25/1901	IRR_SW	7.240	507	034N-109W-28-SESE	5488	CR CC16/015
P626.0E	ENLARGED LEE DITCH (PINE CREEK CANAL NO. 1)	P TRACY;	02/25/1901		8.340		034N-109W-28-SESE	5488	CR CC10/024
P626.0E	ENLARGED LEE DITCH (PINE CREEK CANAL NO. 1)	HARRY CANTLIN;	02/25/1901	IRR_SW	4.550	318.79	034N-109W-28-SESE	6713	CR CC20/061
P626.0E	ENLARGED LEE DITCH (PINE CREEK CANAL NO. 1)	THOMAS WILTSIE;	02/25/1901	IRR_SW	0.540	38	034N-109W-28-SESE	6714	CR CC20/062
P626.0E	ENLARGED LEE DITCH (PINE CREEK CANAL NO. 1)	ALICE CANTLIN;	02/25/1901	IRR_SW	3.300	231.03	034N-109W-28-SESE	5485	CR CC06/098
P626.0E	ENLARGED LEE DITCH (PINE CREEK CANAL NO. 1)	C O GELLER;	02/25/1901	IRR_SW	6.270	440	034N-109W-28-SESE	5486	CR CC06/099
P626.0E	ENLARGED LEE DITCH (PINE CREEK CANAL NO. 1)	THOMAS WILTSIE;	02/25/1901	IRR_SW	6.370	447.1	034N-109W-28-SESE	5487	CR CC06/100
P626.0E	ENLARGED LEE DITCH (PINE CREEK CANAL NO. 1)	R P O'NEIL;	02/25/1901	IRR_SW	2.620	183.71	034N-109W-28-SESE	5489	CR CC06/101
P692.0E	ENLARGED LEE DITCH (PINE CREEK CANAL NO. 1) ACIPT RICHARDSON SPRINKLER SYSTEM	ALICE CANTLIN;	08/05/1901	IRR_SW	0.820	57.29	034N-109W-28-SESE	5491	CR CC07/002
P3805.0D	MCDOWELL DITCH	THOMAS BOURM;	03/31/1902	IRR_SW	0.570	40	033N-109W-04-NESE	6715	CR CC20/063
P3805.0D	MCDOWELL DITCH	ALBERT BAYER;	03/31/1902	IRR_SW	1.220	85.3	033N-109W-04-NESE	6716	CR CC20/066
P1091.0E	ENLARGED MCDOWELL DITCH	THOMAS BOURM;	07/06/1903	IRR_SW	1.780	125	033N-109W-04-NESE	6717	CR CC20/067
P1091.0E	ENLARGED MCDOWELL DITCH	PAULINA BAYER;	07/06/1903	IRR_SW	0.340	24	033N-109W-04-NESE	6718	CR CC20/068
P6432.0D	HANSEN-LUCE DITCH	JOSEPH HANSEN;	12/21/1904	IRR_SW	1.150	81	034N-109W-27-SENW	6719	CR CC20/069
P1631.0E	ENLARGED COLORADO DITCH	WILLIAM SHANLEY;	11/08/1906	IRR_SW	0.990	69	034N-109W-28-SESE	8383	CR CC26/393
P1631.0E	ENLARGED COLORADO DITCH ACT PINEDALE WATER SUPPLY PIPELINE)	TOWN OF PINEDALE;	11/08/1906	MUN_SW	0.070	0	034N-109W-23-SWNW		CR CC75/292
P1631.0E	ENLARGED COLORADO DITCH ACT PINEDALE WATER SUPPLY PIPELINE)	TOWN OF PINEDALE;	11/08/1906	MUN_SW	1.510	0	034N-109W-23-SWNW		CR CC81/137
P8238.0D	HIGHLAND CANAL	WOODROW L. AND DORTH E. NELSON;	02/21/1908	IRR_SW	0.290	20	034N-109W-23-NWSW	32653	CR CC73/356
P8238.0D	HIGHLAND CANAL	HIGHLAND IRRIGATION DISTRICT,;	02/21/1908	IRR_SW	0.590	41.34	034N-109W-23-NWSW	32654	CR CC73/357
P8238.0D	HIGHLAND CANAL	ORVAL JAMES;	02/21/1908	IRR_SW	1.370	96	034N-109W-23-NWSW	29011	CR CC69/178
P8238.0D	HIGHLAND CANAL	MERLE A. AND GAIL ANNE THOMAS;	02/21/1908	IRR_SW	0.570	40	034N-109W-23-NWSW	29012	CR CC69/179
P8238.0D	HIGHLAND CANAL	JAMES WELLS; PAUL ALLEN;	02/21/1908	IRR_SW	0.560	39	034N-109W-23-NWSW	29013	CR CC69/180
P8238.0D	HIGHLAND CANAL	W R AND BERNICE CARMICHAEL;	02/21/1908	IRR_SW	2.570	179.69	034N-109W-23-NWSW	27424	CR CC67/034
P8238.0D	HIGHLAND CANAL	JOANNE FELTNER;	02/21/1908	IRR_SW	2.280	160	034N-109W-23-NWSW	27425	CR CC67/035
P8238.0D	HIGHLAND CANAL	WAYNE FELTNER;	02/21/1908	IRR_SW	2.450	172	034N-109W-23-NWSW	27322	CR CC66/472
P8238.0D	HIGHLAND CANAL	JOHN CHRISTMANN; JACK MARKHAM;	02/21/1908	IRR_SW	2.020	142	034N-109W-23-NWSW	27027	CR CC66/197
P8238.0D	HIGHLAND CANAL	GLEN CREWS; NELLIE CREWS;	02/21/1908	IRR_SW	0.940	66	034N-109W-23-NWSW	27028	CR CC66/198
P8238.0D	HIGHLAND CANAL	ANGELINE FELTNER;	02/21/1908	IRR_SW	2.260	158	034N-109W-23-NWSW	23124	CR CC58/345
P8238.0D	HIGHLAND CANAL	MAUD THOMPSON; THELMA KLEIN;	02/21/1908	IRR_SW	1.530	107	034N-109W-23-NWSW	23125	CR CC58/346
P8238.0D	HIGHLAND CANAL	C. FELTNER;	02/21/1908	IRR_SW	2.280	160	034N-109W-23-NWSW	22893	CR CC58/151
P8238.0D	HIGHLAND CANAL	VICTOR JOHN FACINELLI; THOMAS FACINELLI;	02/21/1908	IRR_SW	5.300	370.81	034N-109W-23-NWSW	25395	CR CC63/435
P8238.0D	HIGHLAND CANAL	GEORGE AUSTIN; EVELYN AUSTIN;	02/21/1908	IRR_SW	4.000	280	034N-109W-23-NWSW	25176	CR CC63/216
P8238.0D	HIGHLAND CANAL	C. FELTNER; ANGELINE FELTNER;	02/21/1908	IRR_SW	3.130	219	034N-109W-23-NWSW	25177	CR CC63/217

Permit No.	Facility Name	Appropriator	Priority	Use	C.F.S/AF	Acres	HG LOC	Proof No.	CR No.
P8238.0D	HIGHLAND CANAL	REED SCHWAB;	02/21/1908	IRR_SW	3.920	274.009	034N-109W-23-NWSW	25178	CR CC63/218
P8238.0D	HIGHLAND CANAL	WAYNE P AND BESSIE SCHWAB;	02/21/1908	IRR_SW	4.000	279.8	034N-109W-23-NWSW	25179	CR CC63/219
P8238.0D	HIGHLAND CANAL	ALFRED ANDERSON;	02/21/1908	IRR_SW	1.050	73.47	034N-109W-23-NWSW	24876	CR CC62/433
P8238.0D	HIGHLAND CANAL	C. FELTNER;	02/21/1908	IRR_SW	0.500	35	034N-109W-23-NWSW	24877	CR CC62/434
P8238.0D	HIGHLAND CANAL	STATE BOARD OF LAND COMMISSIONERS; C. C. FELTNER;	02/21/1908	IRR_SW	4.510	316	034N-109W-23-NWSW	24878	CR CC62/435
P8238.0D	HIGHLAND CANAL	C. C. AND ANGELINE FELTNER;	02/21/1908	IRR_SW	7.780	544.54	034N-109W-23-NWSW	24879	CR CC62/436
P8238.0D	HIGHLAND CANAL	CHARLES AINSWORTH; SYLVIA AINSWORTH;	02/21/1908	IRR_SW	5.900	413	034N-109W-23-NWSW	26675	CR CC65/493
P8238.0D	HIGHLAND CANAL	VICTOR FACINELLI;	02/21/1908	IRR_SW	4.900	342.99	034N-109W-23-NWSW	26798	CR CC66/072
P8238.0D	HIGHLAND CANAL	W. MANN;	02/21/1908	IRR_SW	1.660	116.32	034N-109W-23-NWSW	20318	CR CC47/251
P8238.0D	HIGHLAND CANAL	D. CARSON;	02/21/1908	IRR_SW	1.930	105	034N-109W-23-NWSW	20319	CR CC47/252
P8238.0D	HIGHLAND CANAL	BESSIE LEE DOYLE;	02/21/1908	IRR_SW	0.480	33.91	034N-109W-23-NWSW	20403	CR CC47/350
P8238.0D	HIGHLAND CANAL	D. B. DOYLE;	02/21/1908	IRR_SW	2.270	158.96	034N-109W-23-NWSW	20404	CR CC47/351
P8238.0D	HIGHLAND CANAL	J. BRAZIL;	02/21/1908	IRR_SW	2.070	145	034N-109W-23-NWSW	21029	CR CC49/319
P2038.0E	ENLARGED LEE DITCH (PINE CREEK CANAL NO. 1)	NELLIE HOFF;	05/13/1909	IRR_SW	1.710	119.64	034N-109W-28-SESE	9966	CR CC30/126
P2136.0E	ENLARGED HANSEN LUCE DITCH	CHARLES BAYER;	12/07/1909	IRR_SW	1.060	74	034N-109W-27-SWNE	12209	CR CC34/400
P16559.0D	BEST FLUME DITCH	PINEDALE POWER AND LIGHT COMPANY;	02/24/1923	POW	22.500	0	034N-109W-27-NWNE	22110	CR CC56/373
P4430.0E	ENLARGED BEST FLUME DITCH	PINEDALE POWER AND LIGHT COMPANY;	12/10/1924	HYD	31.250	0	034N-109W-27-NWNE	22108	CR CC56/371
P4452.0R	FREMONT LAKE RESERVOIR	TOWN OF PINEDALE, WYOMING;	09/10/1931	FIS, IND_SW, IRR_SW, MAN, MUN_SW, POW, REC	9844.120AF	0	034N-109W-23-SWNW	26680	CR CR02/396
P4453.0R	FREMONT LAKE RESERVOIR	FREMONT LAKE RESERVOIR ASSOCIATION;	09/15/1931	FIS, IRR_SW	5377.920AF	0	034N-109W-23-SWNW	21558	CR CR01/080
P17990.0D	WILLOW ISLAND DITCH	WILLIAM BAYER;	10/08/1931	IRR_SW	0.370	25.8	034N-109W-27-SENW	20893	CR CC49/112
P4465.0R	ENLARGED FREMONT LAKE RESERVOIR	FREMONT LAKE RESERVOIR ASSOCIATION;	11/20/1931	DOM_SW, FIS, IRR_SW, STO	5385.400AF	0	034N-109W-23-SWNW	21559	CR CR01/081
P18601.0D	PINEDALE WATER SUPPLY PIPE LINE	TOWN OF PINEDALE, WYOMING;	01/30/1935	DOM_SW	0.170	0	034N-109W-23-SWNW	23429	CR CC59/291
P18628.0D	FARMSTEAD DITCH	Mrs JAY RUTH MOLLRING;	09/16/1935	IRR_SW	0.090	6	034N-109W-27-SWNE	22449	CR CC57/199
P18627.0D	TERRACE DITCH	Mrs JAY RUTH MOLLRING;	09/16/1935	IRR_SW	0.030	2.4	034N-109W-27-SWNE	22450	CR CC57/200
P18756.0D	ORCUTT DITCH	THOMAS ORCUTT;	01/05/1937	IRR_SW	0.370	26	034N-109W-28-SESE	22109	CR CC56/372
P5289.0E	ENLARGED PINEDALE WATER SUPPLY PIPELINE	TOWN OF PINEDALE;	01/02/1941	MUN_SW	1.750	0	034N-109W-23-SWNW	23430	CR CC59/292
P5361.0E	ENLARGED HIGHLAND CANAL	ORVAL JAMES;	01/12/1944	IRR_SW	1.200	84	034N-109W-23-NWSW	29014	CR CC69/181
P5361.0E	ENLARGED HIGHLAND CANAL	STATE BOARD OF LAND COMMISSIONERS; ANDREW A AND ANNA MAE HARROWER;	01/12/1944	IRR_SW, STO	2.120	148.22	034N-109W-23-NWSW	30648	CR CC71/332
P5406.0E	ENLARGED COLORADO DITCH	ELTON COOLEY;	06/26/1945	IRR_SW, STO	1.030	71.98	034N-109W-28-SESE	24086	CR CC61/172
P5484.0E	ENLARGED LEE DITCH (PINE CREEK CANAL NO. 1)	JOHN BRAZZILL;	07/15/1949	DOM_SW, IRR_SW, STO	1.630	135	034N-109W-28-SESE	26400	CR CC65/312
P5484.0E	ENLARGED LEE DITCH (PINE CREEK CANAL NO. 1)	PAUL C AND BETTE ANN HAGENSTEIN;	07/15/1949	DOM_SW, IRR_SW, STO	0.690	48.16	034N-109W-28-SESE	27909	CR CC67/322
P5484.0E	ENLARGED LEE DITCH (PINE CREEK INSTREAM FLOW SEGMENT NO. 1)	STATE OF WYOMING, GAME AND FISH COMMISSION;	07/15/1949	ISF	0.640	0	034N-109W-28-SESE	27909	CR CC92/048
P5503.0E	ENLARGED HIGHLAND CANAL	JOHN CHRISTMANN; JACK MARKHAM;	03/13/1950	IRR_SW, STO	0.530	37	034N-109W-23-NWSW	27029	CR CC66/199
P5503.0E	ENLARGED HIGHLAND CANAL	WAYNE FELTNER;	03/13/1950	IRR_SW, STO	4.850	340	034N-109W-23-NWSW	27323	CR CC66/473
P5503.0E	ENLARGED HIGHLAND CANAL	CHARLES AND SYLVIA AINSWORTH;	03/13/1950	IRR_SW, STO	0.870	61	034N-109W-23-NWSW	26676	CR CC65/494
P21373.0D	FREMONT DITCH	FRED E. AND ERMA D. SHRIVER;	03/02/1954	IRR_SW	3.540	248	034N-109W-23-NWSW	30078	CR CC70/204
P21373.0D	FREMONT DITCH	ROBERT W. AND RUTH E. WILSON;	03/02/1954	IRR_SW	3.230	226	034N-109W-23-NWSW	30079	CR CC70/205
P21833.0D	WILLOW ISLAND NO. 2 DITCH	WILLIAM BAYER;	01/17/1957	IRR_SW	0.160	10.9	034N-109W-27-SWNE	26137	CR CC65/082
P6388.0E	ENLARGED FREMONT DITCH	FRED SHRIVER;	05/25/1971	IRR_SW	0.640	45	034N-109W-23-NWSW	31466	CR CC72/245
P24244.0D	ORCUTT PIPELINE	C R NO 2 FAMILY LIMITED PARTNERSHIP;	11/19/1973	IRR_SW	0.600	42	034N-109W-27-NWNE	37397	CR CC81/231
P24662.0D	WEBER SPRINKLER SYSTEM	GEORGE WEBER;	02/06/1975	IRR_SW, STO	0.196	9.45	033N-109W-03-NWSW		CR CC73/242
P24859.0D	FORSGREN PUMP LINE	RICHARD FORSGREN;	02/25/1975	DOM_SW	0.056	0	034N-109W-27-NENE	32143	CR CC72/490
P24860.0D	MCCULLOUGH PUMP LINE	BETTY LEWIS; LUCILE MCCULLOUGH; BOYD LEWIS; EVELYN LEWIS; GERTRUDE LEWIS;	02/25/1975	MIS_SW	0.066	0	034N-109W-27-NENE	32144	CR CC72/491
P25416.0D	LEWIS PIPE LINE	BOYD LEWIS; EVELYN LEWIS;	05/06/1976	DOM_SW	0.056	0	034N-109W-27-NENE	35916	CR CC78/346

Permit No.	Facility Name	Appropriator	Priority	Use	C.F.S/AF	Acres	HG LOC	Proof No.	CR No.
P8937.0R	ENLARGED FREMONT LAKE RESERVOIR	GERTRUDE LEWIS; BETTY LEWIS; TOWN OF PINEDALE ET AL;	02/02/1977	IRR_SW, MUN_SW	10292.000AF	0	034N-109W-23-SWNW	37143	CR CR14/298
P8433.0R	TOWN OF PINEDALE WASTEWATER STORAGE RESERVOIR	TOWN OF PINEDALE;	03/31/1982	IND_SW	0.000AF	0	033N-109W-10-NWNW	33470	CR CR09/502
P9305.0R	GOLF COURSE POND NO. 1 RESERVOIR	SUBLETTE COUNTY;	05/07/1984	REC	3.120AF	0	033N-109W-04-SWNW	34729	CR CR11/462
P9309.0R	GOLF COURSE POND NO. 2 RESERVOIR	SUBLETTE COUNTY;	05/07/1984	REC	0.780AF	0	033N-109W-04-SWNW	34730	CR CR11/463
P9310.0R	GOLF COURSE POND NO. 3 RESERVOIR	SUBLETTE COUNTY;	05/07/1984	REC	1.300AF	0	033N-109W-04-SWNW	34731	CR CR11/464
P9311.0R	GOLF COURSE POND NO. 4 RESERVOIR	SUBLETTE COUNTY;	05/07/1984	IRR_SW, REC	0.160AF	0	033N-109W-05-NESE	34732	CR CR11/465
P6859.0E	ENLARGED COLORADO DITCH	SUBLETTE COUNTY;	05/07/1984	RES	3.120		034N-109W-28-SESE	34663	CR CC76/218
P6928.0E	ENLARGED HIGHLAND CANAL	WILLIAM R AND DANA FENN;	04/26/1989	IRR_SW, STO	0.000	44	034N-109W-23-NWSW	35343	CR CC77/208
P9821.0R	RADAKOVICH RESERVOIR	ROY RADAKOVICH;	12/09/1991	FIS, WL	1.730AF	0	033N-109W-04-SENE	36442	CR CR13/352
P9827.0R	REFLECTION RESERVOIR	JOHN DOYLE;	03/05/1992	FIS, WL	1.320AF	0	033N-109W-10-NWNE	36202	CR CR13/239
P9913.0R	PINEDALE CHILDREN'S FISH RESERVOIR	TOWN OF PINEDALE;	05/10/1993	FIS	0.780AF	0	033N-109W-04-NENE	36285	CR CR13/271
P31370.0D	ZIEGLER PUMP	SUE ANN ZIEGLER TRUST;	07/14/1994	IRR_SW	0.000	3.6	033N-109W-10-SWSE	37099	CR CC81/111
P31371.0D	CCC PIPELINE	USDA FOREST SERVICE; USDI BUREAU OF LAND MANAGEMENT;	09/08/1994	RES	0.000	0	034N-109W-23-NWSW	37305	CR CC81/176
P11349.0R	HARRIGAN RESERVOIR	JAMES G. AND MARLA J. HARRIGAN;	07/22/1999	FIS, WL	2.170AF	0	033N-109W-03-SESW	39412	CR CR17/176
P10965.0R	AMY POND RESERVOIR	LARRY WHITAKER;	03/17/2000	FIS	3.400AF	0	034N-109W-33-NWNE	38599	CR CR16/185
P10966.0R	EMILY POND RESERVOIR	LARRY WHITAKER;	03/17/2000	FIS	0.740AF	0	034N-109W-33-NWNE	38600	CR CR16/186
P32871.0D	K BAR B PUMP NO. 2 SPRINKLER SYSTEM	HARROWER LIVING TRUST;	09/27/2000	IRR_SW	0.046	3.2	033N-109W-03-SESW	40398	CR CC89/211
P32720.0D	HARRIGAN DITCH	JAMES G. AND MARLA J. HARRIGAN;	10/13/2000	RES	6.110	0	033N-109W-03-SESW	39393	CR CC85/150
P33042.0D	TREE HOUSE DITCH	VICTOR L. AND ROBYN L. MCMURRY;	06/11/2002	FTH, RES	1.660	0	034N-109W-33-SWNE	39984	CR CC88/044
P11765.0R	TREE HOUSE RESERVOIR	VICTOR L AND ROBYN L MCMURRY;	06/11/2002	FIS, WL	0.310AF	0	034N-109W-33-SWNE	40019	CR CR18/221
P34246.0D	LAKESIDE LODGE RESORT NO. 1 PIPELINE	USDA FOREST SERVICE;	08/10/2009	DOM_SW	0.056	0	034N-109W-23-SESE	41595	CR CC93/266
P34247.0D	LAKESIDE LODGE RESORT NO. 2 PIPELINE	USDA FOREST SERVICE;	08/10/2009	DOM_SW	0.056	0	034N-109W-23-SESE	41596	CR CC93/267
P34248.0D	LAKESIDE LODGE RESORT NO. 3 PIPELINE	USDA FOREST SERVICE;	08/10/2009	DOM_SW	0.056	0	034N-109W-23-SESE	41597	CR CC93/268

MIDTOWN DRAW, TRIBUTARIES OF PINE CREEK, WEST FORK NEW FORK RIVER, NEW FORK RIVER, GREEN RIVER

P14851.0S	MOLLRING STOCK RESERVOIR	HAUB BROTHERS ENTERPRISES TRUST;	09/25/2000	STO	0.680AF	0	033N-109W-03-NENW	40541	CR CR19/183

WATER STORED IN FREMONT LAKE RESERVOIR, TRIBUTARIES OF PINE CREEK, WEST FORK NEW FORK RIVER, NEW FORK RIVER, GREEN RIVER

P4951.0E	ENLARGED LEE DITCH (PINE CREEK CANAL NO. 1)	WILLIAM M. FENN AND LAURA J. FENN REVOCABLE TRUSTS;	08/10/1933	FTH, RES	0.150		034N-109W-28-SESE	21553	CR CC90/077
P4951.0E	ENLARGED LEE DITCH ACT PINEDALE WATER SUPPLY PIPELINE	TOWN OF PINEDALE;	08/10/1933	MUN_SW	103.200	0	034N-109W-23-SWNW	24339	CR CC75/287
P4951.0E	ENLARGED LEE DITCH	ELTON AND ALMIRA COOLEY;	08/10/1933	IRR_SW	266.290	77.32	034N-109W-28-SESE	25182	CR CC63/222
P4951.0E	ENLARGED LEE DITCH	ELTON COOLEY;	08/10/1933	IRR_SW	663.120	192.5	034N-109W-28-SESE	24339	CR CC61/391
P4951.0E	ENLARGED LEE DITCH	J. C. CLARK;	08/10/1933	IRR_SW	2164.200	628.35	034N-109W-28-SESE	21553	CR CC52/279
P4954.0E	ENLARGED COLORADO DITCH	JOHN ALLEN;	08/10/1934	IRR_SW	798.700	231.89	034N-109W-28-SESE	21554	CR CC52/280
P4954.0E	ENLARGED COLORADO DITCH	JOHN BLOOM;	08/10/1934	IRR_SW	1007.410	292.85	034N-109W-28-SESE	21555	CR CC52/281
P4943.0E	ENLARGED HANSEN LUCE DITCH	WILLIAM BAYER;	08/10/1934	DOM_SW, IRR_SW, STO	533.860	155	034N-109W-27-SENW	21549	CR CC52/275
P4944.0E	ENLARGED HIGHLAND CANAL	THURSTON DOYLE;	08/10/1934	DOM_SW, IRR_SW, STO	664.310	192.87	034N-109W-23-NWSW	21550	CR CC52/276
P4950.0E	ENLARGED MCDOWELL DITCH	J. C. CLARK;	08/10/1934	IRR_SW	551.080	160	033N-109W-04-NESE	21551	CR CC52/277
P4950.0E	ENLARGED MCDOWELL DITCH	ROBERT CLARK;	08/10/1934	IRR_SW	393.700	114.3	033N-109W-04-NESE	21552	CR CC52/278
P4944.0E	ENLARGED HIGHLAND CANAL	C C AND ANGELINE FELTNER;	08/10/1934	DOM_SW, IRR_SW, STO	110.210	32	034N-109W-23-SWSW	25180	CR CC63/220
P4944.0E	ENLARGED HIGHLAND CANAL	ORVAL AND MABLE EDNA JAMES;	08/10/1934	DOM_SW, IRR_SW, STO	354.780	103	034N-109W-23-SWSW	25181	CR CC63/221
P4954.0E	ENLARGED COLORADO DITCH ACT PINEDALE WATER SUPPLY PIPELINE	TOWN OF PINEDALE;	08/10/1934	MUN_SW	422.090	0	034N-109W-28-SESE		CR CC75/288
P4954.0E	ENLARGED COLORADO DITCH	COUNTY OF SUBLETTE;	08/10/1934	IRR_SW	582.350	69.31	034N-109W-28-SESE		CR CC75/265
P4954.0E	ENLARGED COLORADO DITCH -	STATE OF WYOMING, GAME AND FISH	08/10/1934	ISF	173.108	0	034N-109W-23-SWSW	21554	CR CC90/172

Permit No.	Facility Name	Appropriator	Priority	Use	C.F.S/AF	Acres	HG LOC	Proof No.	CR No.
	INSTREAM FLOW SEGMENTS	COMMISSION;							
	FELTNER DRAW, TRIBUTARIES OF PINE CREEK, WEST FORK NEW FORK RIVER, NEW FORK RIVER, GREEN RIVER								
P22608.0D	LEE DITCH (PINE CREEK NO. 1 CANAL)	PAUL HAGENSTEIN; BETTE ANN HAGENSTEIN;	04/01/1965	IRR_SW	0.000	233.81	033N-109W-02-SESW	27910	CR CC67/323
P22608.0D	LEE DITCH (PINE CREEK NO. 1 CANAL)	MARJORIE HAGENSTEIN;	04/01/1965	IRR_SW	0.000	440	033N-109W-02-SESW	28112	CR CC68/066
P12374.0R	SMOKEY RESERVOIR	PDM LAND COMPANY LLC;	07/05/2005	FIS, WL	4.740AF	0	033N-109W-02-SESW	41397	CR CR22/136
P12375.0R	SONNY RESERVOIR	PDM LAND COMPANY LLC;	07/05/2005	CMU, FIS, WL	2.720AF	0	033N-109W-02-SESW	41638	CR CR22/316
	SKINNER DRAW, TRIBUTARIES OF FELTNER DRAW, PINE CREEK, WEST FORK NEW FORK RIVER, NEW FORK RIVER, GREEN RIVER								
P12373.0R	SKINNER RESERVOIR	PDM LAND COMPANY LLC;	07/05/2005	FIS, WL	4.320AF	0	033N-109W-02-SWSE	41398	CR CR22/137
	BRAZILL DRAW, TRIBUTARIES OF PINE CREEK, WEST FORK NEW FORK RIVER, NEW FORK RIVER, GREEN RIVER								
P7703.0R	PULLEY-BONE POND RESERVOIR	JACK RICHARDSON;	05/16/1975	FIS	11.780AF	0	033N-109W-10-SWNE	31967	CR CR08/327
P7704.0R	GIZZARD POND RESERVOIR	JACK RICHARDSON;	05/16/1975	FIS	7.560AF	0	033N-109W-10-SENE	31970	CR CR08/328
P33911.0D	PULLEY-BONE PUMP	HEIDI HICKS WILSON; JOAN ELAINE NEUMEYER;	03/17/2008	IRR_SW	0.000	4.5	033N-109W-10-SENE	40399	CR CC89/212
P13153.0R	ENLARGED PULLEY-BONE POND RESERVOIR	HEIDI HICKS WILSON; JOAN ELAINE NEUMEYER;	03/17/2008	IRR_SW	0.740AF	0	033N-109W-10-SWNE	40412	CR CR19/118
	RICHARDSON DRAW, TRIBUTARIES OF BRAZILL DRAW, PINE CREEK, WEST FORK NEW FORK RIVER, NEW FORK RIVER, GREEN RIVER								
P7705.0R	ROOSTER-SPUR POND RESERVOIR	JACK RICHARDSON;	05/16/1975	FIS	15.620AF	0	033N-109W-10-SENE	31971	CR CR08/329
P12110.0S	PAPE'S STOCK RESERVOIR	BILLY PAPE;	09/09/1994	STO	0.830AF	0	033N-109W-03-NESE	37144	CR CR14/299
	THOMPSON SLOUGH, TRIBUTARIES OF PINE CREEK, WEST FORK NEW FORK RIVER, NEW FORK RIVER, GREEN RIVER								
P22607.0D	LEE DITCH (PINE CREEK NO. 1 CANAL)	MARJORIE HAGENSTEIN;	04/01/1965	IRR_SW	0.000	440	033N-109W-03-NESE	28113	CR CC68/067
P22607.0D	LEE DITCH (PINE CREEK NO. 1 CANAL)	PAUL HAGENSTEIN; BETTE ANN HAGENSTEIN;	04/01/1965	IRR_SW	0.000	233.81	033N-109W-03-NESE	27911	CR CC67/324
P7927.0R	FALER FISH POND RESERVOIR	HAROLD P. AND BEULAH M. FALER;	12/14/1977	FIS	0.370AF	0	033N-109W-03-NENE	32665	CR CR08/742
P32838.0D	LARRY L. PROUD DOMESTIC PUMP	LARRY K. AND JENIFER L. PROUD;	06/16/2003	DOM_SW	0.044	0	034N-109W-34-SENE	40233	CR CC89/049
	SPILL CREEK, TRIBUTARIES OF PINE CREEK, WEST FORK NEW FORK RIVER, NEW FORK RIVER, GREEN RIVER								
P20534.0D	REINOW DITCH	BERT REINOW;	10/02/1950	IRR_SW	0.040	3	034N-109W-34-SWNW	25348	CR CC63/393
	ANTELOPE DRAW, TRIBUTARIES OF PINE CREEK, WEST FORK NEW FORK RIVER, NEW FORK RIVER, GREEN RIVER								
P10277.0S	ANTELOPE DRAW STOCK RESERVOIR	BRUCE C. "RUSTY" GOOCH;	07/01/1987	STO	18.700AF	0	034N-109W-22-SWSW	34733	CR CR11/466
	KERSHISNIK CREEK, TRIBUTARIES OF PINE CREEK, WEST FORK NEW FORK RIVER, NEW FORK RIVER, GREEN RIVER								
P25417.0D	TATMAN PIPE LINE	ROBERT TATMAN; FRANK TATMAN;	05/06/1976	DOM_SW	0.056	0	034N-109W-26-NWNW	35918	CR CC78/348
	CCC DRAW, TRIBUTARIES OF PINE CREEK, WEST FORK NEW FORK RIVER, NEW FORK RIVER, GREEN RIVER								
P10136.0R	CCC RESERVOIR	USDA FOREST SERVICE; USDI BUREAU OF LAND MANAGEMENT;	09/08/1994	WL	27.050AF	0	034N-109W-26-NWNW	37313	CR CR14/431

Permit No.	Facility Name	Appropriator	Priority	Use	C.F.S/AF	Acres	HG LOC	Proof No.	CR No.
	FREMONT LAKE, TRIBUTARIES OF PINE CREEK, WEST FORK NEW FORK RIVER, NEW FORK RIVER, GREEN RIVER								
P19396.0D	FREMONT LAKE GUARD STATION WATER SUPPLY SYSTEM	UNITED STATES OF AMERICA, FOREST SERVICE;	07/01/1940	DOM_SW	0.056	0	034N-109W-23-SWNW	23126	CR CC58/347
	UNNAMED SPRINGS NO. 1&2, TRIBUTARIES OF FREMONT LAKE, PINE CREEK, WEST FORK NEW FORK RIVER, NEW FORK RIVER, GREEN RIVER								
P19500.0D	FREMONT LAKE CAMPGROUND WATER SUPPLY SYSTEM	UNITED STATES OF AMERICA, FOREST SERVICE;	07/01/1940	DSP, REC	0.027	0	034N-108W-06-NWSW	25251	CR CC63/283
P19501.0D	FREMONT LAKE CAMPGROUND WATER SUPPLY SYSTEM	UNITED STATES OF AMERICA, FOREST SERVICE;	01/28/1941	DSP, REC	0.027	0	034N-108W-06-NWSW	25353	CR CC63/398
	SYLVAN SPRING, TRIBUTARIES OF PINE CREEK (AT FREMONT LAKE), WEST FORK NEW FORK RIVER, NEW FORK RIVER, GREEN RIVER								
P21400.0D	SYLVAN BAY SUMMER HOME AREA PIPELINE	SYLVAN BAY HOMEOWNERS ASSOCIATION; U.S.D.A. FOREST SERVICE;	04/06/1954	DOM_SW	0.100	0	035N-108W-32-SESW	35917	CR CC78/347
	FLC SPRING, TRIBUTARIES OF FLC SPRING DRAW, PINE CREEK, WEST FORK NEW FORK RIVER, NEW FORK RIVER, GREEN RIVER								
P33903.0D	FREMONT LAKE CAMPGROUND SPRING	USDA, FOREST SERVICE;	03/12/2008	DOM_SW	0.056	0	034N-108W-06-NENE	39985	CR CC88/045
	DUCK CREEK, TRIBUTARIES OF WEST FORK NEW FORK RIVER, NEW FORK RIVER, GREEN RIVER								
P2590.0D	REYNOLD'S DITCH	JOHN REYNOLDS;	05/08/1900	IRR_SW	4.130	290	034N-110W-15-NWNE	5432	CR CC06/046
P2861.0D	MCNISH NO. 1 DITCH	ELIZABETH MCNISH;	10/10/1900	IRR_SW	1.640	115	034N-110W-10-NWNE	9359	CR CC29/025
P590.0E	ENLARGED DUCK CREEK DITCH ACIPT DUCK CREEK NO. 2 DITCH	ELIZABETH MCNISH;	10/10/1900	IRR_SW	2.570	180	034N-110W-03-SESW	9360	CR CC29/026
P2955.0D	MCDONOUGH NO. ONE DITCH	EMMA WESTFALL;	12/05/1900	IRR_SW	4.000	280	035N-110W-34-SWNW	6708	CR CC20/056
P3852.0D	GENEVA DITCH ACT STIPA DITCH	WILLIAM AND MAGDALINE BLOOM;	04/24/1902	IRR_SW	0.470	33	033N-109W-05-SWNE		CR CC72/498
P1628.0E	ENLARGED BALLOU-PLANK DITCH	EUGENE PLANK;	10/23/1906	IRR_SW	1.400	98	034N-110W-22-NWNE	10867	CR CC32/021
P2206.0E	ENLARGED REYNOLDS DITCH	A L EDMUNDSEN;	02/19/1910	IRR_SW	0.300	21	034N-110W-15-NWNE	10868	CR CC32/022
P10727.0D	METZ DITCH	BERT METZ;	05/22/1911	DOM_SW, IRR_SW	1.160	81.4	034N-110W-36-SWNW	15235	CR CC39/275
P12618.0D	REYNOLDS-MCNISH DITCH	JOHN REYNOLDS;	08/21/1914	IRR_SW	1.000	70	034N-110W-10-NWNE	14649	CR CC38/295
P3609.0E	ENLARGED CRAWFORD DITCH	NELLIE PLANK;	05/04/1916	DOM_SW, IRR_SW	1.370	96	034N-110W-15-NESW	19208	CR CC45/215
P4292.0E	ENLARGED CRAWFORD DITCH	ABNER LUMAN COMPANY;	09/07/1921	IRR_SW	1.110	78	034N-110W-15-NESW	23127	CR CC58/348
P4845.0E	ENLARGED REYNOLDS-MCNISH DITCH	ABNER LUMAN COMPANY;	06/11/1929	IRR_SW	0.450	31.6	034N-110W-10-NWNE	23128	CR CC58/349
P4839.0E	ENLARGED DUCK CREEK DITCH ACT DUCK CREEK NO. 2 DITCH	LEE THOMSON;	06/11/1929	IRR_SW	0.090	6	034N-110W-03-SESW	24751	CR CC62/305
P4845.0E	ENLARGED REYNOLDS-MCNISH DITCH	LEE THOMSON;	06/11/1929	IRR_SW	0.130	9	034N-110W-10-NWNE	24752	CR CC62/306
P4849.0E	ENLARGED CRAWFORD DITCH	JANIS JORGENSEN;	06/11/1929	IRR_SW	0.040	2.8	034N-110W-15-NESW	24753	CR CC62/307
P4851.0E	ENLARGED REYNOLDS DITCH	FRANK TYLER;	06/11/1929	IRR_SW	0.670	47	034N-110W-15-NWNE	24754	CR CC62/308
P4852.0E	ENLARGED METZ DITCH	GEORGE C. BAIR ESTATE;	06/11/1929	IRR_SW	0.070	5.2	034N-110W-36-SWNW	24755	CR CC62/309
P4852.0E	ENLARGED METZ DITCH	J. CHAUNCEY CLARK; J. CLARENCE CLARK;	06/11/1929				034N-110W-36-SWNW	24756	CR CC62/310
P4839.0E	ENLARGED DUCK CREEK DITCH	CARROLL NOBLE;	06/11/1929	IRR_SW	0.160	11.7	035N-110W-34-SWSW	21543	CR CC52/269
P4849.0E	ENLARGED CRAWFORD DITCH	FRANK TYLER;	06/11/1929	IRR_SW	0.230	16.8	034N-110W-15-NESW	21544	CR CC52/270
P4850.0E	ENLARGED BALLOU-PLANK DITCH	FRANK TYLER;	06/11/1929	IRR_SW	0.170	12	034N-110W-22-NWNE	21545	CR CC52/271
P4851.0E	ENLARGED REYNOLDS DITCH	NELS JORGENSEN;	06/11/1929	IRR_SW	0.430	30.2	034N-110W-15-NWNE	20902	CR CC49/121
P4853.0E	ENLARGED GENEVA DITCH	WILLIAM AND MAGDALINE BLOOM;	06/11/1929	IRR_SW	0.090	6.6	033N-109W-05-SWNE		CR CC72/499
P9414.0R	MILLER FISH POND RESERVOIR	THOMAS DAVENPORT J;	08/17/1988	FIS	3.340AF	0	034N-110W-03-NWSW	37145	CR CR14/300
P10713.0R	VALLEY HILLS RESERVOIR	NOBLE CONSTRUCTION, INC.;	03/23/1998	FIS, WL	10.820AF	0	033N-109W-05-NWNW	38598	CR CR16/184
P32997.0D	BURROUGH DITCH	BARBARA A. BURROUGH LIVING TRUST;	01/25/2002	IRR_SW	0.090	6.6	033N-109W-05-SWNW	39986	CR CC88/046
P11935.0R	DUCK PUDDLE RESERVOIR	J. MARK AND SUSAN G. NOBEL;	11/29/2004	FIS	9.930AF	0	033N-109W-06-NENW	40020	CR CR18/222
P34110.0D	SUBLETTE COUNTY NO. 6 DUCK CREEK PUMP	BOARD OF SUBLETTE COUNTY COMMISSIONERS;	02/17/2009	FIR, IND_SW	2.780	0	034N-110W-22-NESW	41370	CR CC94/041

Permit No.	Facility Name	Appropriator	Priority	Use	C.F.S/AF	Acres	HG LOC	Proof No.	CR No
P34132.0D	SUBLETTE COUNTY NO. 7 DUCK CREEK PUMP	SUBLETTE COUNTY COMMISSIONERS;	04/20/2009	FIR, IND_SW	0.000	0	033N-109W-05-NWNW	40910	CR CC92/155
	MORGAN DRAW, TRIBUTARIES OF WEST FORK NEW FORK RIVER, NEW FORK RIVER, GREEN RIVER								
P11339.0R	MORGAN RESERVOIR	THOMAS B. ROSSETTER TRUST;	07/26/1999	FIS	4.510AF	0	033N-109W-26-SENW	39411	CR CR17/175
	BURROUGH DRAW, TRIBUTARIES OF DUCK CREEK, WEST FORK NEW FORK RIVER, NEW FORK RIVER, GREEN RIVER								
P12505.0R	BURROUGH POND RESERVOIR	BARBARA A. BURROUGH LIVING TRUST;	10/05/2005	WL	0.380AF	0	033N-109W-05-SWNW	40021	CR CR18/223
	LITTLE DUCK CREEK, TRIBUTARIES OF DUCK CREEK, WEST FORK NEW FORK RIVER, NEW FORK RIVER, GREEN RIVER								
P8940.0D	GAIL NO. 1 DITCH	ABIGAIL REYNOLDS;	02/18/1909	IRR_SW	1.860	130	034N-110W-09-NENW	12206	CR CC34/397
P8941.0D	GAIL NO. 2 DITCH	JOHN C. REYNOLDS;	02/18/1909	IRR_SW	0.000		034N-110W-09-NWNE	13213	CR CC36/414
P8941.0D	GAIL NO. 2 DITCH	CLARA MUNSON;	02/18/1909	IRR_SW	0.970	68	034N-110W-09-NENW	13214	CR CC36/415
P2860.0E	ENLARGED GAIL NO. 2 DITCH	JOHN REYNOLDS;	10/03/1913	DOM_SW, IRR_SW	0.630	44	034N-110W-09-NENW	14650	CR CC38/296
P4848.0E	ENLARGED GAIL NO. 2 DITCH	ABNER LUMAN COMPANY;	06/11/1929	IRR_SW	0.750	52.8	034N-110W-09-NENW	23129	CR CC58/350
P5002.0E	ENLARGED GAIL NO. 2 DITCH	STATE OF WYOMING; ABNER LUMAN COMPANY;	04/20/1934	DOM_SW, IRR_SW, STO	0.630	44	034N-110W-09-NENW	23130	CR CC58/351
P5222.0E	ENLARGED GAIL NO. 2 DITCH	STATE BOARD OF LAND COMMISSIONERS;	03/30/1936	DOM_SW, IRR_SW, STO	3.040	213	034N-110W-09-NENW	22894	CR CC58/152
P5205.0R	LAUZER FISH POND RESERVOIR	MELVIN BAGLEY;	01/16/1940	FIS	9.930AF	0	035N-110W-32-SESW	27940	CR CR03/481
P5677.0E	ENLARGED GAIL NO. 2 DITCH	JAMES JORGENSEN;	04/23/1953	IRR_SW, STO	0.560	39.2	034N-110W-09-NENW	26191	CR CC65/124
P5919.0E	ENLARGED GAIL NO. 2 DITCH	JAMES NOBLE;	05/02/1957	IRR_SW	2.660	186.5	034N-110W-09-NENW	27426	CR CC67/036
P5919.0E	ENLARGED GAIL NO. 2 DITCH	STATE OF WYOMING, BOARD OF LAND COMMISSIONERS;	05/02/1957	IRR_SW	0.570	40	034N-110W-09-NENW	27427	CR CC67/037
P6801.0R	SUNSET RESERVOIR	V. LOONEY; R. SIEVERS; G. MASON;	06/07/1965	REC	70.380AF	0	034N-110W-05-NENW	27938	CR CR03/479
P6838.0R	KITCHEN RESERVOIR	THOMAS KITCHEN;	11/23/1965	IRR_SW, REC, STO	99.130AF	0	034N-110W-05-NWSE	27939	CR CR03/480
P9525.0R	ENLARGED LAUZER FISH POND RESERVOIR	MELVIN BAGLEY;	09/12/1988	FIS	9.230AF	0	035N-110W-32-SESW	35744	CR CR13/066
	PFISTERER CREEK, TRIBUTARIES OF LITTLE DUCK CREEK, DUCK CREEK, WEST FORK NEW FORK RIVER, NEW FORK RIVER, GREEN RIVER								
P9029.0S	PFISTERER STOCK RESERVOIR	STEV PFISTERER;	10/19/1982	STO	3.900AF	0	034N-110W-04-NWSE	33471	CR CR09/503
	NEW SPRINGS, TRIBUTARIES OF LITTLE DUCK CREEK, DUCK CREEK, WEST FORK NEW FORK RIVER, NEW FORK RIVER, GREEN RIVER								
P7795.0D	J F LAW DITCH	BERT CLARK;	06/22/1907	DOM_SW	0.000		034N-110W-05-NWSE	9968	CR CC30/128
P7795.0D	J F LAW DITCH	ROBERT CLARK; J. F. LAW;	06/22/1907	IRR_SW	0.350	25	034N-110W-05-NWSE	9969	CR CC30/129
P15606.0D	SPRING DITCH	R. CLARK;	10/13/1919	IRR_SW	1.290	90	034N-110W-05-NESE	18244	CR CC43/701
P4846.0E	ENLARGED SPRING DITCH	EDWARD LAUZER;	06/11/1924	IRR_SW	0.350	24.6	034N-110W-05-NESE	24758	CR CC62/312
P4847.0E	ENLARGED J F LAW DITCH	EDWARD LEUZER;	06/11/1929	IRR_SW	0.090	6	034N-110W-05-NWSE	24759	CR CC62/313
P4847.0E	ENLARGED J F LAW DITCH	ABNER LUMAN COMPANY;	06/11/1929	IRR_SW	0.420	29.6	034N-110W-05-NWSE	23131	CR CC58/352
	ANTELOPE DRAW, TRIBUTARIES OF DUCK CREEK, WEST FORK NEW FORK RIVER, NEW FORK RIVER, GREEN RIVER								
P5489.0S	FELTNER NO. 1 STOCK RESERVOIR	KURT FELTNER;	11/19/1965	STO	2.300AF	0	035N-111W-25-SENW	27941	CR CR03/482
	BARBER CREEK, TRIBUTARIES OF WEST FORK NEW FORK RIVER, NEW FORK RIVER, GREEN RIVER								
P15855.0D	WEIGAND DITCH	GEORGE WEIGAND;	03/01/1920	IRR_SW	0.610	43	034N-109W-16-SESW	18240	CR CC43/697
P15857.0D	BRAZZELL DITCH	MAUD AND L G MCLAUGHLIN;	05/11/1920	IRR_SW	0.490	34.44	034N-109W-28-SESW	20892	CR CC49/111
P29773.0D	GOLF COURSE DRAW DITCH	SUBLETTE COUNTY;	05/07/1984	IRR_SW, RES	0.000	67.04	033N-109W-05-NESE	34662	CR CC76/217

Permit No.	Facility Name	Appropriator	Priority	Use	C.F.S/AF	Acres	HG LOC	Proof No	CR No
P12449.0R	OLE BOURBON'S MERE RESERVOIR	MARY ANN MENSTER TRUST;	12/21/2005	FIS	7.530AF	0	034N-109W-33-SWNW	40022	CR CR18/224
	SPRING CREEK, TRIBUTARIES OF BARBER CREEK, WEST FORK NEW FORK RIVER, NEW FORK RIVER, GREEN RIVER								
P17991.0D	SODA LAKE NO. 1 DITCH	WILLIAM BAYER;	10/08/1931	IRR_SW	0.970	68	035N-109W-27-SWSE	22451	CR CC57/201
P9375.0R	SODA LAKE WETLANDS RESERVOIR	WYOMING GAME AND FISH COMMISSION;	05/09/1988	FIS	53.550AF	0	035N-109W-27-NWSE	35513	CR CR12/382
	WILLOW CREEK, TRIBUTARIES OF WEST FORK NEW FORK RIVER, NEW FORK RIVER, GREEN RIVER								
T4216.0-	E C WALKER DITCH	GEORGE SMITH;	05/31/1889	IRR_SW	0.570	40	035N-110W-13-NESW	4216	CR CB03/079
P79.0D	E C WALKER DITCH	JOHN WELBORN; MARY HELEN WELBORN;	06/19/1891	IRR_SW	1.700	120	035N-110W-13-SENW		CR CC68/079
P476.0D	AUER DITCH	HENRY BINNING;	05/09/1893	IRR_SW	1.930	135	035N-110W-25-SWNW	4218	CR CB03/080
P36.0E	ENLARGED WALKER DITCH	GEORGE SMITH;	05/09/1893	IRR_SW	1.000	71	035N-110W-13-SENW	4220	CR CB03/081
P1408.0D	WILLOW GLEN DITCH	ORA DODGE;	06/08/1896	IRR_SW	3.115	218.28	035N-109W-07-NESW	4219	CR CA03/081
P1548.0D	ISLAND DITCH	NELS JORGENSEN;	07/16/1897	IRR_SW	2.800	195	034N-110W-13-NENE	4221	CR CA03/082
P2069.0D	SAMPSON DITCH	JOSEPH HILL;	02/09/1899	IRR_SW	4.200	294	034N-109W-30-NWNE	4222	CR CB03/082
P3358.0D	BINNING NO. 2 DITCH	BURLEIGH BINNING;	08/15/1901	IRR_SW	2.400	168	035N-110W-25-NWSW	10863	CR CC32/017
P3620.0D	SWAMP DITCH	CARRIE JORGENSEN;	12/13/1901	IRR_SW	2.000	140	034N-110W-12-SENE	5520	CR CC07/031
P772.0E	ENLARGED ISLAND DITCH	NELS JORGENSEN;	12/23/1901	IRR_SW	0.920	60	034N-110W-13-NENE	5521	CR CC07/032
P3621.0D	JORGENSEN-BOYCE DITCH	NELS JORGENSEN;	12/23/1901	IRR_SW	1.280	90	034N-109W-18-SESW	5522	CR CC07/033
P3621.0D	JORGENSEN-BOYCE DITCH	GRACE BOYCE;	12/23/1901	IRR_SW	1.920	135	034N-109W-18-SESW	6697	CR CC20/046
P4028.0D	LOZIER NO. 1 DITCH	AARON LOZIER;	06/24/1902	IRR_SW	1.040	73	035N-110W-23-SENE	8380	CR CC26/392
P4013.0D	BINNING ISLAND DITCH	BURLEIGH BINNING;	06/24/1902	IRR_SW	0.910	64	035N-110W-25-SESW	10864	CR CC32/018
P4028.0D	LOZIER NO. 1 DITCH	JOHN WELBORN; MARY HELEN WELBORN;	06/24/1902	IRR_SW	0.140	10	035N-110W-23-SENE	27551	CR CC67/125
P5660.0D	GRAHAM DITCH	GEORGE SMITH;	11/09/1903	IRR_SW	1.850	130	035N-109W-08-SWNW	9984	CR CC30/145
P7921.0D	BURCH DITCH	FANNIE BURCH;	07/22/1907	IRR_SW	0.500	35	034N-109W-30-SENE	9986	CR CC30/147
P10927.0D	WILLOW R S A DITCH	UNITED STATES OF AMERICA;	05/19/1911	DOM_SW, IRR_SW	0.710	49.9	036N-109W-20-SWNW	13211	CR CC36/412
P12100.0D	LIZZIE LOZIER DITCH ACIPT LIZZIE LOZIER NORTH DITCH	LIZZIE LOZIER;	10/25/1913	IRR_SW	1.770	124	035N-109W-05-SWNE	14663	CR CC38/309
P2907.0E	ENLARGED LIZZIE LOZIER DITCH ACT LIZZIE LOZIER NORTH DITCH	THOMAS COATS;	01/12/1914	IRR_SW	3.130	219	035N-109W-05-SWSE	16528	CR CC41/416
P2940.0E	ENLARGED BINNING NO. 2 DITCH	JOHN RAHM;	04/01/1914	IRR_SW	1.940	136	035N-110W-25-NWSW	14664	CR CC38/310
P3172.0E	ENLARGED JORGENSEN-BOYCE DITCH	JAMES MCLAUGHLIN;	04/12/1915	IRR_SW	0.430	30	034N-109W-18-SESW	15927	CR CC40/304
P15882.0D	BUGHOUSE DITCH ACT WILLOW R S A DITCH	SIDNEY REYNOLDS;	08/27/1920	DOM_SW, IRR_SW	0.400	28.6	036N-109W-20-SWNW	21108	CR CC49/413
P15882.0D	BUGHOUSE DITCH ACT WILLOW R S A DITCH	ERNEST REMA;	08/27/1920	DOM_SW, IRR_SW	1.160	81.2	036N-109W-20-SWNW	20120	CR CC47/046
P4145.0E	ENLARGED WILLOW R S A DITCH	ERNEST REMA;	08/27/1920	DOM_SW, IRR_SW	1.100	77.3	036N-109W-20-SWNW	20121	CR CC47/047
P4362.0E	ENLARGED LIZZIE LOZIER DITCH	ASHER WILLIAMSON;	08/19/1922	DOM_SW, IRR_SW	0.890	62.5	035N-109W-05-SWNE	19206	CR CC45/213
P4359.0E	ENLARGED LIZZIE LOZIER DITCH ACT LIZZIE LOZIER NORTH DITCH	IRVIN LOZIER;	03/17/1923	IRR_SW	0.260	18	035N-109W-05-SWSE	18611	CR CC44/382
P4402.0E	ENLARGED WILLOW R S A DITCH	ERNEST REMA;	02/05/1924	IRR_SW	0.070	5	036N-109W-20-SWNW	20122	CR CC47/048
P4902.0E	ENLARGED JORGENSEN-BOYCE DITCH	CARRIE JORGENSEN;	08/01/1933	IRR_SW	0.070	5	034N-109W-18-SESW	20894	CR CC49/113
P4902.0E	ENLARGED JORGENSEN-BOYCE DITCH	NELS JORGENSEN;	08/01/1933	IRR_SW	0.170	12	034N-109W-18-SESW	20895	CR CC49/114
P4902.0E	ENLARGED JORGENSEN-BOYCE DITCH	CHARLES BAYER;	08/01/1933	DOM_SW, IRR_SW, STO	0.260	18	034N-109W-18-SESW	20896	CR CC49/115
P4903.0E	ENLARGED SWAMP DITCH	NELS JORGENSEN;	08/01/1933	DOM_SW, IRR_SW, STO	1.380	96.83	034N-110W-12-SENE	20897	CR CC49/116
P4903.0E	ENLARGED SWAMP DITCH	CARRIE JORGENSEN;	08/01/1933	IRR_SW	0.430	30.37	034N-110W-12-SENE	20898	CR CC49/117
P4907.0E	ENLARGED SWAMP DITCH	NELS JORGENSEN;	08/18/1933	DOM_SW, IRR_SW, STO	0.000	290	034N-110W-12-SENE	20899	CR CC49/118
P4907.0E	ENLARGED SWAMP DITCH	GEORGE JORGENSEN;	08/18/1933	DOM_SW, IRR_SW, STO	0.000	16	034N-110W-12-SENE	20900	CR CC49/119
P4907.0E	ENLARGED SWAMP DITCH	ED STEELE;	08/18/1933	DOM_SW, IRR_SW, STO	0.000	279.1	034N-110W-12-SENE	21415	CR CC52/138
P4907.0E	ENLARGED SWAMP DITCH	FRED ECKLUND;	08/18/1933	DOM_SW, IRR_SW, STO	0.000	638.8	034N-110W-12-SENE	21416	CR CC52/139
P4907.0E	ENLARGED SWAMP DITCH	FRANK STEELE;	08/18/1933	IRR_SW	0.000	262.3	034N-110W-12-SENE	21417	CR CC52/140

Permit No	Facility Name	Appropriator	Priority	Use	C.F.S/AF	Acres	HG LOC	Proof No.	CR No.
P19004.0D	WILLOW CREEK SUPPLEMENTAL DITCH	FRED ECKLUND;	09/10/1936	IRR_SW	0.280	20	034N-109W-19-SWSE	22756	CR CC58/034
P19004.0D	WILLOW CREEK SUPPLEMENTAL DITCH	FRANK STEELE;	09/10/1936	IRR_SW	0.540	37.5	034N-109W-19-SWSE	22757	CR CC58/035
P19004.0D	WILLOW CREEK SUPPLEMENTAL DITCH	CHARLES BAYER;	09/10/1936	IRR_SW	0.000	166.09	034N-109W-19-SWSE	22895	CR CC58/153
P19004.0D	WILLOW CREEK SUPPLEMENTAL DITCH	ED EDWARDS;	09/10/1936	IRR_SW	0.000	285.2	034N-109W-19-SWSE	22896	CR CC58/154
P6222.0E	ENLARGED WILLOW GLEN DITCH	WILLARD ROBERT BINNING;	04/13/1966	IRR_SW	0.060	4	035N-109W-07-NESW	31014	CR CC71/498
P6222.0E	ENLARGED WILLOW GLEN DITCH ACIPT GRAHAM DITCH	BLATTLAND INVESTMENTS LIMITED LIABILITY COMPANY;	04/13/1966	IRR_SW	1.860	130	035N-109W-07-NESW		CR CC83/004
P6264.0E	ENLARGED LIZZIE LOZIER DITCH	WALTER LOZIER;	04/19/1966	IRR_SW	0.400 ORI SUP	28 108	035N-109W-05-SWNE	30080	CR CC70/206
P6794.0E	ENLARGED SAMPSON DITCH	EDWARD STEELE J;	01/07/1982	IRR_SW	0.970	67.96	034N-109W-30-NWNE	35344	CR CC77/209
P7274.0E	ENLARGED WILLOW GLEN DITCH	JOHN BLATT;	04/20/2000	FIS, FTH		0	035N-109W-07-NESW	38569	CR CC83/129
P11003.0R	BLATT LAKE RESERVOIR	JOHN BLATT;	04/20/2000	FIS, WET	148.650AF	0	035N-110W-14-SESE	38602	CR CR16/188
P12911.0R	MIDDLE WILLOW POND RESERVOIR	BLATTLAND INVESTMENTS, LLC;	01/19/2001	FIS	10.400AF	0	035N-110W-23-SENE	40023	CR CR18/225
P11648.0R	UPPER WILLOW RESERVOIR	BLATTLAND INVESTMENTS, LLC;	05/24/2001	FIS, WET	8.600AF	0	035N-110W-13-SENW	40024	CR CR18/226
P34115.0D	SUBLETTE COUNTY NO. 3 WILLOW CREEK PUMP	BOARD OF SUBLETTE COUNTY COMMISSIONERS;	02/17/2009	FIR, IND_SW	0.000	0	034N-109W-19-SWSE	40911	CR CC92/156

BINNING CREEK, TRIBUTARIES OF WILLOW CREEK, WEST FORK NEW FORK RIVER, NEW FORK RIVER, GREEN RIVER

P19315.0D	MARGARET DITCH	BURLEIGH DEAN AND JOSEPHINE H BINNING;	02/08/1940	IRR_SW	0.000	27	034N-109W-06-SWSE	24760	CR CC62/314

DEER DRAW, TRIBUTARIES OF WILLOW CREEK, WEST FORK NEW FORK RIVER, NEW FORK RIVER, GREEN RIVER

P12464.0R	CIERVO RESERVOIR	JAMES ROGERS;	01/03/2006	FIS, WL	4.420AF	0	034N-109W-06-SESW	40244	CR CR19/035

LAKE CREEK, TRIBUTARIES OF WILLOW CREEK, WEST FORK NEW FORK RIVER, NEW FORK RIVER, GREEN RIVER

P1441.0D	LAKE CREEK DITCH	GEORGE SMITH;	07/17/1896	IRR_SW	3.070	215	035N-110W-25-NWNE	4223	CR CA03/083
P2922.0D	BINNING NO. 1 DITCH	BURLEIGH BINNING; HENRY BINNING J;	11/17/1900	IRR_SW	2.220	156	035N-110W-25-NWNE	6699	CR CC20/048
P3902.0D	BOULDER DITCH	IRVIN LOZIER;	05/19/1902	IRR_SW	0.850	60	035N-110W-25-NWNE	6700	CR CC20/049
P4001.0D	BINNING NO. 3 DITCH	HENRY BINNING;	06/24/1902	IRR_SW	4.400	308	035N-110W-25-NENE	6701	CR CC20/050
P4001.0D	BINNING NO. 3 DITCH	BURLEIGH BINNING;	06/24/1902	IRR_SW	2.940	206	035N-110W-25-NENE	6702	CR CC18/083
P4001.0D	BINNING NO. 3 DITCH	MARGARET BINNING;	06/24/1902	IRR_SW	0.560	39	035N-110W-25-NENE	13212	CR CC36/413
P1085.0E	ENLARGED BINNING NO. 1 DITCH	HENRY BINNING;	07/16/1903	IRR_SW	1.070	75	035N-110W-25-NWNE	10865	CR CC32/019
P1084.0E	ENLARGED BINNING NO. 3 DITCH	HENRY BINNING S;	07/22/1903	IRR_SW	3.420	239.36	035N-110W-25-NENE	6703	CR CC20/051
P1378.0E	ENLARGED BINNING NO. 3 DITCH	HANNAH BINNING;	04/27/1905	IRR_SW	1.950	137	035N-110W-25-NENE	6704	CR CC20/052
P1374.0E	ENLARGED BINNING NO. 3 DITCH	MARTIN WILLIAMS;	04/27/1905	IRR_SW	3.000	210	035N-110W-25-NENE	8384	CR CC26/394
P10038.0D	HIGH LINE DITCH	ARTHUR DOYLE;	07/29/1910	IRR_SW, S&D	2.260	158	035N-109W-19-SWNW	14054	CR CC37/441
P10038.0D	HIGH LINE DITCH	GLENN COLEMAN;	07/29/1910	DOM_SW, IRR_SW	2.490	174	035N-109W-19-SWNW	14665	CR CC38/311
P2710.0E	ENLARGED HIGH LINE DITCH	ALLIE BAYER;	10/21/1912	DOM_SW, IRR_SW	1.710	120	035N-109W-19-SWNW	14656	CR CC38/302
P2710.0E	ENLARGED HIGH LINE DITCH	WILLIAM BAYER;	10/21/1912	DOM_SW, IRR_SW	3.460	242	035N-109W-19-SWNW	14657	CR CC38/303
P2710.0E	ENLARGED HIGH LINE DITCH	STANLEY BAYER;	10/21/1912	DOM_SW, IRR_SW	3.540	248	035N-109W-19-SWNW	15236	CR CC39/276
P2710.0E	ENLARGED HIGH LINE DITCH	CHARLES BAYER;	10/21/1912	IRR_SW	1.710	120	035N-109W-19-SWNW	15424	CR CC39/500
P2710.0E	ENLARGED HIGH LINE DITCH	MARGARET BAYER;	10/21/1912	IRR_SW	0.780	55	035N-109W-19-SWNW	19576	CR CC45/625
P3068.0E	ENLARGED BINNING NO. 3 DITCH	FRED MILLER;	11/07/1914	IRR_SW	0.790	55	035N-110W-25-NENE	14658	CR CC38/304
P3831.0R	WILLOW LAKE RESERVOIR	BURLEIGH BINNING;	03/29/1922	DOM_SW, IRR_SW,STO	15120.000AF	0	035N-109W-19-SWNE	20211	CR CR01/023
P4319.0E	ENLARGED WILLOW LAKE DITCH	BURLEIGH DEAN AND JESEPHINE H BINNING; BURLEIGH DEAN BINNING J; WILLARD ROBERT BINNING; DEAN, ET UX AND CHILDREN BINNING;	09/14/1922	IRR_SW	4.160	291	035N-109W-19-SENW	28279	CR CC68/215
P4568.0E	ENLARGED BINNING NO. 3 DITCH	BURLEIGH BINNING;	01/21/1928	IRR_SW	0.260	18	035N-110W-25-NENE	20074	CR CC46/555
P4712.0E	ENLARGED HIGH LINE DITCH	WILLIAM BAYER;	09/10/1930	IRR_SW	2.750	193	035N-109W-19-SWNW	20574	CR CC47/514
P4712.0E	ENLARGED HIGH LINE DITCH	WILLIAM BAYER;	09/10/1930	IRR_SW	0.570	40	035N-109W-19-SWNW	20575	CR CC47/515
P4712.0E	ENLARGED HIGH LINE DITCH	GLEN COLEMAN;	09/10/1930	IRR_SW	0.400	28	035N-109W-19-SWNW	20901	CR CC49/120
P4475.0R	ENLARGED WILLOW LAKE RESERVOIR	BURLEIGH DEAN BINNING; CHARLES J. BAYER; BAR CROSS LAND LIVESTOCK CO.; GEORGE JORGENSEN;	11/04/1931	DOM_SW, IRR_SW,STO	3696.000AF	0	035N-109W-19-SWNE	24479	CR CR01/412

Permit No.	Facility Name	Appropriator	Priority	Use	C.F.S/AF	Acres	HG LOC	Proof No.	CR No.
		WILLIAM BAYER;							
P5607.0E	ENLARGED BINNING NO. 1 DITCH	BURLEIGH DEAN BINNING;	07/02/1951	IRR_SW	0.000	26	035N-110W-25-NWNE	24880	CR CC62/437
P20907.0D	JOSEPHINE DITCH	BURLEIGH DEAN BINNING;	07/02/1951	IRR_SW, STO	4.370	306	035N-109W-19-SENW	25349	CR CC63/394
P5645.0E	ENLARGED JOSEPHINE DITCH	BURLEIGH DEAN BINNING;	10/28/1952	IRR_SW, STO	3.560	269.14	035N-109W-19-SENW	25350	CR CC63/395

WATER STORED IN ENL WILLOW LAKE RESERVOIR, TRIBUTARIES OF SUPPLIED FROM LAKE CREEK, WILLOW CREEK, WEST FORK NEW FORK RIVER, NEW FORK RIVER, GREEN RIVER

P20910.0D	JOSEPHINE DITCH	BURLEIGH DEAN BINNING;	11/04/1931	IRR_SW	631.500	306	035N-109W-19-SENW		CR CC63/396

WATER STORED IN ENL WILLOW LAKE RESERVOIR, TRIBUTARIES OF SUPPLIED FROM LAKE CREEK, WILLOW CREEK, WEST FORK NEW FORK RIVER, NEW FORK RIVER, GREEN RIVER

P21110.0D	ENLARGED JOSEPHINE DITCH	BURLEIGH BINNING;	11/04/1931	IRR_SW	514.160	249.14	035N-109W-19-SENW	25352	CR CC63/397

WATER STORED IN ENL WILLOW LAKE RESERVOIR, TRIBUTARIES OF SUPPLIED FROM LAKE CREEK, WILLOW CREEK, WEST FORK NEW FORK RIVER, NEW FORK RIVER, GREEN RIVER

P20909.0D	BINNING NO. 1 DITCH	BURLEIGH DEAN BINNING;	11/04/1931	IRR_SW	53.660	26	035N-110W-25-NWNE		CR CC62/439

WATER STORED IN WILLOW LAKE RESERVOIR, TRIBUTARIES OF LAKE CREEK, WILLOW CREEK, WEST FORK NEW FORK RIVER, NEW FORK RIVER, GREEN RIVER

P4819.0E	ENLARGED BINNING NO. 1 DITCH	BURLEIGH BINNING;	03/29/1922	IRR_SW	574.000	287	035N-110W-25-NWNE	20903	CR CC49/122

WATER STORED IN WILLOW LAKE RESERVOIR, TRIBUTARIES OF LAKE CREEK, WILLOW CREEK, WEST FORK NEW FORK RIVER, NEW FORK RIVER, GREEN RIVER

P4820.0E	ENLARGED WILLOW LAKE DITCH ACT HIGH LINE DITCH	BURLEIGH BINNING;	03/29/1922	IRR_SW	90.000	45	035N-109W-19-SWNW	20904	CR CC49/123

WATER STORED IN WILLOW LAKE RESERVOIR, TRIBUTARIES OF LAKE CREEK, WILLOW CREEK, WEST FORK NEW FORK RIVER, NEW FORK RIVER, GREEN RIVER

P4319.0E	ENLARGED WILLOW LAKE DITCH ACT HIGH LINE DITCH	BURLEIGH BINNING;	03/29/1922	IRR_SW	445.000	291	035N-109W-19-SWNW	20203	CR CC47/146

WATER STORED IN WILLOW LAKE RESERVOIR, TRIBUTARIES OF LAKE CREEK, WILLOW CREEK, WEST FORK NEW FORK RIVER, NEW FORK RIVER, GREEN RIVER

P4567.0E	ENLARGED BINNING NO. 1 DITCH	BURLEIGH BINNING;	03/29/1922	IRR_SW	395.000	79	035N-110W-25-NWNE	20204	CR CC47/147

WATER STORED IN WILLOW LAKE RESERVOIR, TRIBUTARIES OF LAKE CREEK, WILLOW CREEK, WEST FORK NEW FORK RIVER, NEW FORK RIVER, GREEN RIVER

P4567.0E	ENLARGED BINNING NO. 1 DITCH	BURLEIGH BINNING;	03/29/1922	IRR_SW	780.000	156	035N-110W-25-NWNE	20205	CR CC47/148

Permit No.	Facility Name	Appropriator	Priority	Use	C F S/AF	Acres	HG LOC	Proof No.	CR No.
	WATER STORED IN WILLOW LAKE RESERVOIR, TRIBUTARIES OF LAKE CREEK, WILLOW CREEK, WEST FORK NEW FORK RIVER, NEW FORK RIVER, GREEN RIVER								
P4567.0E	ENLARGED BINNING NO. 1 DITCH	BURLEIGH BINNING;	03/29/1922	IRR_SW	375.000	75	035N-110W-25-NWNE	20206	CR CC47/149
	WATER STORED IN WILLOW LAKE RESERVOIR, TRIBUTARIES OF LAKE CREEK, WILLOW CREEK, WEST FORK NEW FORK RIVER, NEW FORK RIVER, GREEN RIVER								
P4569.0E	ENLARGED WILLOW LAKE DITCH ACT HIGH LINE DITCH	MARGARET BINNING;	03/29/1922	IRR_SW	405.000	81	035N-109W-19-SWNW	20207	CR CC47/150
	WATER STORED IN WILLOW LAKE RESERVOIR, TRIBUTARIES OF LAKE CREEK, WILLOW CREEK, WEST FORK NEW FORK RIVER, NEW FORK RIVER, GREEN RIVER								
P4570.0E	ENLARGED BINNING NO. 3 DITCH	BURLEIGH AND MARGARET E. BINNING;	03/29/1922	IRR_SW	6895.000	1377.36	035N-110W-25-NENE	20208	CR CC47/151
	WATER STORED IN WILLOW LAKE RESERVOIR, TRIBUTARIES OF LAKE CREEK, WILLOW CREEK, WEST FORK NEW FORK RIVER, NEW FORK RIVER, GREEN RIVER								
P20043.0D	LAKE CREEK DITCH	BAR CROSS LAND AND LIVESTOCK COMPANY;	01/30/1940	IRR_SW	0.000		---	24378	CR CC61/430
	WATER STORED IN WILLOW LAKE RESERVOIR, TRIBUTARIES OF LAKE CREEK, WILLOW CREEK, WEST FORK NEW FORK RIVER, NEW FORK RIVER, GREEN RIVER								
P5797.0E	ENLARGED JOSEPHINE DITCH	BAR CROSS LAND AND LIVESTOCK COMPANY;	02/23/1955				---	25834	CR CC64/328
	SPRING GULCH CREEK, TRIBUTARIES OF LAKE CREEK, WILLOW CREEK, WEST FORK NEW FORK RIVER, NEW FORK RIVER, GREEN RIVER								
P7332.0D	G M GLOVER DITCH	GEORGE GLOVER;	07/07/1906	IRR_SW	1.100	77	034N-110W-12-NENE	9985	CR CC30/146
P11569.0D	SPRING DITCH	MARGARET BINNING;	10/17/1912	IRR_SW	1.150	81	035N-109W-29-NWNW	14081	CR CC37/468
P11634.0D	SPRING NO. 2 DITCH	MARGARET BINNING;	12/23/1912	DOM_SW, IRR_SW	0.330	23	035N-109W-30-SENE	14082	CR CC37/469
	DUMPHREY CREEK, TRIBUTARIES OF WILLOW CREEK, WEST FORK NEW FORK RIVER, NEW FORK RIVER, GREEN RIVER								
P16153.0D	SPUR DITCH	FRANK ISAACSON;	05/14/1921	DOM_SW, IRR_SW	0.170	12	035N-110W-11-NWSE	19653	CR CC46/081
P32256.0D	ENLARGED WILLOW GLEN DITCH-DUMPHERY CREEK DIVERSION	JOHN BLATT;	04/20/2000	FIS, FTH		0	035N-110W-14-SENE	38570	CR CC83/130
	SCHOOL SECTION CREEK, TRIBUTARIES OF DUMPHREY CREEK, WILLOW CREEK, WEST FORK NEW FORK RIVER, NEW FORK RIVER, GREEN RIVER								
P24559.0D	WELBORN DITCH SYSTEM	JOHN B AND MARY HELEN WELBORN;	10/31/1974	IRR_SW, STO	2.616	179	035N-110W-01-NENW		CR CC73/143

Permit No.	Facility Name	Appropriator	Priority	Use	C.F.S/AF	Acres	HG LOC	Proof No.	CR No.
	SPRING DRAW, TRIBUTARIES OF SCHOOL SECTION CREEK, DUMPHREY CREEK, WILLOW CREEK, WEST FORK NEW FORK RIVER, NEW FORK RIVER, GREEN RIVER								
P24558.0D	JEROME DITCH	STATE OF WYOMING BOARD OF LAND COMMISSIONERS; JOHN B AND MARY HELEN WELBORN;	10/31/1974	IRR_SW, STO	0.926	61	036N-110W-36-SWNW		CR CC73/144
	SPRING CREEK, TRIBUTARIES OF WILLOW CREEK, WEST FORK NEW FORK RIVER, NEW FORK RIVER, GREEN RIVER								
P16442.0D	DAISY DITCH	LIZZIE LOZIER;	08/14/1922	IRR_SW	0.440	31	035N-109W-06-NESW	18641	CR CC44/412
	LITTLE WILLOW CREEK, TRIBUTARIES OF WILLOW CREEK, WEST FORK NEW FORK RIVER, NEW FORK RIVER, GREEN RIVER								
P4020.0D	DENVER DITCH	IRVIN LOZIER;	06/26/1902	IRR_SW	1.770	124	035N-109W-08-NENE	6698	CR CC20/047
	DALLY SPRING, TRIBUTARIES OF WILLOW CREEK, WEST FORK NEW FORK RIVER, NEW FORK RIVER, GREEN RIVER								
P19150.0D	FOREST PIPELINE	UNITED STATES OF AMERICA, FOREST SERVICE;	06/29/1937	DOM_SW	0.020	0	036N-109W-20-SWNW	23132	CR CC58/353
	MARSH CREEK, TRIBUTARIES OF WEST FORK NEW FORK RIVER, NEW FORK RIVER, GREEN RIVER								
P14842.0D	MARTIN DITCH	MARTIN TYLER;	08/31/1917	IRR_SW, S&D	0.880	62	036N-110W-30-SENE	16347	CR CC41/050
P15548.0D	TYLER DITCH	MARTIN TYLER;	09/06/1919	IRR_SW	1.600	112	036N-110W-19-SENE	18245	CR CC43/702
P10592.0R	MOMMY MOOSE RESERVOIR	JOHN ANSELMI ESTATE;	08/28/1997	FIS	2.630AF	0	036N-110W-05-SWNE	39588	CR CR18/048
P31942.0D	LIL' BROOK DITCH	LADONNA MCGUIRE; CINDY MCLOUGHLIN;	07/12/1998	RES	18.500	0	037N-110W-25-NESE	38246	CR CC82/322
P10695.0R	KAYLOU STOCK RESERVOIR	LADONNA KAY MCGUIRE; CINDY LOU MCLOUGHLIN;	07/12/1998	STO	1.600AF	0	037N-110W-25-NWSE	38259	CR CR15/389
P10896.0R	MARY RESERVOIR	JAMES SHAW;	08/19/1999	FIS, WET	4.870AF	0	036N-110W-05-SWSW	39499	CR CR17/220
P32726.0D	MARY DITCH	JAMES SHAW;	09/27/2000	RES	8.800	0	036N-110W-05-SWSW	39495	CR CC85/196
P32725.0D	JAMES DITCH	JAMES SHAW;	09/27/2000	RES	6.430	0	036N-110W-06-SESE	39496	CR CC85/197
P32727.0D	MOMMY MOOSE DITCH	JOHN ANSELMI ESTATE;	08/20/2001	RES	6.000	0	036N-110W-05-SWNE	39579	CR CC86/053
P32805.0D	CORRAL PIPE NO. 1	LARRY L. ADLER; SALLY BENT;	02/05/2003	STO	0.056	0	036N-110W-07-NWSE	40234	CR CC89/050
	SIGNET DRAW, TRIBUTARIES OF MARSH CREEK, WEST FORK NEW FORK RIVER, NEW FORK RIVER, GREEN RIVER								
P10207.0R	SIGNET NO. 1 RESERVOIR	DONALD KENDALL;	02/08/1995	WL	2.870AF	0	036N-110W-29-SWNW	37314	CR CR14/432
P10208.0R	SIGNET NO. 2 RESERVOIR	DONALD KENDALL;	02/08/1995	WL	8.520AF	0	036N-110W-29-NWSW	37315	CR CR14/433
P10209.0R	SIGNET NO. 3 RESERVOIR	DONALD KENDALL;	02/08/1995	WL	17.210AF	0	036N-110W-29-NESW	37316	CR CR14/434
P10291.0R	SANDHILL CRANE RESERVOIR	DONALD KENDALL;	08/14/1995	WL	12.880AF	0	036N-110W-32-NWNW	37675	CR CR15/115
P10293.0R	TRUMPETER RESERVOIR	DONALD KENDALL;	08/14/1995	WL	7.700AF	0	036N-110W-29-SESW	37676	CR CR15/116
	POCO DIABLO DRAW, TRIBUTARIES OF MARSH CREEK, WEST FORK NEW FORK RIVER, NEW FORK RIVER, GREEN RIVER								
P11712.0R	POCO DIABLO RESERVOIR	LIONEL LIEBERMAN REVOCABLE TRUST; ANN LIEBERMAN REVOCABLE TRUST;	10/11/2001	FIS, WL	10.560AF	0	036N-110W-18-SWSW	39825	CR CR18/138
	DUCK HAVEN DRAW, TRIBUTARIES OF POCO DIABLO DRAW, MARSH CREEK, WEST FORK NEW FORK RIVER, NEW FORK RIVER, GREEN RIVER								
P11711.0R	DUCK HAVEN RESERVOIR	LIONEL LIEBERMAN REVOCABLE TRUST; ANN LIEBERMAN REVOCABLE	10/11/2001	WL	3.030AF	0	036N-110W-18-SWSW	40026	CR CR18/228

Appendix M.
Small Water Project Evaluation

Contents

M.1 Scoring Categories 4
M.1.1 Watershed Benefit 4
M.1.2 Cultural Resources 4
M.1.3 Big Game 4
M.1.4 Fisheries 4
M.1.5 Land Ownership 5
M.1.6 Public Acceptability 5
M.1.7 Sage-Grouse 5
M.1.8 Sensitive Species 5
M.1.9 Shovel-Ready 6
M.1.10 Special Designated Areas 6
M.1.11 Project Sustainability 6
M.1.12 Small Water Project Program Priorities 6
M.1.13 Wetland Encroachment 7
M.1.14 Wetland Hydrology 7
M.2 Scoring Worksheets 7

Tables

Table M.1. Watershed benefit evaluation 8
Table M.2. Cultural resources evaluation 11
Table M.3. Big game evaluation 14
Table M.4. Fisheries evaluation 17
Table M.5. Land ownership 20
Table M.6. Public acceptability 23
Table M.7. Sage-grouse evaluation 26
Table M.8. Sensitive species evaluation 29
Table M.9. Shovel-ready evaluation 33
Table M.10. Special designated areas evaluation results 36
Table M.11. Project sustainability evaluation 39
Table M.12. Small water project program priorities evaluation 42
Table M.13. Wetland encroachment evaluation results 45
Table M.14. Wetland hydrology evaluation results 48

Acronyms and Abbreviations

AKA	also known as
BIA	Bureau of Indian Affairs (U.S. Department of the Interior)
BLM	Bureau of Land Management (U.S. Department of the Interior)
GIS	geographic information system
NHD	National Hydrography Dataset
NWI	National Wetland Inventory
POD	point of diversion
WGFD	Wyoming Game and Fish Department
USFS	U.S. Forest Service (U.S. Department of Agriculture)
USFWS	U.S. Fish and Wildlife Service (U.S. Department of the Interior)

This page is left intentionally blank.

M.1 Scoring Categories

A scoring matrix was developed to assist with evaluating and ranking the small water projects. The scoring matrix was divided into 14 categories. Categories were scored on a scale of 1 to 10, with 10 as the most suitable and 1 as the least suitable. Weighting factors were applied to each category based on the influence each category will have on project development; most scoring categories had a weighting factor of 1. A description of each of the categories, including the rationale for scoring, is presented below. The individual worksheets for each category are presented at the end of this appendix.

M.1.1 Watershed Benefit

The watershed benefit factor considers the potential benefits associated with implementation of the project and was evaluated based on best professional judgement. Projects were scored on a sliding scale from 1 to 10. Projects that have a positive impact to watershed function, and/or benefit a large number of people, were scored high. Projects that benefit only a small number of people and have only localized benefits were ranked low. The weighting factor was 1. Results are presented in **Table 1**.

M.1.2 Cultural Resources

The cultural resources factor was evaluated using a geographic information system (GIS). The relative location of project sites was assessed with respect to any known cultural sites recorded as:

- on the National Register of Historic Places (NRHP)
- eligible for listing
- eligibility unknown
- not eligible.

Project sites in close proximity to the aforementioned are scored 1. Project sites that are not located within or adjacent to known cultural sites are scored 10. The weighting factor was 1. Results are presented in **Table 2**.

M.1.3 Big Game

The New Fork River watershed supports abundant populations of big game animals including elk, mule deer, antelope, and moose. The watershed includes both important habitats and migratory corridors that could be impacted (positively or negatively) by proposed water projects.

The big game factor was evaluated using GIS and was included to ensure that proposed projects did not adversely impact “crucial” wildlife habitats (crucial winter and crucial winter/yearlong) or encroach upon the mule deer migratory corridor in such a way that might impede migration. Projects were ranked low (1) if they were located within these crucial habitats or within the mule deer migratory corridor, or high (10) if they were not. The weighting factor was 1. Results are presented in **Table 3**.

M.1.4 Fisheries

Scores were based on a combination of two factors: (1) Wyoming Game and Fish Department (WGFD) preliminary assessment of fisheries impacts, and (2) streamflow class. WGFD preliminarily evaluated each of the projects that directly affected a natural waterbody (i.e., Project #s 1, 8, 9, 13, 29, 31, 36, 41, 59, 66, 69, 70). In an email, WGFD offered the following assessment:

> All projects are fine and [I] don't oppose any. However I would question funding Duck Creek project as briefly described. The flood control will need good design and review prior to implementation. I would suggest working on the ditch not the creek to better control but haven't been to the site. Orcutt and Walker are lower from an aquatic standpoint. Some have more benefit to the stream and fisheries. Silver has no fisheries benefit. (Hilda Sexauer, WGFD, personal communication, May 30, 2017).

Scores of 10 were therefore assigned to each of these projects, with the exception of Project #13 (Duck Creek), which was assigned a score of 1.

Streams are classified by the National Hydrography Dataset (NHD) as perennial, intermittent, and ephemeral. For the purpose of this preliminary screening, the potential for adverse impact to the fishery is assumed to be greatest in perennial streams with year-round flow to support a fishery, and is assumed to decrease as the hydro-period decreases with intermittent and ephemeral streams. No impact is anticipated for projects that are hydrologically disconnected from surface waters. Scoring was as follows:

- Not Connected (score of 10)
- Ephemeral (score of 9)
- Intermittent (score of 5)
- Perennial (score of 1)

Scores assigned to each via WGFD preliminary assessment and NHD classification were averaged for a total fisheries score. The weighting factor was 1. Results are presented in **Table 4**.

M.1.5 Land Ownership

Land ownership was identified for each project only for informational purposes. This factor was not scored or included in the ranking. Results are presented in **Table 5**.

M.1.6 Public Acceptability

The public acceptability factor is evaluated based (1) on comments that were received during project meetings open to the public and (2) on best professional judgement. Projects were ranked on a sliding scale from low (score of 1) to high (score of 10). Projects ranked high will likely have high public support. Conversely, those that are ranked low will likely have little public support and could be actively opposed. The weighting factor was 1. Results are presented in **Table 6**.

M.1.7 Sage-Grouse

The sage-grouse factor was evaluated in GIS and is based on location of the project site relative to CORE sage-grouse habitat areas. Project sites completely outside of CORE areas were scored 10, while project sites within CORE were scored 1. The weighting factor is 1. Results are presented in **Table 7**.

M.1.8 Sensitive Species

The endangered, threatened, and sensitive species (referred to herein as “sensitive species”) occurring in the New Fork River watershed are discussed in Section 2.11.3. The sensitive species factor was evaluated in GIS by overlaying project site boundaries with the known ranges of sensitive species. Projects that are located within the known range of sensitive species were scored low (1). Projects not located within the

known ranges of sensitive species were scored high (10).The weighting factor was 1. Results are presented in **Table 8**.

M.1.9 Shovel-Ready

Shovel-ready projects include those where planning and engineering is advanced enough that with sufficient funding, construction can begin within a very short time. Projects are scored as either *yes* they are shovel-ready (score of 10), or *no* they are not shovel-ready (score of 1). This factor was especially important to the local project sponsor (Sublette County Conservation District); therefore, a weighting factor of 10 was assigned to ensure that projects ready for implementation were ranked high relative to other projects. Results are presented in **Table 9**.

M.1.10 Special Designated Areas

The special designated areas factor was evaluated in GIS. Potential results for this screening category include:

- None (score of 10)
- Designated Wilderness (score of 1)
- Wilderness Study Area (score of 5)
- Wildlife Habitat Management Area (score of 5)
- Areas of Critical Environmental Concern (score of 5)
- Special Recreation Management Area (score of 5)
- Management Area (score of 7)

Additional layers of oversight/regulation may be imposed for activities located on specially designated lands, thereby complicating project approval and implementation. A weighting factor of 1 was assigned. The results are presented in **Table 10**.

M.1.11 Project Sustainability

The project sustainability factor considers long-term maintenance and was evaluated based on best professional judgement. Projects are ranked on a sliding scale of low (score of 1) to high (score of 10). Projects ranked high will likely require little long-term maintenance and are expected to continue to function for a relatively long period of time. Conversely, projects ranked low will likely require considerable maintenance and/or will likely have only short-term benefits. The weighting factor was 1. The results are presented in **Table 11**.

M.1.12 Small Water Project Program Priorities

The *Operating Criteria of the Small Water Project Program of the Wyoming Water Development Program* specify priorities for funding projects. In order, the priorities are: (1) source water development; (2) storage; (3) pipelines, conveyance facilities, solar platforms, and windmills; (4) irrigation, and; (5) environmental. Scoring is as follows and a weighting factor of 10 was assigned:

- Source water development (score of 5)
- Storage (score of 4)
- Pipelines, conveyance facilities, solar platforms, and windmills (score of 3)
- Irrigation (score of 2)

- Environmental (score of 1)

The results are presented in **Table 12**.

M.1.13 Wetland Encroachment

The wetland encroachment factor was evaluated in GIS. Potential results for this screening category include sites entirely outside or within National Wetland Inventory (NWI) mapped wetlands. There are likely no issues associated with projects outside and hydrologically isolated from wetlands (score of 10). Projects located within NWI-mapped wetlands could result in direct impacts and require permits/approvals (score of 1). A weighting factor of 1 was assigned to this factor. The results are presented in **Table 13**.

M.1.14 Wetland Hydrology

The hydrology of approximately 60 percent of the wetlands in the New Fork River watershed might be at least partially sustained by irrigation return and/or wastewater. Projects that increase irrigation efficiency in wetland areas might reduce the water supply to existing wetlands. This could adversely affect the wetland and associated wildlife. This factor was scored on a sliding scale from 1 (greatly diminish wetland water supply) to 10 (no impact). A weighting factor of 1 was applied. The results are presented in **Table 14**.

M.2 Scoring Worksheets

Worksheets for each of the 14 scoring categories are presented in this section.

Table M.1. Watershed benefit evaluation

PROJECT	NAME	SCORE	WEIGHTED SCORE
1	Bee Line Ditch POD Rehabilitation	8	8
2	Mommy Moose Ditch Diversion Rehabilitation (AKA Marsh Creek Ditch POD Rehab)	1	1
3	Preston Ditch Rehabilitation	3	3
4	Ingle Stockwater Well Development	1	1
5	Hedrick Stockwater Well Development	1	1
6	Anselmi Stockwater Well Development	1	1
7	Steele Pivot Sprinkler (AKA Upper Field Pivot)	1	1
8	Silver Lake Dam Outlet Rehabilitation	8	8
9	Stipa Ditch POD Rehabilitation	5	5
10	Stipa Ditch Overflow Diversion Rehabilitation	5	5
11	Stipa Ditch Seepage Area Mitigation	5	5
12	Stipa Ditch Sluffing Area Mitigation	5	5
13	Duck Creek Bank Stabilization (AKA Flooding Mitigation for Stipa Ditch)	5	5
14	Highland Ditch Seepage Area “A”	8	8
15	Highland Ditch Seepage Area “B”	8	8
16	Highland Ditch Seepage Area “C”	7	7
17	Highland Ditch Seepage Area “D”	7	7
18	Highland Ditch Check Structure Rehabilitation “A”	8	8
19	Highland Ditch Check Structure Rehabilitation “B”	7	7
20	Best Ditch Conveyance Rehabilitation	6	6
21	West Fork New Fork River Bank Stabilization	1	1
22	Shriver #2 Stockwater Well Rehabilitation	1	1
23	Welborn Smith No. 1 Stockwater Well Rehabilitation	1	1
24	Horse Corral #1 Stockwater Well Rehabilitation	1	1
25	Welborn #1 Well Rehabilitation	1	1
26	Dumphy Hollow Spring Development (Stockwater)	1	1
27	Noble Place Spring Development (Stockwater)	1	1
28	Smith Place Spring Development (Stockwater)	1	1
29	E.C. Walker Ditch POD Rehabilitation	8	8
30	“The Seedings Meadow” Irrigation Conveyance Rehabilitation	1	1
31	Converse Ditch Rehabilitation	8	8

Table M.1. Watershed benefit evaluation

PROJECT	NAME	SCORE	WEIGHTED SCORE
32	Martin Reservoir (Irrigation)	1	1
33	Valerie Reservoir (Irrigation)	1	1
34	Susan Reservoir (Irrigation)	1	1
35	Annette Reservoir (Irrigation)	1	1
36	New Fork No. 2 Ditch Piping	1	1
37	Kaylou Stock Reservoir Outlet Works Rehabilitation	1	1
38	Cora Butte Stockwater Well Development (AKA CL Bar Ranch Stockwater Well “A”)	1	1
39	Thompson Butte Stockwater Well Development (AKA CL Bar Ranch Stockwater Well "B")	1	1
40	McDowell Flats Stockwater Well Development	1	1
41	Strong Ditch POD Rehabilitation	8	8
42	Marshal Bump Stockwater Well Development	1	1
43	Well Power Supply Rehabilitation	1	1
44	Brosman No. 2 Stockwater Well Development	1	1
45	Fayette Ranch Pivot Sprinkler (AKA West Field Pivot)	1	1
46	Coleman Pasture Stockwater Tank & Pipeline	1	1
47	No Man’s Land Stockwater Tank & Pipeline	1	1
48	Coleman Field Spring Development (Stockwater)	1	1
49	Miller Field Stockwater Tanks & Pipelines	1	1
50	Miller Field Stockwater Well Rehabilitation (Solar Conversion)	1	1
51	Glover Field Headgate 1	1	1
52	Glover Field Headgate 2	1	1
53	Glover Field Headgate 3	1	1
54	Glover Field Headgate 4	1	1
55	Glover Field Headgate 5	1	1
56	Glover Field Headgate 6	1	1
57	Glover Field Headgate 7	1	1
58	Section 7 (34-109) Diversion Control Structure Rehab	1	1
59	Section 12 (34-110) Diversion Control Structure Rehab	1	1
60	Section 18 (34-109) Rock Vein Check Structure Rehab	1	1
61	Section 19 (34-109) Diversion Control Structure Rehab	1	1
62	Bootjack Stockwater Well Development	1	1

Table M.1. Watershed benefit evaluation

PROJECT	NAME	SCORE	WEIGHTED SCORE
63	AA Pasture Reservoir	1	1
64	T Pasture Reservoir	1	1
65	Seedings Reservoir	1	1
66	Orcutt Ditch - Change of POD	8	8
67	Burgess Stockwater Well	1	1
68	Dave Noble Stockwater Well	1	1
69	Alexander Ditch POD Check Structure Rehab	5	5
70	New Fork Primary Check Structure Rehab	5	5

Table M.2. Cultural resources evaluation

PROJECT	NAME	NOT ELIGIBLE FOR LISTING		ELIGIBILITY UNKNOWN		ELIGIBLE FOR LISTING		LISTED IN NRHP		WEIGHTED SCORE (MINIMUM)
		Status	Score	Status	Score	Status	Score	Status	Score	
1	Bee Line Ditch POD Rehabilitation	No	10	No	10	No	10	No	10	10
2	Mommy Moose Ditch Diversion Rehabilitation (AKA Marsh Creek Ditch POD Rehab)	No	10	No	10	No	10	No	10	10
3	Preston Ditch Rehabilitation	No	10	No	10	No	10	No	10	10
4	Ingle Stockwater Well Development	No	10	No	10	No	10	No	10	10
5	Hedrick Stockwater Well Development	No	10	No	10	No	10	No	10	10
6	Anselmi Stockwater Well Development	No	10	No	10	No	10	No	10	10
7	Steele Pivot Sprinkler (AKA Upper Field Pivot)	No	10	No	10	No	10	No	10	10
8	Silver Lake Dam Outlet Rehabilitation	Yes	1	No	10	No	10	No	10	1
9	Stipa Ditch POD Rehabilitation	No	10	No	10	No	10	No	10	10
10	Stipa Ditch Overflow Diversion Rehabilitation	No	10	No	10	No	10	No	10	10
11	Stipa Ditch Seepage Area Mitigation	No	10	No	10	No	10	No	10	10
12	Stipa Ditch Sluffing Area Mitigation	No	10	No	10	No	10	No	10	10
13	Duck Creek Bank Stabilization (AKA Flooding Mitigation for Stipa Ditch)	No	10	No	10	No	10	No	10	10
14	Highland Ditch Seepage Area “A”	No	10	No	10	No	10	No	10	10
15	Highland Ditch Seepage Area “B”	No	10	No	10	No	10	No	10	10
16	Highland Ditch Seepage Area “C”	No	10	No	10	No	10	No	10	10
17	Highland Ditch Seepage Area “D”	No	10	No	10	No	10	No	10	10
18	Highland Ditch Check Structure Rehabilitation “A”	No	10	No	10	No	10	No	10	10
19	Highland Ditch Check Structure Rehabilitation “B”	No	10	No	10	No	10	No	10	10
20	Best Ditch Conveyance Rehabilitation	No	10	No	10	No	10	No	10	10
21	West Fork New Fork River Bank Stabilization	No	10	No	10	No	10	No	10	10
22	Shriver #2 Stockwater Well Rehabilitation	No	10	No	10	No	10	No	10	10
23	Welborn Smith No. 1 Stockwater Well Rehabilitation	No	10	No	10	No	10	No	10	10

Table M.2. Cultural resources evaluation

PROJECT	NAME	NOT ELIGIBLE FOR LISTING		ELIGIBILITY UNKNOWN		ELIGIBLE FOR LISTING		LISTED IN NRHP		WEIGHTED SCORE (MINIMUM)
		Status	Score	Status	Score	Status	Score	Status	Score	
24	Horse Corral #1 Stockwater Well Rehabilitation	No	10	No	10	No	10	No	10	10
25	Welborn #1 Well Rehabilitation	No	10	No	10	No	10	No	10	10
26	Dumphy Hollow Spring Development (Stockwater)	No	10	No	10	No	10	No	10	10
27	Noble Place Spring Development (Stockwater)	No	10	No	10	No	10	No	10	10
28	Smith Place Spring Development (Stockwater)	No	10	No	10	No	10	No	10	10
29	E.C. Walker Ditch POD Rehabilitation	No	10	No	10	No	10	No	10	10
30	“The Seedings Meadow” Irrigation Conveyance Rehabilitation	No	10	No	10	No	10	No	10	10
31	Converse Ditch Rehabilitation	No	10	No	10	No	10	No	10	10
32	Martin Reservoir (Irrigation)	No	10	No	10	No	10	No	10	10
33	Valerie Reservoir (Irrigation)	No	10	No	10	No	10	No	10	10
34	Susan Reservoir (Irrigation)	No	10	No	10	No	10	No	10	10
35	Annette Reservoir (Irrigation)	No	10	No	10	No	10	No	10	10
36	New Fork No. 2 Ditch Piping	No	10	No	10	No	10	No	10	10
37	Kaylou Stock Reservoir Outlet Works Rehabilitation	No	10	No	10	No	10	No	10	10
38	Cora Butte Stockwater Well Development (AKA CL Bar Ranch Stockwater Well “A”)	No	10	No	10	No	10	No	10	10
39	Thompson Butte Stockwater Well Development (AKA CL Bar Ranch Stockwater Well "B")	No	10	No	10	No	10	No	10	10
40	McDowell Flats Stockwater Well Development	No	10	No	10	No	10	No	10	10
41	Strong Ditch POD Rehabilitation	No	10	No	10	No	10	No	10	10
42	Marshal Bump Stockwater Well Development	No	10	No	10	No	10	No	10	10
43	Well Power Supply Rehabilitation	No	10	No	10	No	10	No	10	10
44	Brosman No. 2 Stockwater Well Development	No	10	No	10	No	10	No	10	10
45	Fayette Ranch Pivot Sprinkler (AKA West Field Pivot)	No	10	No	10	No	10	No	10	10
46	Coleman Pasture Stockwater Tank & Pipeline	No	10	No	10	No	10	No	10	10

Table M.2. Cultural resources evaluation

PROJECT	NAME	NOT ELIGIBLE FOR LISTING		ELIGIBILITY UNKNOWN		ELIGIBLE FOR LISTING		LISTED IN NRHP		WEIGHTED SCORE (MINIMUM)
		Status	Score	Status	Score	Status	Score	Status	Score	
47	No Man's Land Stockwater Tank & Pipeline	No	10	No	10	No	10	No	10	10
48	Coleman Field Spring Development (Stockwater)	No	10	No	10	No	10	No	10	10
49	Miller Field Stockwater Tanks & Pipelines	No	10	No	10	No	10	No	10	10
50	Miller Field Stockwater Well Rehabilitation (Solar Conversion)	No	10	No	10	No	10	No	10	10
51	Glover Field Headgate 1	No	10	No	10	No	10	No	10	10
52	Glover Field Headgate 2	No	10	No	10	No	10	No	10	10
53	Glover Field Headgate 3	No	10	No	10	No	10	No	10	10
54	Glover Field Headgate 4	No	10	No	10	No	10	No	10	10
55	Glover Field Headgate 5	No	10	No	10	No	10	No	10	10
56	Glover Field Headgate 6	No	10	No	10	No	10	No	10	10
57	Glover Field Headgate 7	No	10	No	10	No	10	No	10	10
58	Section 7 (34-109) Diversion Control Structure Rehab	No	10	No	10	No	10	No	10	10
59	Section 12 (34-110) Diversion Control Structure Rehab	No	10	No	10	No	10	No	10	10
60	Section 18 (34-109) Rock Vein Check Structure Rehab	No	10	No	10	No	10	No	10	10
61	Section 19 (34-109) Diversion Control Structure Rehab	No	10	No	10	No	10	No	10	10
62	Bootjack Stockwater Well Development	No	10	No	10	No	10	No	10	10
63	AA Pasture Reservoir	No	10	No	10	No	10	No	10	10
64	T Pasture Reservoir	No	10	No	10	No	10	No	10	10
65	Seedings Reservoir	No	10	No	10	No	10	No	10	10
66	Orcutt Ditch - Change of POD	No	10	No	10	No	10	No	10	10
67	Burgess Stockwater Well	No	10	No	10	No	10	No	10	10
68	Dave Noble Stockwater Well	No	10	No	10	No	10	No	10	10
69	Alexander Ditch POD Check Structure Rehab	No	10	No	10	No	10	No	10	10
70	New Fork Primary Check Structure Rehab	No	10	No	10	No	10	No	10	10

Table M.3. Big game evaluation

PROJECT	NAME	WINTER		YEARLONG		MIGRATION		WEIGHTED SCORE (MINIMUM)
		STATUS	SCORE	STATUS	SCORE	STATUS	SCORE	
1	Bee Line Ditch POD Rehabilitation	No	10	Yes	1	No	10	1
2	Mommy Moose Ditch Diversion Rehabilitation (AKA Marsh Creek Ditch POD Rehab)	No	10	No	10	Yes	1	1
3	Preston Ditch Rehabilitation	Yes	1	Yes	1	Yes	1	1
4	Ingle Stockwater Well Development	No	10	No	10	Yes	1	1
5	Hedrick Stockwater Well Development	No	10	No	10	Yes	1	1
6	Anselmi Stockwater Well Development	No	10	No	10	Yes	1	1
7	Steele Pivot Sprinkler (AKA Upper Field Pivot)	No	10	No	10	No	10	10
8	Silver Lake Dam Outlet Rehabilitation	No	10	No	10	No	10	10
9	Stipa Ditch POD Rehabilitation	No	10	Yes	1	Yes	1	1
10	Stipa Ditch Overflow Diversion Rehabilitation	No	10	Yes	1	Yes	1	1
11	Stipa Ditch Seepage Area Mitigation	Yes	1	Yes	1	Yes	1	1
12	Stipa Ditch Sluffing Area Mitigation	No	10	Yes	1	Yes	1	1
13	Duck Creek Bank Stabilization (AKA Flooding Mitigation for Stipa Ditch)	No	10	Yes	1	Yes	1	1
14	Highland Ditch Seepage Area “A”	Yes	1	No	10	Yes	1	1
15	Highland Ditch Seepage Area “B”	No	10	No	10	No	10	10
16	Highland Ditch Seepage Area “C”	No	10	No	10	Yes	1	1
17	Highland Ditch Seepage Area “D”	No	10	No	10	No	10	10
18	Highland Ditch Check Structure Rehabilitation “A”	No	10	No	10	No	10	10
19	Highland Ditch Check Structure Rehabilitation “B”	No	10	No	10	No	10	10
20	Best Ditch Conveyance Rehabilitation	No	10	No	10	No	10	10
21	West Fork New Fork River Bank Stabilization	No	10	Yes	1	No	10	1
22	Shriver #2 Stockwater Well Rehabilitation	No	10	Yes	1	No	10	1
23	Welborn Smith No. 1 Stockwater Well Rehabilitation	No	10	No	10	Yes	1	1
24	Horse Corral #1 Stockwater Well Rehabilitation	No	10	Yes	1	No	10	1
25	Welborn #1 Well Rehabilitation	No	10	Yes	1	No	10	1
26	Dumphy Hollow Spring Development (Stockwater)	No	10	No	10	Yes	1	1

Table M.3. Big game evaluation

PROJECT	NAME	WINTER		YEARLONG		MIGRATION		WEIGHTED SCORE (MINIMUM)
		STATUS	SCORE	STATUS	SCORE	STATUS	SCORE	
27	Noble Place Spring Development (Stockwater)	No	10	No	10	Yes	1	1
28	Smith Place Spring Development (Stockwater)	No	10	No	10	Yes	1	1
29	E.C. Walker Ditch POD Rehabilitation	No	10	Yes	1	Yes	1	1
30	“The Seedings Meadow” Irrigation Conveyance Rehabilitation	No	10	Yes	1	Yes	1	1
31	Converse Ditch Rehabilitation	No	10	Yes	1	No	10	1
32	Martin Reservoir (Irrigation)	No	10	Yes	1	Yes	1	1
33	Valerie Reservoir (Irrigation)	No	10	Yes	1	Yes	1	1
34	Susan Reservoir (Irrigation)	No	10	Yes	1	Yes	1	1
35	Annette Reservoir (Irrigation)	No	10	Yes	1	Yes	1	1
36	New Fork No. 2 Ditch Piping	No	10	Yes	1	Yes	1	1
37	Kaylou Stock Reservoir Outlet Works Rehabilitation	No	10	Yes	1	No	10	1
38	Cora Butte Stockwater Well Development (AKA CL Bar Ranch Stockwater Well “A”)	No	10	No	10	Yes	1	1
39	Thompson Butte Stockwater Well Development (AKA CL Bar Ranch Stockwater Well "B")	No	10	No	10	No	10	10
40	McDowell Flats Stockwater Well Development	No	10	No	10	Yes	1	1
41	Strong Ditch POD Rehabilitation	No	10	Yes	1	No	10	1
42	Marshal Bump Stockwater Well Development	No	10	No	10	No	10	10
43	Well Power Supply Rehabilitation	No	10	No	10	No	10	10
44	Brosman No. 2 Stockwater Well Development	Yes	1	Yes	1	Yes	1	1
45	Fayette Ranch Pivot Sprinkler (AKA West Field Pivot)	No	10	No	10	No	10	10
46	Coleman Pasture Stockwater Tank & Pipeline	No	10	No	10	No	10	10
47	No Man’s Land Stockwater Tank & Pipeline	No	10	No	10	No	10	10
48	Coleman Field Spring Development (Stockwater)	Yes	1	No	10	No	10	1
49	Miller Field Stockwater Tanks & Pipelines	No	10	Yes	1	No	10	1
50	Miller Field Stockwater Well Rehabilitation (Solar Conversion)	No	10	Yes	1	No	10	1
51	Glover Field Headgate 1	Yes	1	Yes	1	No	10	1
52	Glover Field Headgate 2	Yes	1	Yes	1	No	10	1

Table M.3. Big game evaluation

PROJECT	NAME	WINTER		YEARLONG		MIGRATION		WEIGHTED SCORE (MINIMUM)
		STATUS	SCORE	STATUS	SCORE	STATUS	SCORE	
53	Glover Field Headgate 3	Yes	1	Yes	1	No	10	1
54	Glover Field Headgate 4	No	10	Yes	1	No	10	1
55	Glover Field Headgate 5	No	10	Yes	1	No	10	1
56	Glover Field Headgate 6	No	10	Yes	1	No	10	1
57	Glover Field Headgate 7	No	10	Yes	1	No	10	1
58	Section 7 (34-109) Diversion Control Structure Rehab	No	10	Yes	1	No	10	1
59	Section 12 (34-110) Diversion Control Structure Rehab	No	10	Yes	1	No	10	1
60	Section 18 (34-109) Rock Vein Check Structure Rehab	No	10	Yes	1	No	10	1
61	Section 19 (34-109) Diversion Control Structure Rehab	No	10	Yes	1	No	10	1
62	Bootjack Stockwater Well Development	No	10	Yes	1	No	10	1
63	AA Pasture Reservoir	No	10	No	10	Yes	1	1
64	T Pasture Reservoir	No	10	Yes	1	Yes	1	1
65	Seedings Reservoir	No	10	No	10	Yes	1	1
66	Orcutt Ditch - Change of POD	No	10	No	10	No	10	10
67	Burgess Stockwater Well	No	10	No	10	Yes	1	1
68	Dave Noble Stockwater Well	No	10	No	10	No	10	10
69	Alexander Ditch POD Check Structure Rehab	No	10	Yes	1	No	10	1
70	New Fork Primary Check Structure Rehab	No	10	Yes	1	No	10	1

Table M.4. Fisheries evaluation

PROJECT	NAME	ON CHANNEL?	AFFECTED WATERBODY	WGFD CONCERN		STREAMFLOW CLASS		AVERAGE SCORE
				RESULT	SCORE	RESULT	SCORE	
1	Bee Line Ditch POD Rehabilitation	Yes	New Fork River	NC	10	Perennial	1	6
2	Mommy Moose Ditch Diversion Rehabilitation (AKA Marsh Creek Ditch POD Rehab)	No	NA	NC	10	NHC	10	10
3	Preston Ditch Rehabilitation	No	NA	NC	10	NHC	10	10
4	Ingle Stockwater Well Development	No	NA	NC	10	NHC	10	10
5	Hedrick Stockwater Well Development	No	NA	NC	10	NHC	10	10
6	Anselmi Stockwater Well Development	No	NA	NC	10	NHC	10	10
7	Steele Pivot Sprinkler (AKA Upper Field Pivot)	No	NA	NC	10	NHC	10	10
8	Silver Lake Dam Outlet Rehabilitation	Yes	North Fork Silver Creek, Silver Lake	NC	10	Perennial	1	6
9	Stipa Ditch POD Rehabilitation	Yes	New Fork River	NC	10	Perennial	1	6
10	Stipa Ditch Overflow Diversion Rehabilitation	No	NA	NC	10	NHC	10	10
11	Stipa Ditch Seepage Area Mitigation	No	NA	NC	10	NHC	10	10
12	Stipa Ditch Sluffing Area Mitigation	No	NA	NC	10	NHC	10	10
13	Duck Creek Bank Stabilization (AKA Flooding Mitigation for Stipa Ditch)	Yes	Duck Creek	High	1	Perennial	1	1
14	Highland Ditch Seepage Area “A”	No	NA	NC	10	NHC	10	10
15	Highland Ditch Seepage Area “B”	No	NA	NC	10	NHC	10	10
16	Highland Ditch Seepage Area “C”	No	NA	NC	10	NHC	10	10
17	Highland Ditch Seepage Area “D”	No	NA	NC	10	NHC	10	10
18	Highland Ditch Check Structure Rehabilitation “A”	No	NA	NC	10	NHC	10	10
19	Highland Ditch Check Structure Rehabilitation “B”	No	NA	NC	10	NHC	10	10
20	Best Ditch Conveyance Rehabilitation	No	NA	NC	10	NHC	10	10
21	West Fork New Fork River Bank Stabilization	No	NA	NC	10	NHC	10	10
22	Shriver #2 Stockwater Well Rehabilitation	No	NA	NC	10	NHC	10	10
23	Welborn Smith No. 1 Stockwater Well Rehabilitation	No	NA	NC	10	NHC	10	10

Table M.4. Fisheries evaluation

PROJECT	NAME	ON CHANNEL?	AFFECTED WATERBODY	WGFD CONCERN		STREAMFLOW CLASS		AVERAGE SCORE
				RESULT	SCORE	RESULT	SCORE	
24	Horse Corral #1 Stockwater Well Rehabilitation	No	NA	NC	10	NHC	10	10
25	Welborn #1 Well Rehabilitation	No	NA	NC	10	NHC	10	10
26	Dumphy Hollow Spring Development (Stockwater)	No	NA	NC	10	NHC	10	10
27	Noble Place Spring Development (Stockwater)	No	NA	NC	10	NHC	10	10
28	Smith Place Spring Development (Stockwater)	No	NA	NC	10	NHC	10	10
29	E.C. Walker Ditch POD Rehabilitation	Yes	Willow Creek	NC	10	Perennial	1	6
30	“The Seedings Meadow” Irrigation Conveyance Rehabilitation	No	NA	NC	10	NHC	10	10
31	Converse Ditch Rehabilitation	Yes	New Fork River	NC	10	Intermittent	5	8
32	Martin Reservoir (Irrigation)	No	NA	NC	10	NHC	10	10
33	Valerie Reservoir (Irrigation)	No	NA	NC	10	NHC	10	10
34	Susan Reservoir (Irrigation)	No	NA	NC	10	NHC	10	10
35	Annette Reservoir (Irrigation)	No	NA	NC	10	NHC	10	10
36	New Fork No. 2 Ditch Piping	Yes	New Fork River	NC	10	Perennial	1	6
37	Kaylou Stock Reservoir Outlet Works Rehabilitation	No	NA	NC	10	NHC	10	10
38	Cora Butte Stockwater Well Development (AKA CL Bar Ranch Stockwater Well “A”)	No	NA	NC	10	NHC	10	10
39	Thompson Butte Stockwater Well Development (AKA CL Bar Ranch Stockwater Well "B")	No	NA	NC	10	NHC	10	10
40	McDowell Flats Stockwater Well Development	No	NA	NC	10	NHC	10	10
41	Strong Ditch POD Rehabilitation	Yes	New Fork River	NC	10	Perennial	1	6
42	Marshal Bump Stockwater Well Development	No	NA	NC	10	NHC	10	10
43	Well Power Supply Rehabilitation	No	NA	NC	10	NHC	10	10
44	Brosman No. 2 Stockwater Well Development	No	NA	NC	10	NHC	10	10
45	Fayette Ranch Pivot Sprinkler (AKA West Field Pivot)	No	NA	NC	10	NHC	10	10
46	Coleman Pasture Stockwater Tank & Pipeline	No	NA	NC	10	NHC	10	10
47	No Man’s Land Stockwater Tank & Pipeline	No	NA	NC	10	NHC	10	10

Table M.4. Fisheries evaluation

PROJECT	NAME	ON CHANNEL?	AFFECTED WATERBODY	WGFD CONCERN		STREAMFLOW CLASS		AVERAGE SCORE
				RESULT	SCORE	RESULT	SCORE	
48	Coleman Field Spring Development (Stockwater)	No	NA	NC	10	NHC	10	10
49	Miller Field Stockwater Tanks & Pipelines	No	NA	NC	10	NHC	10	10
50	Miller Field Stockwater Well Rehabilitation (Solar Conversion)	No	NA	NC	10	NHC	10	10
51	Glover Field Headgate 1	No	NA	NC	10	NHC	10	10
52	Glover Field Headgate 2	No	NA	NC	10	NHC	10	10
53	Glover Field Headgate 3	No	NA	NC	10	NHC	10	10
54	Glover Field Headgate 4	No	NA	NC	10	NHC	10	10
55	Glover Field Headgate 5	No	NA	NC	10	NHC	10	10
56	Glover Field Headgate 6	No	NA	NC	10	NHC	10	10
57	Glover Field Headgate 7	No	NA	NC	10	NHC	10	10
58	Section 7 (34-109) Diversion Control Structure Rehab	No	NA	NC	10	NHC	10	10
59	Section 12 (34-110) Diversion Control Structure Rehab	Yes	Willow Creek	NC	10	Perennial	1	6
60	Section 18 (34-109) Rock Vein Check Structure Rehab	No	NA	NC	10	NHC	10	10
61	Section 19 (34-109) Diversion Control Structure Rehab	No	NA	NC	10	NHC	10	10
62	Bootjack Stockwater Well Development	No	NA	NC	10	NHC	10	10
63	AA Pasture Reservoir	Yes	NA	NC	10	Perennial	1	6
64	T Pasture Reservoir	No	NA	NC	10	NHC	10	10
65	Seedings Reservoir	No	NA	NC	10	NHC	10	10
66	Orcutt Ditch - Change of POD	Yes	Pine Creek	NC	10	Perennial	1	6
67	Burgess Stockwater Well	No	NA	NC	10	NHC	10	10
68	Dave Noble Stockwater Well	No	NA	NC	10	NHC	10	10
69	Alexander Ditch POD Check Structure Rehab	Yes	New Fork River	NC	10	Perennial	1	6
70	New Fork Primary Check Structure Rehab	Yes	New Fork River	NC	10	Perennial	1	6

Notes: NA = not applicable; NC = no concern; NHC = no hydrological connection.

Table M.5. Land ownership

PROJECT	NAME	PRIVATE	BIA	STATE	USFS	BLM	USFWS
1	Bee Line Ditch POD Rehabilitation	Yes	No	No	No	No	No
2	Mommy Moose Ditch Diversion Rehabilitation (AKA Marsh Creek Ditch POD Rehab)	No	No	No	No	Yes	No
3	Preston Ditch Rehabilitation	Yes	No	Yes	Yes	Yes	No
4	Ingle Stockwater Well Development	Yes	No	No	No	No	No
5	Hedrick Stockwater Well Development	Yes	No	No	No	No	No
6	Anselmi Stockwater Well Development	Yes	No	No	No	No	No
7	Steele Pivot Sprinkler (AKA Upper Field Pivot)	Yes	No	No	No	No	No
8	Silver Lake Dam Outlet Rehabilitation	No	No	No	Yes	No	No
9	Stipa Ditch POD Rehabilitation	Yes	No	No	No	No	No
10	Stipa Ditch Overflow Diversion Rehabilitation	Yes	No	No	No	No	No
11	Stipa Ditch Seepage Area Mitigation	Yes	No	No	No	Yes	No
12	Stipa Ditch Sluffing Area Mitigation	Yes	No	No	No	No	No
13	Duck Creek Bank Stabilization (AKA Flooding Mitigation for Stipa Ditch)	Yes	No	No	No	No	No
14	Highland Ditch Seepage Area “A”	Yes	No	No	No	No	No
15	Highland Ditch Seepage Area “B”	Yes	No	No	No	Yes	No
16	Highland Ditch Seepage Area “C”	Yes	No	Yes	No	No	No
17	Highland Ditch Seepage Area “D”	Yes	No	No	No	No	No
18	Highland Ditch Check Structure Rehabilitation “A”	Yes	No	No	No	No	No
19	Highland Ditch Check Structure Rehabilitation “B”	Yes	No	No	No	No	No
20	Best Ditch Conveyance Rehabilitation	Yes	No	No	No	No	No
21	West Fork New Fork River Bank Stabilization	Yes	No	No	No	No	No
22	Shriver #2 Stockwater Well Rehabilitation	Yes	No	No	No	No	No
23	Welborn Smith No. 1 Stockwater Well Rehabilitation	Yes	No	No	No	No	No
24	Horse Corral #1 Stockwater Well Rehabilitation	Yes	No	No	No	No	No
25	Welborn #1 Well Rehabilitation	No	No	Yes	No	No	No
26	Dumphy Hollow Spring Development (Stockwater)	Yes	No	No	No	No	No
27	Noble Place Spring Development (Stockwater)	Yes	No	No	No	No	No
28	Smith Place Spring Development (Stockwater)	Yes	No	No	No	No	No

Table M.5. Land ownership

PROJECT	NAME	PRIVATE	BIA	STATE	USFS	BLM	USFWS
29	E.C. Walker Ditch POD Rehabilitation	Yes	No	No	No	No	No
30	“The Seedings Meadow” Irrigation Conveyance Rehabilitation	Yes	No	No	No	No	No
31	Converse Ditch Rehabilitation	Yes	No	No	No	No	No
32	Martin Reservoir (Irrigation)	Yes	No	No	No	No	No
33	Valerie Reservoir (Irrigation)	Yes	No	No	No	No	No
34	Susan Reservoir (Irrigation)	Yes	No	No	No	No	No
35	Annette Reservoir (Irrigation)	Yes	No	No	No	No	No
36	New Fork No. 2 Ditch Piping	Yes	No	No	Yes	No	No
37	Kaylou Stock Reservoir Outlet Works Rehabilitation	Yes	No	No	No	No	No
38	Cora Butte Stockwater Well Development (AKA CL Bar Ranch Stockwater Well “A”)	Yes	No	No	No	No	No
39	Thompson Butte Stockwater Well Development (AKA CL Bar Ranch Stockwater Well "B")	No	No	No	No	No	No
40	McDowell Flats Stockwater Well Development	Yes	No	No	Yes	No	No
41	Strong Ditch POD Rehabilitation	Yes	No	No	No	No	No
42	Marshal Bump Stockwater Well Development	Yes	No	No	No	No	No
43	Well Power Supply Rehabilitation	Yes	No	No	No	No	No
44	Brosman No. 2 Stockwater Well Development	Yes	No	No	No	No	No
45	Fayette Ranch Pivot Sprinkler (AKA West Field Pivot)	Yes	No	No	No	No	No
46	Coleman Pasture Stockwater Tank & Pipeline	Yes	No	No	No	No	No
47	No Man’s Land Stockwater Tank & Pipeline	Yes	No	No	No	No	No
48	Coleman Field Spring Development (Stockwater)	Yes	No	No	No	No	No
49	Miller Field Stockwater Tanks & Pipelines	Yes	No	No	No	No	No
50	Miller Field Stockwater Well Rehabilitation (Solar Conversion)	Yes	No	No	No	No	No
51	Glover Field Headgate 1	Yes	No	No	No	No	No
52	Glover Field Headgate 2	Yes	No	No	No	No	No
53	Glover Field Headgate 3	Yes	No	No	No	No	No
54	Glover Field Headgate 4	Yes	No	No	No	No	No
55	Glover Field Headgate 5	Yes	No	No	No	No	No

Table M.5. Land ownership

PROJECT	NAME	PRIVATE	BIA	STATE	USFS	BLM	USFWS
56	Glover Field Headgate 6	Yes	No	No	No	No	No
57	Glover Field Headgate 7	Yes	No	No	No	No	No
58	Section 7 (34-109) Diversion Control Structure Rehab	Yes	No	No	No	No	No
59	Section 12 (34-110) Diversion Control Structure Rehab	Yes	No	No	No	No	No
60	Section 18 (34-109) Rock Vein Check Structure Rehab	Yes	No	No	No	No	No
61	Section 19 (34-109) Diversion Control Structure Rehab	Yes	No	No	No	No	No
62	Bootjack Stockwater Well Development	Yes	No	No	No	No	No
63	AA Pasture Reservoir	Yes	No	No	No	No	No
64	T Pasture Reservoir	Yes	No	No	No	No	No
65	Seedings Reservoir	Yes	No	No	No	No	No
66	Orcutt Ditch - Change of POD	Yes	No	No	No	No	No
67	Burgess Stockwater Well	Yes	No	No	No	No	No
68	Dave Noble Stockwater Well	No	No	No	No	No	No
69	Alexander Ditch POD Check Structure Rehab	Yes	No	No	No	No	No
70	New Fork Primary Check Structure Rehab	Yes	No	No	No	No	No

Table M.6. Public acceptability

PROJECT	NAME	SCORE	WEIGHTED SCORE
1	Bee Line Ditch POD Rehabilitation	5	5
2	Mommy Moose Ditch Diversion Rehabilitation (AKA Marsh Creek Ditch POD Rehab)	5	5
3	Preston Ditch Rehabilitation	5	5
4	Ingle Stockwater Well Development	5	5
5	Hedrick Stockwater Well Development	5	5
6	Anselmi Stockwater Well Development	5	5
7	Steele Pivot Sprinkler (AKA Upper Field Pivot)	5	5
8	Silver Lake Dam Outlet Rehabilitation	5	5
9	Stipa Ditch POD Rehabilitation	5	5
10	Stipa Ditch Overflow Diversion Rehabilitation	5	5
11	Stipa Ditch Seepage Area Mitigation	5	5
12	Stipa Ditch Sluffing Area Mitigation	5	5
13	Duck Creek Bank Stabilization (AKA Flooding Mitigation for Stipa Ditch)	5	5
14	Highland Ditch Seepage Area “A”	5	5
15	Highland Ditch Seepage Area “B”	5	5
16	Highland Ditch Seepage Area “C”	5	5
17	Highland Ditch Seepage Area “D”	5	5
18	Highland Ditch Check Structure Rehabilitation “A”	5	5
19	Highland Ditch Check Structure Rehabilitation “B”	5	5
20	Best Ditch Conveyance Rehabilitation	5	5
21	West Fork New Fork River Bank Stabilization	5	5
22	Shriver #2 Stockwater Well Rehabilitation	5	5
23	Welborn Smith No. 1 Stockwater Well Rehabilitation	5	5
24	Horse Corral #1 Stockwater Well Rehabilitation	5	5
25	Welborn #1 Well Rehabilitation	5	5
26	Dumphy Hollow Spring Development (Stockwater)	5	5
27	Noble Place Spring Development (Stockwater)	5	5
28	Smith Place Spring Development (Stockwater)	5	5
29	E.C. Walker Ditch POD Rehabilitation	5	5
30	“The Seedings Meadow” Irrigation Conveyance Rehabilitation	5	5
31	Converse Ditch Rehabilitation	5	5

Table M.6. Public acceptability

PROJECT	NAME	SCORE	WEIGHTED SCORE
32	Martin Reservoir (Irrigation)	5	5
33	Valerie Reservoir (Irrigation)	5	5
34	Susan Reservoir (Irrigation)	5	5
35	Annette Reservoir (Irrigation)	5	5
36	New Fork No. 2 Ditch Piping	5	5
37	Kaylou Stock Reservoir Outlet Works Rehabilitation	5	5
38	Cora Butte Stockwater Well Development (AKA CL Bar Ranch Stockwater Well “A”)	5	5
39	Thompson Butte Stockwater Well Development (AKA CL Bar Ranch Stockwater Well "B")	5	5
40	McDowell Flats Stockwater Well Development	5	5
41	Strong Ditch POD Rehabilitation	5	5
42	Marshal Bump Stockwater Well Development	5	5
43	Well Power Supply Rehabilitation	5	5
44	Brosman No. 2 Stockwater Well Development	5	5
45	Fayette Ranch Pivot Sprinkler (AKA West Field Pivot)	5	5
46	Coleman Pasture Stockwater Tank & Pipeline	5	5
47	No Man’s Land Stockwater Tank & Pipeline	5	5
48	Coleman Field Spring Development (Stockwater)	5	5
49	Miller Field Stockwater Tanks & Pipelines	5	5
50	Miller Field Stockwater Well Rehabilitation (Solar Conversion)	5	5
51	Glover Field Headgate 1	5	5
52	Glover Field Headgate 2	5	5
53	Glover Field Headgate 3	5	5
54	Glover Field Headgate 4	5	5
55	Glover Field Headgate 5	5	5
56	Glover Field Headgate 6	5	5
57	Glover Field Headgate 7	5	5
58	Section 7 (34-109) Diversion Control Structure Rehab	5	5
59	Section 12 (34-110) Diversion Control Structure Rehab	5	5
60	Section 18 (34-109) Rock Vein Check Structure Rehab	5	5
61	Section 19 (34-109) Diversion Control Structure Rehab	5	5
62	Bootjack Stockwater Well Development	5	5

Table M.6. Public acceptability

PROJECT	NAME	SCORE	WEIGHTED SCORE
63	AA Pasture Reservoir	5	5
64	T Pasture Reservoir	5	5
65	Seedings Reservoir	5	5
66	Orcutt Ditch - Change of POD	5	5
67	Burgess Stockwater Well	5	5
68	Dave Noble Stockwater Well	5	5
69	Alexander Ditch POD Check Structure Rehab	5	5
70	New Fork Primary Check Structure Rehab	5	5

Table M.7. Sage-grouse evaluation

PROJECT	NAME	RESULT	SCORE	WEIGHTED SCORE
1	Bee Line Ditch POD Rehabilitation	Inside	1	1
2	Mommy Moose Ditch Diversion Rehabilitation (AKA Marsh Creek Ditch POD Rehab)	Outside	10	10
3	Preston Ditch Rehabilitation	Inside	1	1
4	Ingle Stockwater Well Development	Inside	1	1
5	Hedrick Stockwater Well Development	Inside	1	1
6	Anselmi Stockwater Well Development	Inside	1	1
7	Steele Pivot Sprinkler (AKA Upper Field Pivot)	Inside	1	1
8	Silver Lake Dam Outlet Rehabilitation	Outside	10	10
9	Stipa Ditch POD Rehabilitation	Outside	10	10
10	Stipa Ditch Overflow Diversion Rehabilitation	Outside	10	10
11	Stipa Ditch Seepage Area Mitigation	Outside	10	10
12	Stipa Ditch Sluffing Area Mitigation	Outside	10	10
13	Duck Creek Bank Stabilization (AKA Flooding Mitigation for Stipa Ditch)	Outside	10	10
14	Highland Ditch Seepage Area “A”	Outside	10	10
15	Highland Ditch Seepage Area “B”	Outside	10	10
16	Highland Ditch Seepage Area “C”	Outside	10	10
17	Highland Ditch Seepage Area “D”	Inside	1	1
18	Highland Ditch Check Structure Rehabilitation “A”	Outside	10	10
19	Highland Ditch Check Structure Rehabilitation “B”	Outside	10	10
20	Best Ditch Conveyance Rehabilitation	Outside	10	10
21	West Fork New Fork River Bank Stabilization	Outside	10	10
22	Shriver #2 Stockwater Well Rehabilitation	Inside	1	1
23	Welborn Smith No. 1 Stockwater Well Rehabilitation	Inside	1	1
24	Horse Corral #1 Stockwater Well Rehabilitation	Inside	1	1
25	Welborn #1 Well Rehabilitation	Inside	1	1
26	Dumphy Hollow Spring Development (Stockwater)	Inside	1	1
27	Noble Place Spring Development (Stockwater)	Inside	1	1
28	Smith Place Spring Development (Stockwater)	Inside	1	1
29	E.C. Walker Ditch POD Rehabilitation	Inside	1	1
30	“The Seedings Meadow” Irrigation Conveyance Rehabilitation	Inside	1	1
31	Converse Ditch Rehabilitation	Inside	1	1

Table M.7. Sage-grouse evaluation

PROJECT	NAME	RESULT	SCORE	WEIGHTED SCORE
32	Martin Reservoir (Irrigation)	Outside	10	10
33	Valerie Reservoir (Irrigation)	Outside	10	10
34	Susan Reservoir (Irrigation)	Outside	10	10
35	Annette Reservoir (Irrigation)	Outside	10	10
36	New Fork No. 2 Ditch Piping	Outside	10	10
37	Kaylou Stock Reservoir Outlet Works Rehabilitation	Outside	10	10
38	Cora Butte Stockwater Well Development (AKA CL Bar Ranch Stockwater Well “A”)	Inside	1	1
39	Thompson Butte Stockwater Well Development (AKA CL Bar Ranch Stockwater Well "B")	Outside	10	10
40	McDowell Flats Stockwater Well Development	Outside	10	10
41	Strong Ditch POD Rehabilitation	Inside	1	1
42	Marshal Bump Stockwater Well Development	Inside	1	1
43	Well Power Supply Rehabilitation	Inside	1	1
44	Brosman No. 2 Stockwater Well Development	Outside	10	10
45	Fayette Ranch Pivot Sprinkler (AKA West Field Pivot)	Outside	10	10
46	Coleman Pasture Stockwater Tank & Pipeline	Inside	1	1
47	No Man’s Land Stockwater Tank & Pipeline	Inside	1	1
48	Coleman Field Spring Development (Stockwater)	Inside	1	1
49	Miller Field Stockwater Tanks & Pipelines	Inside	1	1
50	Miller Field Stockwater Well Rehabilitation (Solar Conversion)	Inside	1	1
51	Glover Field Headgate 1	Inside	1	1
52	Glover Field Headgate 2	Inside	1	1
53	Glover Field Headgate 3	Inside	1	1
54	Glover Field Headgate 4	Inside	1	1
55	Glover Field Headgate 5	Inside	1	1
56	Glover Field Headgate 6	Inside	1	1
57	Glover Field Headgate 7	Inside	1	1
58	Section 7 (34-109) Diversion Control Structure Rehab	Inside	1	1
59	Section 12 (34-110) Diversion Control Structure Rehab	Inside	1	1
60	Section 18 (34-109) Rock Vein Check Structure Rehab	Inside	1	1
61	Section 19 (34-109) Diversion Control Structure Rehab	Inside	1	1
62	Bootjack Stockwater Well Development	Inside	1	1

Table M.7. Sage-grouse evaluation

PROJECT	NAME	RESULT	SCORE	WEIGHTED SCORE
63	AA Pasture Reservoir	Inside	1	1
64	T Pasture Reservoir	Outside	10	10
65	Seedings Reservoir	Inside	1	1
66	Orcutt Ditch - Change of POD	Outside	10	10
67	Burgess Stockwater Well	Outside	10	10
68	Dave Noble Stockwater Well	Outside	10	10
69	Alexander Ditch POD Check Structure Rehab	Inside	1	1
70	New Fork Primary Check Structure Rehab	Inside	1	1

Table M.8. Sensitive species evaluation

PROJECT	NAME	WY TIER 1		BLM SENSITIVE		USFS SENSITIVE		THREATENED		ENDANGERED		WEIGHTED SCORE (MINIMUM)
		STATUS	SCORE	STATUS	SCORE	STATUS	SCORE	STATUS	SCORE	STATUS	SCORE	
1	Bee Line Ditch POD Rehabilitation	Yes	5	Yes	5	Yes	5	No	10	No	10	5
2	Mommy Moose Ditch Diversion Rehabilitation (AKA Marsh Creek Ditch POD Rehab)	Yes	5	Yes	5	Yes	5	No	10	No	10	5
3	Preston Ditch Rehabilitation	Yes	5	Yes	5	Yes	5	No	10	No	10	5
4	Ingle Stockwater Well Development	Yes	5	Yes	5	Yes	5	No	10	No	10	5
5	Hedrick Stockwater Well Development	Yes	5	Yes	5	Yes	5	No	10	No	10	5
6	Anselmi Stockwater Well Development	Yes	5	Yes	5	Yes	5	No	10	No	10	5
7	Steele Pivot Sprinkler (AKA Upper Field Pivot)	Yes	5	Yes	5	Yes	5	No	10	No	10	5
8	Silver Lake Dam Outlet Rehabilitation	No	10	Yes	5	Yes	5	No	10	No	10	5
9	Stipa Ditch POD Rehabilitation	Yes	5	Yes	5	Yes	5	No	10	No	10	5
10	Stipa Ditch Overflow Diversion Rehabilitation	Yes	5	Yes	5	Yes	5	No	10	No	10	5
11	Stipa Ditch Seepage Area Mitigation	Yes	5	Yes	5	Yes	5	No	10	No	10	5
12	Stipa Ditch Sluffing Area Mitigation	Yes	5	Yes	5	Yes	5	No	10	No	10	5
13	Duck Creek Bank Stabilization (AKA Flooding Mitigation for Stipa Ditch)	Yes	5	Yes	5	Yes	5	No	10	No	10	5
14	Highland Ditch Seepage Area “A”	Yes	5	Yes	5	Yes	5	No	10	No	10	5
15	Highland Ditch Seepage Area “B”	Yes	5	Yes	5	Yes	5	No	10	No	10	5
16	Highland Ditch Seepage Area “C”	Yes	5	Yes	5	Yes	5	No	10	No	10	5
17	Highland Ditch Seepage Area “D”	Yes	5	Yes	5	Yes	5	No	10	No	10	5
18	Highland Ditch Check Structure Rehabilitation “A”	Yes	5	Yes	5	Yes	5	No	10	No	10	5
19	Highland Ditch Check Structure Rehabilitation “B”	Yes	5	Yes	5	Yes	5	No	10	No	10	5
20	Best Ditch Conveyance Rehabilitation	Yes	5	Yes	5	Yes	5	No	10	No	10	5
21	West Fork New Fork River Bank Stabilization	Yes	5	Yes	5	Yes	5	No	10	No	10	5

Table M.8. Sensitive species evaluation

PROJECT	NAME	WY TIER 1		BLM SENSITIVE		USFS SENSITIVE		THREATENED		ENDANGERED		WEIGHTED SCORE (MINIMUM)
		STATUS	SCORE	STATUS	SCORE	STATUS	SCORE	STATUS	SCORE	STATUS	SCORE	
22	Shriver #2 Stockwater Well Rehabilitation	No	10	Yes	5	Yes	5	No	10	No	10	5
23	Welborn Smith No. 1 Stockwater Well Rehabilitation	Yes	5	Yes	5	Yes	5	No	10	No	10	5
24	Horse Corral #1 Stockwater Well Rehabilitation	Yes	5	Yes	5	Yes	5	No	10	No	10	5
25	Welborn #1 Well Rehabilitation	Yes	5	Yes	5	Yes	5	No	10	No	10	5
26	Dumphy Hollow Spring Development (Stockwater)	Yes	5	Yes	5	Yes	5	No	10	No	10	5
27	Noble Place Spring Development (Stockwater)	Yes	5	Yes	5	Yes	5	No	10	No	10	5
28	Smith Place Spring Development (Stockwater)	Yes	5	Yes	5	Yes	5	No	10	No	10	5
29	E.C. Walker Ditch POD Rehabilitation	Yes	5	Yes	5	Yes	5	No	10	No	10	5
30	“The Seedings Meadow” Irrigation Conveyance Rehabilitation	Yes	5	Yes	5	Yes	5	No	10	No	10	5
31	Converse Ditch Rehabilitation	Yes	5	Yes	5	Yes	5	No	10	No	10	5
32	Martin Reservoir (Irrigation)	Yes	5	Yes	5	Yes	5	No	10	No	10	5
33	Valerie Reservoir (Irrigation)	Yes	5	Yes	5	Yes	5	No	10	No	10	5
34	Susan Reservoir (Irrigation)	Yes	5	Yes	5	Yes	5	No	10	No	10	5
35	Annette Reservoir (Irrigation)	Yes	5	Yes	5	Yes	5	No	10	No	10	5
36	New Fork No. 2 Ditch Piping	Yes	5	Yes	5	Yes	5	No	10	No	10	5
37	Kaylou Stock Reservoir Outlet Works Rehabilitation	No	10	No	10	No	10	No	10	No	10	10
38	Cora Butte Stockwater Well Development (AKA CL Bar Ranch Stockwater Well “A”)	Yes	5	Yes	5	Yes	5	No	10	No	10	5
39	Thompson Butte Stockwater Well Development (AKA CL Bar Ranch Stockwater Well "B")	No	10	No	10	No	10	No	10	No	10	10
40	McDowell Flats Stockwater Well Development	Yes	5	Yes	5	Yes	5	No	10	No	10	5
41	Strong Ditch POD Rehabilitation	Yes	5	Yes	5	Yes	5	No	10	No	10	5
42	Marshal Bump Stockwater Well Development	Yes	5	Yes	5	Yes	5	No	10	No	10	5

Table M.8. Sensitive species evaluation

PROJECT	NAME	WY TIER 1		BLM SENSITIVE		USFS SENSITIVE		THREATENED		ENDANGERED		WEIGHTED SCORE (MINIMUM)
		STATUS	SCORE	STATUS	SCORE	STATUS	SCORE	STATUS	SCORE	STATUS	SCORE	
43	Well Power Supply Rehabilitation	Yes	5	Yes	5	Yes	5	No	10	No	10	5
44	Brosman No. 2 Stockwater Well Development	Yes	5	Yes	5	Yes	5	No	10	No	10	5
45	Fayette Ranch Pivot Sprinkler (AKA West Field Pivot)	Yes	5	Yes	5	Yes	5	No	10	No	10	5
46	Coleman Pasture Stockwater Tank & Pipeline	Yes	5	Yes	5	Yes	5	No	10	No	10	5
47	No Man's Land Stockwater Tank & Pipeline	Yes	5	Yes	5	Yes	5	No	10	No	10	5
48	Coleman Field Spring Development (Stockwater)	Yes	5	Yes	5	Yes	5	No	10	No	10	5
49	Miller Field Stockwater Tanks & Pipelines	Yes	5	Yes	5	Yes	5	No	10	No	10	5
50	Miller Field Stockwater Well Rehabilitation (Solar Conversion)	Yes	5	Yes	5	Yes	5	No	10	No	10	5
51	Glover Field Headgate 1	Yes	5	Yes	5	Yes	5	No	10	No	10	5
52	Glover Field Headgate 2	Yes	5	Yes	5	Yes	5	No	10	No	10	5
53	Glover Field Headgate 3	Yes	5	Yes	5	Yes	5	No	10	No	10	5
54	Glover Field Headgate 4	Yes	5	Yes	5	Yes	5	No	10	No	10	5
55	Glover Field Headgate 5	Yes	5	Yes	5	Yes	5	No	10	No	10	5
56	Glover Field Headgate 6	Yes	5	Yes	5	Yes	5	No	10	No	10	5
57	Glover Field Headgate 7	Yes	5	Yes	5	Yes	5	No	10	No	10	5
58	Section 7 (34-109) Diversion Control Structure Rehab	Yes	5	Yes	5	Yes	5	No	10	No	10	5
59	Section 12 (34-110) Diversion Control Structure Rehab	Yes	5	Yes	5	Yes	5	No	10	No	10	5
60	Section 18 (34-109) Rock Vein Check Structure Rehab	Yes	5	Yes	5	Yes	5	No	10	No	10	5
61	Section 19 (34-109) Diversion Control Structure Rehab	Yes	5	Yes	5	Yes	5	No	10	No	10	5
62	Bootjack Stockwater Well Development	Yes	5	Yes	5	Yes	5	No	10	No	10	5
63	AA Pasture Reservoir	Yes	5	Yes	5	Yes	5	No	10	No	10	5
64	T Pasture Reservoir	Yes	5	Yes	5	Yes	5	No	10	No	10	5

Table M.8. Sensitive species evaluation

PROJECT	NAME	WY TIER 1		BLM SENSITIVE		USFS SENSITIVE		THREATENED		ENDANGERED		WEIGHTED SCORE (MINIMUM)
		STATUS	SCORE	STATUS	SCORE	STATUS	SCORE	STATUS	SCORE	STATUS	SCORE	
65	Seedings Reservoir	Yes	5	Yes	5	Yes	5	No	10	No	10	5
66	Orcutt Ditch - Change of POD	Yes	5	Yes	5	Yes	5	No	10	No	10	5
67	Burgess Stockwater Well	Yes	5	Yes	5	Yes	5	No	10	No	10	5
68	Dave Noble Stockwater Well	No	10	No	10	No	10	No	10	No	10	10
69	Alexander Ditch POD Check Structure Rehab	Yes	5	Yes	5	Yes	5	No	10	No	10	5
70	New Fork Primary Check Structure Rehab	Yes	5	Yes	5	Yes	5	No	10	No	10	5

Table M.9. Shovel-ready evaluation

PROJECT	NAME	SCORE	WEIGHTED SCORE
1	Bee Line Ditch POD Rehabilitation	10	100
2	Mommy Moose Ditch Diversion Rehabilitation (AKA Marsh Creek Ditch POD Rehab)	1	10
3	Preston Ditch Rehabilitation	1	10
4	Ingle Stockwater Well Development	1	10
5	Hedrick Stockwater Well Development	1	10
6	Anselmi Stockwater Well Development	1	10
7	Steele Pivot Sprinkler (AKA Upper Field Pivot)	1	10
8	Silver Lake Dam Outlet Rehabilitation	1	10
9	Stipa Ditch POD Rehabilitation	1	10
10	Stipa Ditch Overflow Diversion Rehabilitation	1	10
11	Stipa Ditch Seepage Area Mitigation	1	10
12	Stipa Ditch Sluffing Area Mitigation	1	10
13	Duck Creek Bank Stabilization (AKA Flooding Mitigation for Stipa Ditch)	1	10
14	Highland Ditch Seepage Area “A”	1	10
15	Highland Ditch Seepage Area “B”	1	10
16	Highland Ditch Seepage Area “C”	1	10
17	Highland Ditch Seepage Area “D”	1	10
18	Highland Ditch Check Structure Rehabilitation “A”	1	10
19	Highland Ditch Check Structure Rehabilitation “B”	1	10
20	Best Ditch Conveyance Rehabilitation	1	10
21	West Fork New Fork River Bank Stabilization	1	10
22	Shriver #2 Stockwater Well Rehabilitation	1	10
23	Welborn Smith No. 1 Stockwater Well Rehabilitation	1	10
24	Horse Corral #1 Stockwater Well Rehabilitation	1	10
25	Welborn #1 Well Rehabilitation	1	10
26	Dumphy Hollow Spring Development (Stockwater)	1	10
27	Noble Place Spring Development (Stockwater)	1	10
28	Smith Place Spring Development (Stockwater)	1	10
29	E.C. Walker Ditch POD Rehabilitation	1	10
30	“The Seedings Meadow” Irrigation Conveyance Rehabilitation	1	10
31	Converse Ditch Rehabilitation	1	10

Table M.9. Shovel-ready evaluation

PROJECT	NAME	SCORE	WEIGHTED SCORE
32	Martin Reservoir (Irrigation)	10	100
33	Valerie Reservoir (Irrigation)	10	100
34	Susan Reservoir (Irrigation)	10	100
35	Annette Reservoir (Irrigation)	10	100
36	New Fork No. 2 Ditch Piping	1	10
37	Kaylou Stock Reservoir Outlet Works Rehabilitation	1	10
38	Cora Butte Stockwater Well Development (AKA CL Bar Ranch Stockwater Well “A”)	1	10
39	Thompson Butte Stockwater Well Development (AKA CL Bar Ranch Stockwater Well "B")	1	10
40	McDowell Flats Stockwater Well Development	1	10
41	Strong Ditch POD Rehabilitation	1	10
42	Marshal Bump Stockwater Well Development	1	10
43	Well Power Supply Rehabilitation	1	10
44	Brosman No. 2 Stockwater Well Development	1	10
45	Fayette Ranch Pivot Sprinkler (AKA West Field Pivot)	1	10
46	Coleman Pasture Stockwater Tank & Pipeline	1	10
47	No Man’s Land Stockwater Tank & Pipeline	1	10
48	Coleman Field Spring Development (Stockwater)	1	10
49	Miller Field Stockwater Tanks & Pipelines	1	10
50	Miller Field Stockwater Well Rehabilitation (Solar Conversion)	1	10
51	Glover Field Headgate 1	1	10
52	Glover Field Headgate 2	1	10
53	Glover Field Headgate 3	1	10
54	Glover Field Headgate 4	1	10
55	Glover Field Headgate 5	1	10
56	Glover Field Headgate 6	1	10
57	Glover Field Headgate 7	1	10
58	Section 7 (34-109) Diversion Control Structure Rehab	1	10
59	Section 12 (34-110) Diversion Control Structure Rehab	1	10
60	Section 18 (34-109) Rock Vein Check Structure Rehab	1	10
61	Section 19 (34-109) Diversion Control Structure Rehab	1	10
62	Bootjack Stockwater Well Development	1	10

Table M.9. Shovel-ready evaluation

PROJECT	NAME	SCORE	WEIGHTED SCORE
63	AA Pasture Reservoir	1	10
64	T Pasture Reservoir	1	10
65	Seedings Reservoir	1	10
66	Orcutt Ditch - Change of POD	1	10
67	Burgess Stockwater Well	1	10
68	Dave Noble Stockwater Well	1	10
69	Alexander Ditch POD Check Structure Rehab	1	10
70	New Fork Primary Check Structure Rehab	1	10

Table M.10. Special designated areas evaluation results

PROJECT	NAME	MA		SRMA		ACEC		WHMA		WSA		WILDER-NESS		WEIGHTED SCORE (MINIMUM)
		STATUS	SCORE	STATUS	SCORE	STATUS	SCORE	STATUS	SCORE	STATUS	SCORE	STATUS	SCORE	
1	Bee Line Ditch POD Rehabilitation	No	10	No	10	No	10	No	10	No	10	No	10	10
2	Mommy Moose Ditch Diversion Rehabilitation (AKA Marsh Creek Ditch POD Rehab)	No	10	No	10	Yes	5	No	10	No	10	No	10	5
3	Preston Ditch Rehabilitation	No	10	No	10	No	10	No	10	No	10	No	10	10
4	Ingle Stockwater Well Development	No	10	No	10	No	10	No	10	No	10	No	10	10
5	Hedrick Stockwater Well Development	No	10	No	10	No	10	No	10	No	10	No	10	10
6	Anselmi Stockwater Well Development	No	10	No	10	No	10	No	10	No	10	No	10	10
7	Steele Pivot Sprinkler (AKA Upper Field Pivot)	No	10	No	10	No	10	No	10	No	10	No	10	10
8	Silver Lake Dam Outlet Rehabilitation	No	10	No	10	No	10	No	10	No	10	Yes	1	1
9	Stipa Ditch POD Rehabilitation	No	10	No	10	No	10	No	10	No	10	No	10	10
10	Stipa Ditch Overflow Diversion Rehabilitation	No	10	No	10	No	10	No	10	No	10	No	10	10
11	Stipa Ditch Seepage Area Mitigation	No	10	Yes	5	No	10	No	10	No	10	No	10	5
12	Stipa Ditch Sluffing Area Mitigation	No	10	No	10	No	10	No	10	No	10	No	10	10
13	Duck Creek Bank Stabilization (AKA Flooding Mitigation for Stipa Ditch)	No	10	No	10	No	10	No	10	No	10	No	10	10
14	Highland Ditch Seepage Area “A”	No	10	No	10	No	10	No	10	No	10	No	10	10
15	Highland Ditch Seepage Area “B”	Yes	7	Yes	5	No	10	No	10	No	10	No	10	5
16	Highland Ditch Seepage Area “C”	No	10	No	10	No	10	No	10	No	10	No	10	10
17	Highland Ditch Seepage Area “D”	No	10	No	10	No	10	No	10	No	10	No	10	10
18	Highland Ditch Check Structure Rehabilitation “A”	No	10	No	10	No	10	No	10	No	10	No	10	10
19	Highland Ditch Check Structure Rehabilitation “B”	No	10	No	10	No	10	No	10	No	10	No	10	10
20	Best Ditch Conveyance Rehabilitation	No	10	No	10	No	10	No	10	No	10	No	10	10
21	West Fork New Fork River Bank Stabilization	No	10	No	10	No	10	No	10	No	10	No	10	10
22	Shriver #2 Stockwater Well Rehabilitation	No	10	No	10	No	10	No	10	No	10	No	10	10
23	Welborn Smith No. 1 Stockwater Well Rehabilitation	No	10	No	10	No	10	No	10	No	10	No	10	10
24	Horse Corral #1 Stockwater Well Rehabilitation	No	10	No	10	No	10	No	10	No	10	No	10	10
25	Welborn #1 Well Rehabilitation	No	10	No	10	No	10	No	10	No	10	No	10	10

Table M.10. Special designated areas evaluation results

PROJECT	NAME	MA		SRMA		ACEC		WHMA		WSA		WILDER-NESS		WEIGHTED SCORE (MINIMUM)
		STATUS	SCORE	STATUS	SCORE	STATUS	SCORE	STATUS	SCORE	STATUS	SCORE	STATUS	SCORE	
26	Dumphy Hollow Spring Development (Stockwater)	No	10	No	10	No	10	No	10	No	10	No	10	10
27	Noble Place Spring Development (Stockwater)	No	10	No	10	No	10	No	10	No	10	No	10	10
28	Smith Place Spring Development (Stockwater)	No	10	No	10	No	10	No	10	No	10	No	10	10
29	E.C. Walker Ditch POD Rehabilitation	No	10	No	10	No	10	No	10	No	10	No	10	10
30	“The Seedings Meadow” Irrigation Conveyance Rehabilitation	No	10	No	10	No	10	No	10	No	10	No	10	10
31	Converse Ditch Rehabilitation	No	10	No	10	No	10	No	10	No	10	No	10	10
32	Martin Reservoir (Irrigation)	No	10	No	10	No	10	No	10	No	10	No	10	10
33	Valerie Reservoir (Irrigation)	No	10	No	10	No	10	No	10	No	10	No	10	10
34	Susan Reservoir (Irrigation)	No	10	No	10	No	10	No	10	No	10	No	10	10
35	Annette Reservoir (Irrigation)	No	10	No	10	No	10	No	10	No	10	No	10	10
36	New Fork No. 2 Ditch Piping	No	10	No	10	No	10	No	10	No	10	No	10	10
37	Kaylou Stock Reservoir Outlet Works Rehabilitation	No	10	No	10	No	10	No	10	No	10	No	10	10
38	Cora Butte Stockwater Well Development (AKA CL Bar Ranch Stockwater Well “A”)	No	10	No	10	No	10	No	10	No	10	No	10	10
39	Thompson Butte Stockwater Well Development (AKA CL Bar Ranch Stockwater Well "B")	No	10	No	10	No	10	No	10	No	10	No	10	10
40	McDowell Flats Stockwater Well Development	No	10	No	10	No	10	No	10	No	10	No	10	10
41	Strong Ditch POD Rehabilitation	No	10	No	10	No	10	No	10	No	10	No	10	10
42	Marshal Bump Stockwater Well Development	No	10	No	10	No	10	No	10	No	10	No	10	10
43	Well Power Supply Rehabilitation	No	10	No	10	No	10	No	10	No	10	No	10	10
44	Brosman No. 2 Stockwater Well Development	No	10	No	10	No	10	No	10	No	10	No	10	10
45	Fayette Ranch Pivot Sprinkler (AKA West Field Pivot)	No	10	No	10	No	10	No	10	No	10	No	10	10
46	Coleman Pasture Stockwater Tank & Pipeline	No	10	No	10	No	10	No	10	No	10	No	10	10
47	No Man’s Land Stockwater Tank & Pipeline	No	10	No	10	No	10	No	10	No	10	No	10	10
48	Coleman Field Spring Development (Stockwater)	No	10	No	10	No	10	No	10	No	10	No	10	10
49	Miller Field Stockwater Tanks & Pipelines	No	10	No	10	No	10	No	10	No	10	No	10	10

Table M.10. Special designated areas evaluation results

PROJECT	NAME	MA		SRMA		ACEC		WHMA		WSA		WILDER-NESS		WEIGHTED SCORE (MINIMUM)
		STATUS	SCORE	STATUS	SCORE	STATUS	SCORE	STATUS	SCORE	STATUS	SCORE	STATUS	SCORE	
50	Miller Field Stockwater Well Rehabilitation (Solar Conversion)	No	10	No	10	No	10	No	10	No	10	No	10	10
51	Glover Field Headgate 1	No	10	No	10	No	10	No	10	No	10	No	10	10
52	Glover Field Headgate 2	No	10	No	10	No	10	No	10	No	10	No	10	10
53	Glover Field Headgate 3	No	10	No	10	No	10	No	10	No	10	No	10	10
54	Glover Field Headgate 4	No	10	No	10	No	10	No	10	No	10	No	10	10
55	Glover Field Headgate 5	No	10	No	10	No	10	No	10	No	10	No	10	10
56	Glover Field Headgate 6	No	10	No	10	No	10	No	10	No	10	No	10	10
57	Glover Field Headgate 7	No	10	No	10	No	10	No	10	No	10	No	10	10
58	Section 7 (34-109) Diversion Control Structure Rehab	No	10	No	10	No	10	No	10	No	10	No	10	10
59	Section 12 (34-110) Diversion Control Structure Rehab	No	10	No	10	No	10	No	10	No	10	No	10	10
60	Section 18 (34-109) Rock Vein Check Structure Rehab	No	10	No	10	No	10	No	10	No	10	No	10	10
61	Section 19 (34-109) Diversion Control Structure Rehab	No	10	No	10	No	10	No	10	No	10	No	10	10
62	Bootjack Stockwater Well Development	No	10	No	10	No	10	No	10	No	10	No	10	10
63	AA Pasture Reservoir	No	10	No	10	No	10	No	10	No	10	No	10	10
64	T Pasture Reservoir	No	10	No	10	No	10	No	10	No	10	No	10	10
65	Seedings Reservoir	No	10	No	10	No	10	No	10	No	10	No	10	10
66	Orcutt Ditch - Change of POD	No	10	No	10	No	10	No	10	No	10	No	10	10
67	Burgess Stockwater Well	No	10	No	10	No	10	No	10	No	10	No	10	10
68	Dave Noble Stockwater Well	No	10	No	10	No	10	No	10	No	10	No	10	10
69	Alexander Ditch POD Check Structure Rehab	No	10	No	10	No	10	No	10	No	10	No	10	10
70	New Fork Primary Check Structure Rehab	No	10	No	10	No	10	No	10	No	10	No	10	10

Table M.11. Project sustainability evaluation

PROJECT	NAME	SCORE	WEIGHTED SCORE
1	Bee Line Ditch POD Rehabilitation	8	8
2	Mommy Moose Ditch Diversion Rehabilitation (AKA Marsh Creek Ditch POD Rehab)	6	6
3	Preston Ditch Rehabilitation	6	6
4	Ingle Stockwater Well Development	8	8
5	Hedrick Stockwater Well Development	8	8
6	Anselmi Stockwater Well Development	8	8
7	Steele Pivot Sprinkler (AKA Upper Field Pivot)	4	4
8	Silver Lake Dam Outlet Rehabilitation	9	9
9	Stipa Ditch POD Rehabilitation	8	8
10	Stipa Ditch Overflow Diversion Rehabilitation	7	7
11	Stipa Ditch Seepage Area Mitigation	6	6
12	Stipa Ditch Sluffing Area Mitigation	9	9
13	Duck Creek Bank Stabilization (AKA Flooding Mitigation for Stipa Ditch)	7	7
14	Highland Ditch Seepage Area “A”	8	8
15	Highland Ditch Seepage Area “B”	8	8
16	Highland Ditch Seepage Area “C”	8	8
17	Highland Ditch Seepage Area “D”	8	8
18	Highland Ditch Check Structure Rehabilitation “A”	7	7
19	Highland Ditch Check Structure Rehabilitation “B”	7	7
20	Best Ditch Conveyance Rehabilitation	5	5
21	West Fork New Fork River Bank Stabilization	6	6
22	Shriver #2 Stockwater Well Rehabilitation	8	8
23	Welborn Smith No. 1 Stockwater Well Rehabilitation	8	8
24	Horse Corral #1 Stockwater Well Rehabilitation	8	8
25	Welborn #1 Well Rehabilitation	8	8
26	Dumphy Hollow Spring Development (Stockwater)	7	7
27	Noble Place Spring Development (Stockwater)	7	7
28	Smith Place Spring Development (Stockwater)	7	7
29	E.C. Walker Ditch POD Rehabilitation	8	8
30	“The Seedings Meadow” Irrigation Conveyance Rehabilitation	7	7
31	Converse Ditch Rehabilitation	8	8

Table M.11. Project sustainability evaluation

PROJECT	NAME	SCORE	WEIGHTED SCORE
32	Martin Reservoir (Irrigation)	9	9
33	Valerie Reservoir (Irrigation)	9	9
34	Susan Reservoir (Irrigation)	9	9
35	Annette Reservoir (Irrigation)	9	9
36	New Fork No. 2 Ditch Piping	5	5
37	Kaylou Stock Reservoir Outlet Works Rehabilitation	9	9
38	Cora Butte Stockwater Well Development (AKA CL Bar Ranch Stockwater Well “A”)	8	8
39	Thompson Butte Stockwater Well Development (AKA CL Bar Ranch Stockwater Well "B")	8	8
40	McDowell Flats Stockwater Well Development	8	8
41	Strong Ditch POD Rehabilitation	8	8
42	Marshal Bump Stockwater Well Development	8	8
43	Well Power Supply Rehabilitation	5	5
44	Brosman No. 2 Stockwater Well Development	8	8
45	Fayette Ranch Pivot Sprinkler (AKA West Field Pivot)	4	4
46	Coleman Pasture Stockwater Tank & Pipeline	7	7
47	No Man’s Land Stockwater Tank & Pipeline	7	7
48	Coleman Field Spring Development (Stockwater)	7	7
49	Miller Field Stockwater Tanks & Pipelines	7	7
50	Miller Field Stockwater Well Rehabilitation (Solar Conversion)	6	6
51	Glover Field Headgate 1	8	8
52	Glover Field Headgate 2	8	8
53	Glover Field Headgate 3	8	8
54	Glover Field Headgate 4	8	8
55	Glover Field Headgate 5	8	8
56	Glover Field Headgate 6	8	8
57	Glover Field Headgate 7	8	8
58	Section 7 (34-109) Diversion Control Structure Rehab	8	8
59	Section 12 (34-110) Diversion Control Structure Rehab	8	8
60	Section 18 (34-109) Rock Vein Check Structure Rehab	8	8
61	Section 19 (34-109) Diversion Control Structure Rehab	8	8
62	Bootjack Stockwater Well Development	7	7

Table M.11. Project sustainability evaluation

PROJECT	NAME	SCORE	WEIGHTED SCORE
63	AA Pasture Reservoir	8	8
64	T Pasture Reservoir	8	8
65	Seedings Reservoir	8	8
66	Orcutt Ditch - Change of POD	8	8
67	Burgess Stockwater Well	3	3
68	Dave Noble Stockwater Well	5	5
69	Alexander Ditch POD Check Structure Rehab	8	8
70	New Fork Primary Check Structure Rehab	8	8

Table M.12. Small water project program priorities evaluation

PROJECT	NAME	RESULT	SCORE	WEIGHTED SCORE
1	Bee Line Ditch POD Rehabilitation	Irrigation	2	20
2	Mommy Moose Ditch Diversion Rehabilitation (AKA Marsh Creek Ditch POD Rehab)	Irrigation	2	20
3	Preston Ditch Rehabilitation	Pipeline	3	30
4	Ingle Stockwater Well Development	Source Water	5	50
5	Hedrick Stockwater Well Development	Source Water	5	50
6	Anselmi Stockwater Well Development	Source Water	5	50
7	Steele Pivot Sprinkler (AKA Upper Field Pivot)	Irrigation	2	20
8	Silver Lake Dam Outlet Rehabilitation	Storage	4	40
9	Stipa Ditch POD Rehabilitation	Irrigation	2	20
10	Stipa Ditch Overflow Diversion Rehabilitation	Irrigation	2	20
11	Stipa Ditch Seepage Area Mitigation	Pipeline	3	30
12	Stipa Ditch Sluffing Area Mitigation	Pipeline	3	30
13	Duck Creek Bank Stabilization (AKA Flooding Mitigation for Stipa Ditch)	Environmental	1	10
14	Highland Ditch Seepage Area “A”	Pipeline	3	30
15	Highland Ditch Seepage Area “B”	Pipeline	3	30
16	Highland Ditch Seepage Area “C”	Pipeline	3	30
17	Highland Ditch Seepage Area “D”	Pipeline	3	30
18	Highland Ditch Check Structure Rehabilitation “A”	Irrigation	2	20
19	Highland Ditch Check Structure Rehabilitation “B”	Irrigation	2	20
20	Best Ditch Conveyance Rehabilitation	Irrigation	2	20
21	West Fork New Fork River Bank Stabilization	Environmental	1	10
22	Shriver #2 Stockwater Well Rehabilitation	Source Water	5	50
23	Welborn Smith No. 1 Stockwater Well Rehabilitation	Source Water	5	50
24	Horse Corral #1 Stockwater Well Rehabilitation	Source Water	5	50
25	Welborn #1 Well Rehabilitation	Source Water	5	50
26	Dumphy Hollow Spring Development (Stockwater)	Source Water	5	50
27	Noble Place Spring Development (Stockwater)	Source Water	5	50
28	Smith Place Spring Development (Stockwater)	Source Water	5	50
29	E.C. Walker Ditch POD Rehabilitation	Irrigation	2	20
30	“The Seedings Meadow” Irrigation Conveyance Rehabilitation	Irrigation	2	20

Table M.12. Small water project program priorities evaluation

PROJECT	NAME	RESULT	SCORE	WEIGHTED SCORE
31	Converse Ditch Rehabilitation	Irrigation	2	20
32	Martin Reservoir (Irrigation)	Storage	4	40
33	Valerie Reservoir (Irrigation)	Storage	4	40
34	Susan Reservoir (Irrigation)	Storage	4	40
35	Annette Reservoir (Irrigation)	Storage	4	40
36	New Fork No. 2 Ditch Piping	Pipeline	3	30
37	Kaylou Stock Reservoir Outlet Works Rehabilitation	Storage	4	40
38	Cora Butte Stockwater Well Development (AKA CL Bar Ranch Stockwater Well “A”)	Source Water	5	50
39	Thompson Butte Stockwater Well Development (AKA CL Bar Ranch Stockwater Well "B")	Source Water	5	50
40	McDowell Flats Stockwater Well Development	Source Water	5	50
41	Strong Ditch POD Rehabilitation	Irrigation	2	20
42	Marshal Bump Stockwater Well Development	Source Water	5	50
43	Well Power Supply Rehabilitation	Pipeline	3	30
44	Brosman No. 2 Stockwater Well Development	Source Water	5	50
45	Fayette Ranch Pivot Sprinkler (AKA West Field Pivot)	Irrigation	2	20
46	Coleman Pasture Stockwater Tank & Pipeline	Source Water	5	50
47	No Man’s Land Stockwater Tank & Pipeline	Source Water	5	50
48	Coleman Field Spring Development (Stockwater)	Source Water	5	50
49	Miller Field Stockwater Tanks & Pipelines	Source Water	5	50
50	Miller Field Stockwater Well Rehabilitation (Solar Conversion)	Pipeline	3	30
51	Glover Field Headgate 1	Irrigation	2	20
52	Glover Field Headgate 2	Irrigation	2	20
53	Glover Field Headgate 3	Irrigation	2	20
54	Glover Field Headgate 4	Irrigation	2	20
55	Glover Field Headgate 5	Irrigation	2	20
56	Glover Field Headgate 6	Irrigation	2	20
57	Glover Field Headgate 7	Irrigation	2	20
58	Section 7 (34-109) Diversion Control Structure Rehab	Irrigation	2	20
59	Section 12 (34-110) Diversion Control Structure Rehab	Irrigation	2	20
60	Section 18 (34-109) Rock Vein Check Structure Rehab	Irrigation	2	20

Table M.12. Small water project program priorities evaluation

PROJECT	NAME	RESULT	SCORE	WEIGHTED SCORE
61	Section 19 (34-109) Diversion Control Structure Rehab	Irrigation	2	20
62	Bootjack Stockwater Well Development	Source Water	5	50
63	AA Pasture Reservoir	Storage	4	40
64	T Pasture Reservoir	Storage	4	40
65	Seedings Reservoir	Storage	4	40
66	Orcutt Ditch - Change of POD	Irrigation	2	20
67	Burgess Stockwater Well	Source Water	5	50
68	Dave Noble Stockwater Well	Source Water	5	50
69	Alexander Ditch POD Check Structure Rehab	Irrigation	2	20
70	New Fork Primary Check Structure Rehab	Irrigation	2	20

Table M.13. Wetland encroachment evaluation results

PROJECT	NAME	RESULT	SCORE	WEIGHTED SCORE
1	Bee Line Ditch POD Rehabilitation	Within	1	1
2	Mommy Moose Ditch Diversion Rehabilitation (AKA Marsh Creek Ditch POD Rehab)	Within	1	1
3	Preston Ditch Rehabilitation	Within	1	1
4	Ingle Stockwater Well Development	Within	1	1
5	Hedrick Stockwater Well Development	Within	1	1
6	Anselmi Stockwater Well Development	Within	1	1
7	Steele Pivot Sprinkler (AKA Upper Field Pivot)	Outside	10	10
8	Silver Lake Dam Outlet Rehabilitation	Within	1	1
9	Stipa Ditch POD Rehabilitation	Within	1	1
10	Stipa Ditch Overflow Diversion Rehabilitation	Within	1	1
11	Stipa Ditch Seepage Area Mitigation	Within	1	1
12	Stipa Ditch Sluffing Area Mitigation	Within	1	1
13	Duck Creek Bank Stabilization (AKA Flooding Mitigation for Stipa Ditch)	Within	1	1
14	Highland Ditch Seepage Area “A”	Outside	10	10
15	Highland Ditch Seepage Area “B”	Outside	10	10
16	Highland Ditch Seepage Area “C”	Outside	10	10
17	Highland Ditch Seepage Area “D”	Outside	10	10
18	Highland Ditch Check Structure Rehabilitation “A”	Outside	10	10
19	Highland Ditch Check Structure Rehabilitation “B”	Outside	10	10
20	Best Ditch Conveyance Rehabilitation	Outside	10	10
21	West Fork New Fork River Bank Stabilization	Outside	10	10
22	Shriver #2 Stockwater Well Rehabilitation	Within	1	1
23	Welborn Smith No. 1 Stockwater Well Rehabilitation	Outside	10	10
24	Horse Corral #1 Stockwater Well Rehabilitation	Within	1	1
25	Welborn #1 Well Rehabilitation	Within	1	1
26	Dumphy Hollow Spring Development (Stockwater)	Outside	10	10
27	Noble Place Spring Development (Stockwater)	Outside	10	10
28	Smith Place Spring Development (Stockwater)	Within	1	1
29	E.C. Walker Ditch POD Rehabilitation	Within	1	1
30	“The Seedings Meadow” Irrigation Conveyance Rehabilitation	Within	1	1

Table M.13. Wetland encroachment evaluation results

PROJECT	NAME	RESULT	SCORE	WEIGHTED SCORE
31	Converse Ditch Rehabilitation	Outside	10	10
32	Martin Reservoir (Irrigation)	Outside	10	10
33	Valerie Reservoir (Irrigation)	Outside	10	10
34	Susan Reservoir (Irrigation)	Outside	10	10
35	Annette Reservoir (Irrigation)	Outside	10	10
36	New Fork No. 2 Ditch Piping	Outside	10	10
37	Kaylou Stock Reservoir Outlet Works Rehabilitation	Within	1	1
38	Cora Butte Stockwater Well Development (AKA CL Bar Ranch Stockwater Well “A”)	Outside	10	10
39	Thompson Butte Stockwater Well Development (AKA CL Bar Ranch Stockwater Well "B")	Outside	10	10
40	McDowell Flats Stockwater Well Development	Within	1	1
41	Strong Ditch POD Rehabilitation	Within	1	1
42	Marshal Bump Stockwater Well Development	Outside	10	10
43	Well Power Supply Rehabilitation	Within	1	1
44	Brosman No. 2 Stockwater Well Development	Outside	10	10
45	Fayette Ranch Pivot Sprinkler (AKA West Field Pivot)	Within	1	1
46	Coleman Pasture Stockwater Tank & Pipeline	Outside	10	10
47	No Man’s Land Stockwater Tank & Pipeline	Outside	10	10
48	Coleman Field Spring Development (Stockwater)	Within	1	1
49	Miller Field Stockwater Tanks & Pipelines	Within	1	1
50	Miller Field Stockwater Well Rehabilitation (Solar Conversion)	Within	1	1
51	Glover Field Headgate 1	Within	1	1
52	Glover Field Headgate 2	Within	1	1
53	Glover Field Headgate 3	Within	1	1
54	Glover Field Headgate 4	Within	1	1
55	Glover Field Headgate 5	Within	1	1
56	Glover Field Headgate 6	Within	1	1
57	Glover Field Headgate 7	Within	1	1
58	Section 7 (34-109) Diversion Control Structure Rehab	Within	1	1
59	Section 12 (34-110) Diversion Control Structure Rehab	Within	1	1
60	Section 18 (34-109) Rock Vein Check Structure Rehab	Within	1	1

Table M.13. Wetland encroachment evaluation results

PROJECT	NAME	RESULT	SCORE	WEIGHTED SCORE
61	Section 19 (34-109) Diversion Control Structure Rehab	Within	1	1
62	Bootjack Stockwater Well Development	Outside	10	10
63	AA Pasture Reservoir	Within	1	1
64	T Pasture Reservoir	Outside	10	10
65	Seedings Reservoir	Outside	10	10
66	Orcutt Ditch - Change of POD	Within	1	1
67	Burgess Stockwater Well	Within	1	1
68	Dave Noble Stockwater Well	Outside	10	10
69	Alexander Ditch POD Check Structure Rehab	Within	1	1
70	New Fork Primary Check Structure Rehab	Within	1	1

Table M.14. Wetland hydrology evaluation results

PROJECT	NAME	SCORE	WEIGHTED SCORE
1	Bee Line Ditch POD Rehabilitation	10	10
2	Mommy Moose Ditch Diversion Rehabilitation (AKA Marsh Creek Ditch POD Rehab)	10	10
3	Preston Ditch Rehabilitation	10	10
4	Ingle Stockwater Well Development	10	10
5	Hedrick Stockwater Well Development	10	10
6	Anselmi Stockwater Well Development	10	10
7	Steele Pivot Sprinkler (AKA Upper Field Pivot)	5	5
8	Silver Lake Dam Outlet Rehabilitation	10	10
9	Stipa Ditch POD Rehabilitation	10	10
10	Stipa Ditch Overflow Diversion Rehabilitation	10	10
11	Stipa Ditch Seepage Area Mitigation	8	8
12	Stipa Ditch Sluffing Area Mitigation	10	10
13	Duck Creek Bank Stabilization (AKA Flooding Mitigation for Stipa Ditch)	10	10
14	Highland Ditch Seepage Area “A”	8	8
15	Highland Ditch Seepage Area “B”	8	8
16	Highland Ditch Seepage Area “C”	8	8
17	Highland Ditch Seepage Area “D”	8	8
18	Highland Ditch Check Structure Rehabilitation “A”	10	10
19	Highland Ditch Check Structure Rehabilitation “B”	10	10
20	Best Ditch Conveyance Rehabilitation	10	10
21	West Fork New Fork River Bank Stabilization	10	10
22	Shriver #2 Stockwater Well Rehabilitation	10	10
23	Welborn Smith No. 1 Stockwater Well Rehabilitation	10	10
24	Horse Corral #1 Stockwater Well Rehabilitation	10	10
25	Welborn #1 Well Rehabilitation	10	10
26	Dumphy Hollow Spring Development (Stockwater)	10	10
27	Noble Place Spring Development (Stockwater)	10	10
28	Smith Place Spring Development (Stockwater)	10	10
29	E.C. Walker Ditch POD Rehabilitation	10	10
30	“The Seedings Meadow” Irrigation Conveyance Rehabilitation	10	10
31	Converse Ditch Rehabilitation	10	10

Table M.14. Wetland hydrology evaluation results

PROJECT	NAME	SCORE	WEIGHTED SCORE
32	Martin Reservoir (Irrigation)	10	10
33	Valerie Reservoir (Irrigation)	10	10
34	Susan Reservoir (Irrigation)	10	10
35	Annette Reservoir (Irrigation)	10	10
36	New Fork No. 2 Ditch Piping	3	3
37	Kaylou Stock Reservoir Outlet Works Rehabilitation	10	10
38	Cora Butte Stockwater Well Development (AKA CL Bar Ranch Stockwater Well “A”)	10	10
39	Thompson Butte Stockwater Well Development (AKA CL Bar Ranch Stockwater Well "B")	10	10
40	McDowell Flats Stockwater Well Development	10	10
41	Strong Ditch POD Rehabilitation	10	10
42	Marshal Bump Stockwater Well Development	10	10
43	Well Power Supply Rehabilitation	10	10
44	Brosman No. 2 Stockwater Well Development	10	10
45	Fayette Ranch Pivot Sprinkler (AKA West Field Pivot)	5	5
46	Coleman Pasture Stockwater Tank & Pipeline	10	10
47	No Man’s Land Stockwater Tank & Pipeline	10	10
48	Coleman Field Spring Development (Stockwater)	10	10
49	Miller Field Stockwater Tanks & Pipelines	10	10
50	Miller Field Stockwater Well Rehabilitation (Solar Conversion)	10	10
51	Glover Field Headgate 1	10	10
52	Glover Field Headgate 2	10	10
53	Glover Field Headgate 3	10	10
54	Glover Field Headgate 4	10	10
55	Glover Field Headgate 5	10	10
56	Glover Field Headgate 6	10	10
57	Glover Field Headgate 7	10	10
58	Section 7 (34-109) Diversion Control Structure Rehab	10	10
59	Section 12 (34-110) Diversion Control Structure Rehab	10	10
60	Section 18 (34-109) Rock Vein Check Structure Rehab	10	10
61	Section 19 (34-109) Diversion Control Structure Rehab	10	10
62	Bootjack Stockwater Well Development	10	10

Table M.14. Wetland hydrology evaluation results

PROJECT	NAME	SCORE	WEIGHTED SCORE
63	AA Pasture Reservoir	10	10
64	T Pasture Reservoir	10	10
65	Seedings Reservoir	10	10
66	Orcutt Ditch - Change of POD	10	10
67	Burgess Stockwater Well	10	10
68	Dave Noble Stockwater Well	10	10
69	Alexander Ditch POD Check Structure Rehab	10	10
70	New Fork Primary Check Structure Rehab	10	10

Appendix N.
Conceptual Designs and Cost Estimates - Small Water Projects

This page is left intentionally blank.

N.1 Introduction

This appendix provides conceptual designs and cost estimates for the 56 small water projects identified in Section 4.1 of the main body of this document. After scheduled on-site field investigations were performed, several of the projects were renamed after more information regarding the specific project was gathered. However, the unique project numbers referenced in Table 29 in the main body of this document has been retained herein. For ease of use by the sponsor and individual stake holders, the individual project information is listed in this appendix in order of ownership (alphabetically) and not by evaluation matrix ranking results. Conceptual designs and cost estimates are provided herein in the order listed in **Table N.1** below.

Table N.1. Presented order of conceptual designs and cost estimates

Landowner Name	Unique Project Number	Project Name
Anselmi, Mark	2	Mommy Moose Supply Rehabilitation Project
Anselmi, Regina	6	Anselmi Stock Water Development Project
Briggs Ranch	31	Converse Ditch Headgate Rehabilitation Project
Burgess, Rita	66	Burgess Stock Water Supply Project
CL Bar Ranch	38	Thompson Butte Stock Water Well Development
CL Bar Ranch	39	Cora Butte Stock Water Well Development
Cora Valley Angus	68	Alexander Ditch Check Structure Rehabilitation Project
Cora Valley Angus	69	New Fork Primary Check Structure Rehabilitation Project
Fayette Ranch	44	Brosman No. 2 Stock Water Well Development
Hedrick, Kirby	5	Hedrick Stock Water Development Project
Highland Irrigation District	16	Highland Ditch Seepage Area C
Highland Irrigation District	17	Highland Ditch Seepage Area D
Highland Irrigation District	18	Highland Ditch Diversion Structure A
Highland Irrigation District	19	Highland Ditch Diversion Structure B
Ingle, Nic	4	Ingle Stock Water Development Project
McGuire, Ryan	37	Kaylou Stock Reservoir Rehabilitation Project
Murdock Ranch	46a	Coleman Field Stock Water Development Project
Murdock Ranch	46b	Coleman Field Stock Water Development Project
Murdock Ranch	48	Coleman Field Spring Development Project
Murdock Ranch	49	Miller Field Stock Water Development Projects
Murdock Ranch	50	Miller Field Well Power Conversion Project
Murdock Ranch	51	Glover Field Diversion Structures
Murdock Ranch	58	Coleman Field Diversion Structures
Murdock Ranch	59	Island Ditch Waste Way Structure
Murdock Ranch	60	Willow Creek Rock Check
Murdock Ranch	61	2-Way Check Strucure
Noble Family Close, LLC	32 33 34 35	Martin, Valerie, Susan, & Annette Reservoirs
Noble Family Close, LLC	36	New Fork Ditch No. 2 Piping Project (Phase I)
Noble Family Close, LLC	36	New Fork Ditch No. 2 Piping Project (Phase II)
Noble Family Close, LLC	40	McDowell Flats Stock Water Development Project
Noble Family Close, LLC	41	Strong Ditch Diversion Rehabilitation Project
Noble Family Close, LLC	42	Marshal Bump Stock Water Development Project
Shelter Park HOA	65	Orcutt Ditch Rehabilitation Project

Table N.1. Presented order of conceptual designs and cost estimates

Landowner Name	Unique Project Number	Project Name
Steege, Rich	9	Stipa Ditch Diversion Rehabilitation Project
Steege, Rich	10	Stipa Ditch Overflow Diversion Rehabilitation Project
Steege, Rich	12	Stipa Ditch Sluffing Mitigation Project
Willow Creek Ranch	22	Shriver # 2 Well Rehabilitation Project
Willow Creek Ranch	23	Welborn Smith No. 1 Well Rehabilitation Project
Willow Creek Ranch	24	Horse Corral #1 Well Rehabilitation Project
Willow Creek Ranch	25	Welborn #1 Well Rehabilitation Project
Willow Creek Ranch	26	Dumphy Hollow Spring Stock Water Development Project
Willow Creek Ranch	27	Noble Place Spring Stock Water Development Project
Willow Creek Ranch	28	Southeast Smith Place Spring Stock Water Development Project
Willow Creek Ranch	29	EC Walker Ditch Diversion Rehabilitation Project
Willow Creek Ranch	30	Seedings Meadow Rehabilitation Project
Willow Creek Ranch	62-1	Lower State Reservoir - 1
Willow Creek Ranch	62-2	Lower State Reservoir - 2
Willow Creek Ranch	62-3	Lower State Reservoir Project - 3
Willow Creek Ranch	63-1	Dumpy Creek Reservoir - 1
Willow Creek Ranch	63-2	Dumpy Creek Reservoir - 2
Willow Creek Ranch	63-3	Dumpy Creek Reservoir - 3
Willow Creek Ranch	63-4	Dumpy Creek Reservoir - 4
Willow Creek Ranch	63-5	Dumpy Creek Reservoir - 5

PROJECT STAKEHOLDER

ANSELMI, MARK

NEW FORK RIVER WATERSHED STUDY LEVEL I

Owner/Operator: Anselmi, Mark
Project Type: Irrigation
Project ID: 2
Project Name: Mommy Moose Supply Rehabilitation Project
Location (PLSS): Sec. 5, T.36N., R.110W.
Location (Lat/Long): 43.12142°, 110.00356°

PROJECT COMPONENTS - ITEMIZED COSTS

ITEM No.	DESCRIPTION	QUANTITY	UNIT	UNIT COST	TOTAL COST
1	Mobilization	1	LS	$ 600.00	$ 600.00
2	Bonds	1	LS	$ 300.00	$ 300.00
3	Misc. Excavation & Haul Off	25	CY	$ 22.00	$ 550.00
4	2'-3' Rock Rip-Rap & Check	30	CY	$ 45.00	$ 1,350.00
5	Screened Cobble Stone	20	CY	$ 18.00	$ 360.00
				TOTAL COMPONENT COST (SUBTOTAL #2):	$ 3,160.00

PREPARATION OF FINAL DESIGNS & SPECIFICATIONS:	$ 800.00
PERMITTING AND MITIGATION:	$ 1,600.00
LEGAL FEES:	$ -
ACQUISTION OF ACCESS AND RIGHTS-OF-WAY:	$ 750.00
PRE-CONSTRUCTION COSTS (**SUBTOTAL #1**):	$ 3,150.00
TOTAL COMPONENT COST **(SUBTOTAL #2**):	$ 3,160.00
CONSTRUCTION ENGINEERING COST (SUBTOTAL #2 x 10%):	$ 316.00
COMPONENTS AND ENGINEERING COSTS (**SUBTOTAL #3**):	$ 3,476.00
CONTINGENCY (SUBTOTAL #3 X 15%):	$ 521.40
TOTAL CONSTRUCTION COST (**SUBTOTAL #4**):	$ 3,997.40
TOTAL PROJECT COST (**SUBTOTAL #1 + SUBTOTAL #4**):	**$ 7,147.40**

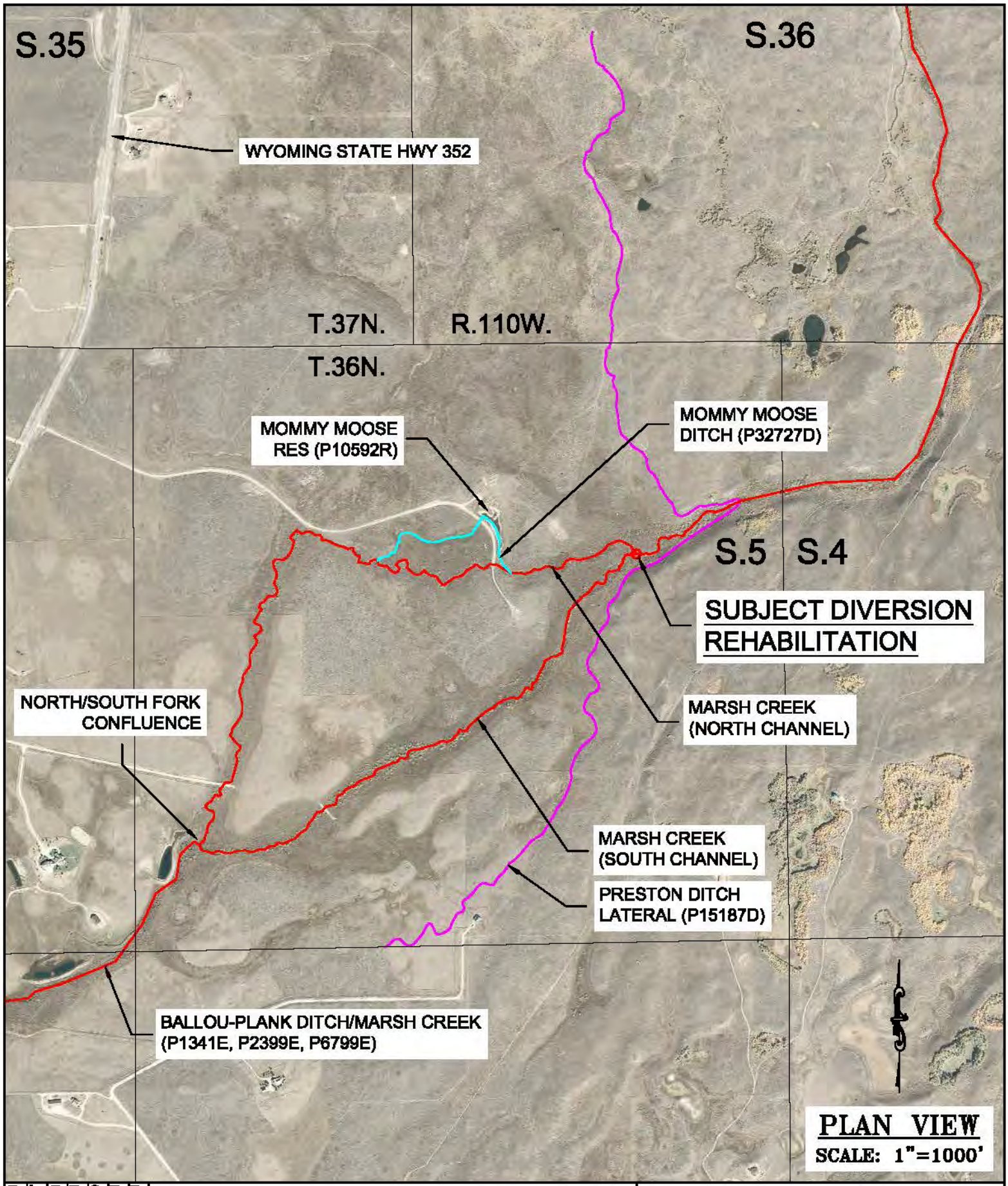

DESIGNED BY: MTJ
DRAWN BY: MTJ
CHECKED BY: MCE
DATE: 7/05/17
REV:
JOB NO: 4183
PAGE: 1 OF 3

WWDC–NEW FORK RIVER WATERSHED
MASTER PLAN–LEVEL I STUDY
MARK ANSELMI (MOMMY MOOSE SUPPLY REHAB)
LOCATED IN SECTION 5, T.36N., R.110W.,
SUBLETTE COUNTY, WY

RIO VERDE ENGINEERING
(307) 367-2828
FAX# (307)-367-2546
PINEDALE, WYOMING

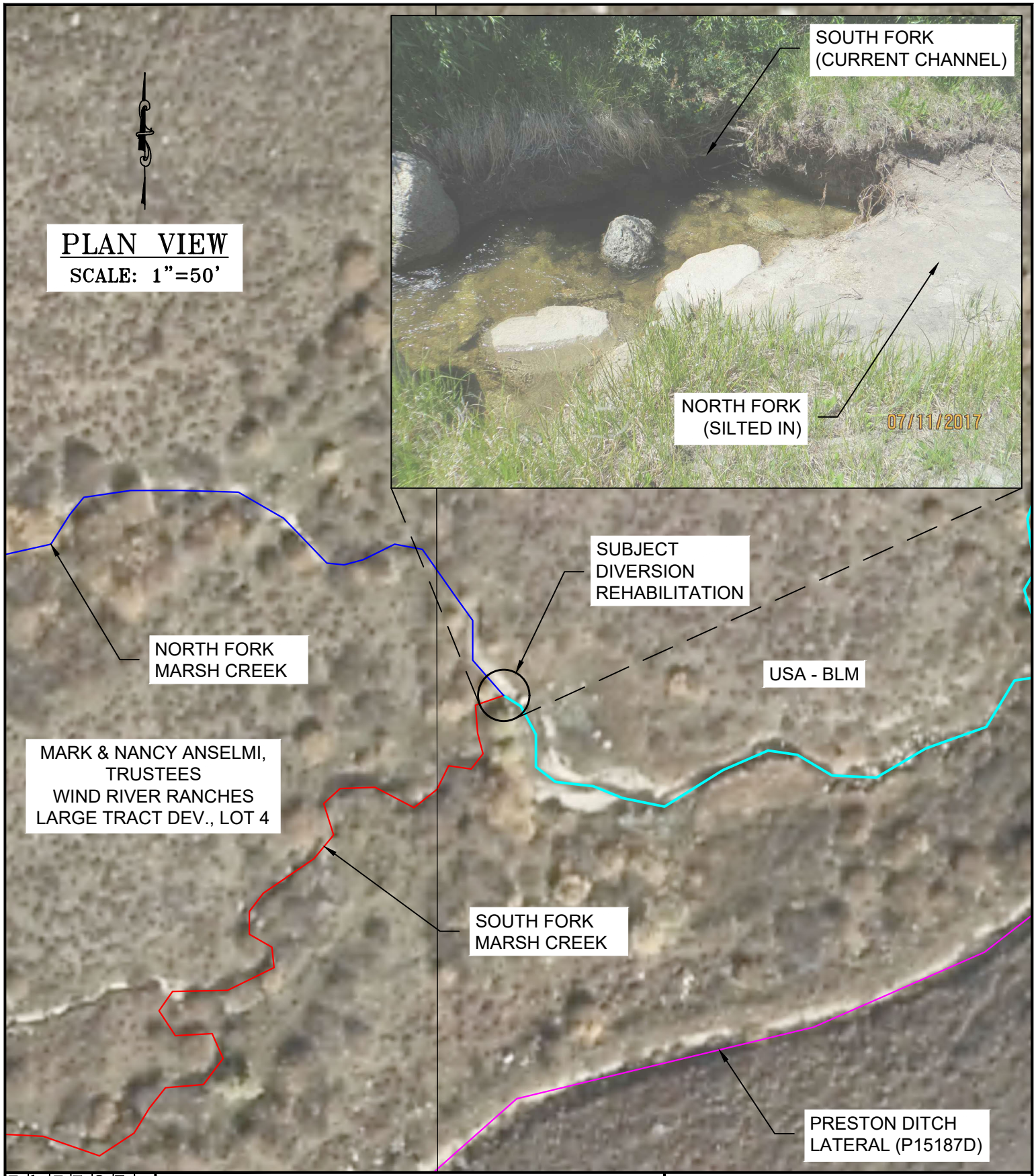

DESIGNED BY: MTJ	
DRAWN BY: MTJ	
CHECKED BY: MCE	
DATE: 7/11/17	
REV:	
JOB NO: 4183	
PAGE: 2 OF 3	

WWDC–NEW FORK RIVER WATERSHED MASTER PLAN–LEVEL I STUDY

MARK ANSELMI (MOMMY MOOSE SUPPLY REHAB)
LOCATED IN SECTION 5, T.36N., R.110W.,
SUBLETTE COUNTY, WY

RIO VERDE ENGINEERING
PINEDALE, WYOMING
(307) 367-2826
FAX# (307)-367-2546

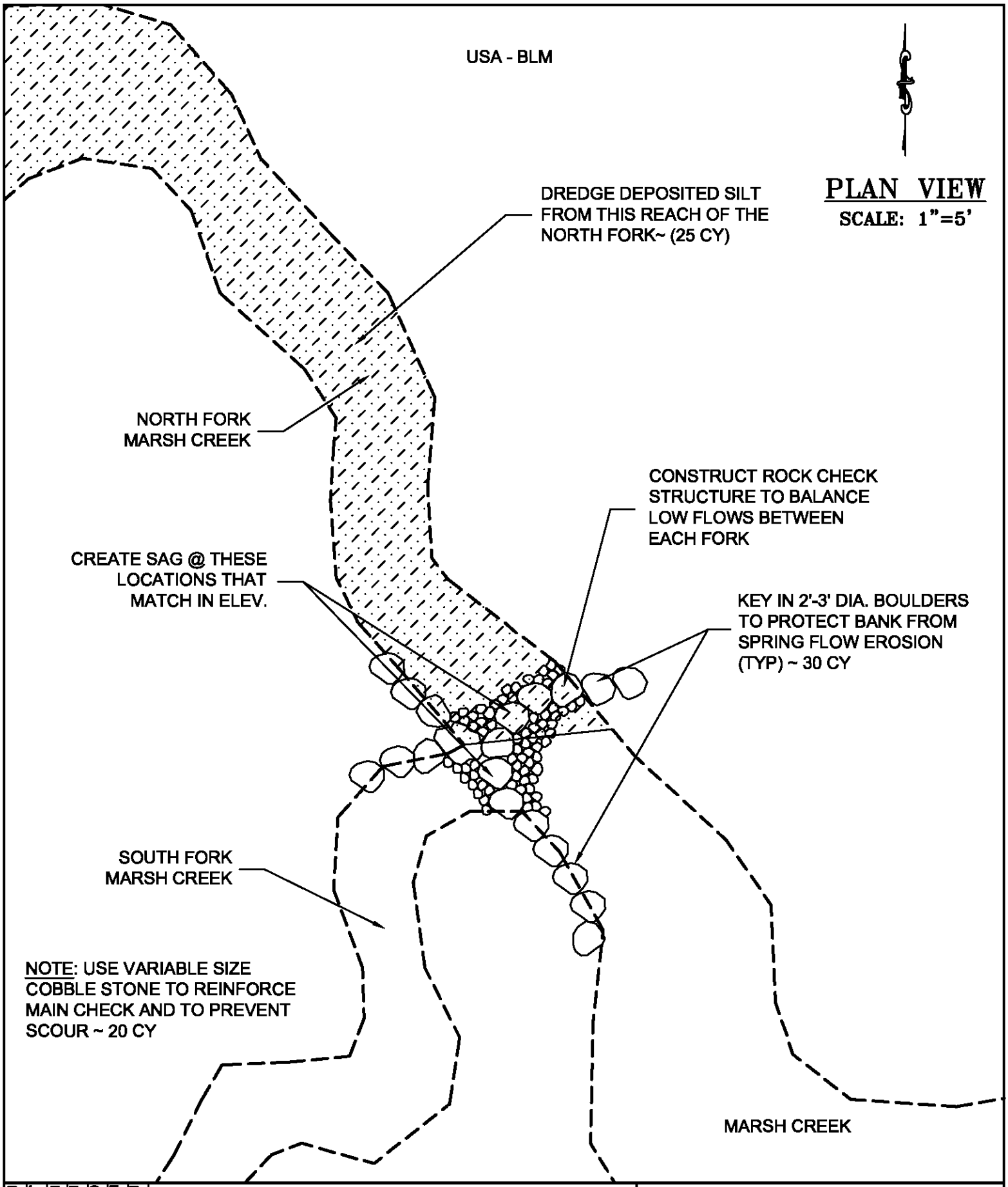

PAGE: 3 OF 3
JOB NO: 4183
REV:
DATE: 7/11/17
CHECKED BY: MCE
DRAWN BY: MTJ
DESIGNED BY: MTJ

WWDC–NEW FORK RIVER WATERSHED
MASTER PLAN–LEVEL I STUDY
MARK ANSELMI (MOMMY MOOSE SUPPLY REHAB)
LOCATED IN SECTION 5, T.36N., R.110W.,
SUBLETTE COUNTY, WY

RIO VERDE ENGINEERING
(307) 367-2828
FAX# (307)-367-2546
PINEDALE, WYOMING

PROJECT STAKEHOLDER

ANSELMI, REGINA

NEW FORK RIVER WATERSHED STUDY LEVEL I

Owner/Operator: Anselmi, Regina
Project Type: Source Water Development
Project ID: 6
Project Name: Anselmi Stock Water Development Project
Location (PLSS): Sec. 35, T.37N., R.110W.
Location (Lat/Long): 43.12759°, 110.01244°

PROJECT COMPONENTS - ITEMIZED COSTS

ITEM No.	DESCRIPTION	QUANTITY	UNIT	UNIT COST	TOTAL COST
1	Mobilization	1	LS	$ 900.00	$ 900.00
2	Bonds	1	LS	$ 300.00	$ 300.00
3	Shallow Well Excavation	35	CY	$ 11.00	$ 385.00
4	Solar Array (Complete)	1	LS	$ 2,400.00	$ 2,400.00
5	Submersible Pump & Equipment	1	LS	$ 1,300.00	$ 1,300.00
6	Pump Test	1	LS	$ 1,500.00	$ 1,500.00
7	36" Dia. ADS Perf. Pipe w/ Cap	20	LF	$ 68.00	$ 1,360.00
8	2" Dia. Clean Rock	18	CY	$ 15.00	$ 270.00
9	750 Gal. Trough (Complete)	1	LS	$ 2,200.00	$ 2,200.00
10	1-1/4" SDR 11 Pipe	115	LF	$ 3.05	$ 350.75
11	4" SDR 11 Pipe	150	LF	$ 6.95	$ 1,042.50
12	4-Rail Pole Fence	100	LF	$ 8.50	$ 850.00
				TOTAL COMPONENT COST (SUBTOTAL #2):	$ 12,858.25

PREPARATION OF FINAL DESIGNS & SPECIFICATIONS:	$ 1,100.00
PERMITTING AND MITIGATION:	$ 1,000.00
LEGAL FEES:	$ -
ACQUISTION OF ACCESS AND RIGHTS-OF-WAY:	$ 300.00
PRE-CONSTRUCTION COSTS (**SUBTOTAL #1**):	$ 2,400.00
TOTAL COMPONENT COST (**SUBTOTAL #2**):	$ 12,858.25
CONSTRUCTION ENGINEERING COST (SUBTOTAL #2 x 10%):	$ 1,285.83
COMPONENTS AND ENGINEERING COSTS (**SUBTOTAL #3**):	$ 14,144.08
CONTINGENCY (SUBTOTAL #3 X 15%):	$ 2,121.61
TOTAL CONSTRUCTION COST (**SUBTOTAL #4**):	$ 16,265.69
TOTAL PROJECT COST (**SUBTOTAL #1 + SUBTOTAL #4**):	**$ 18,665.69**

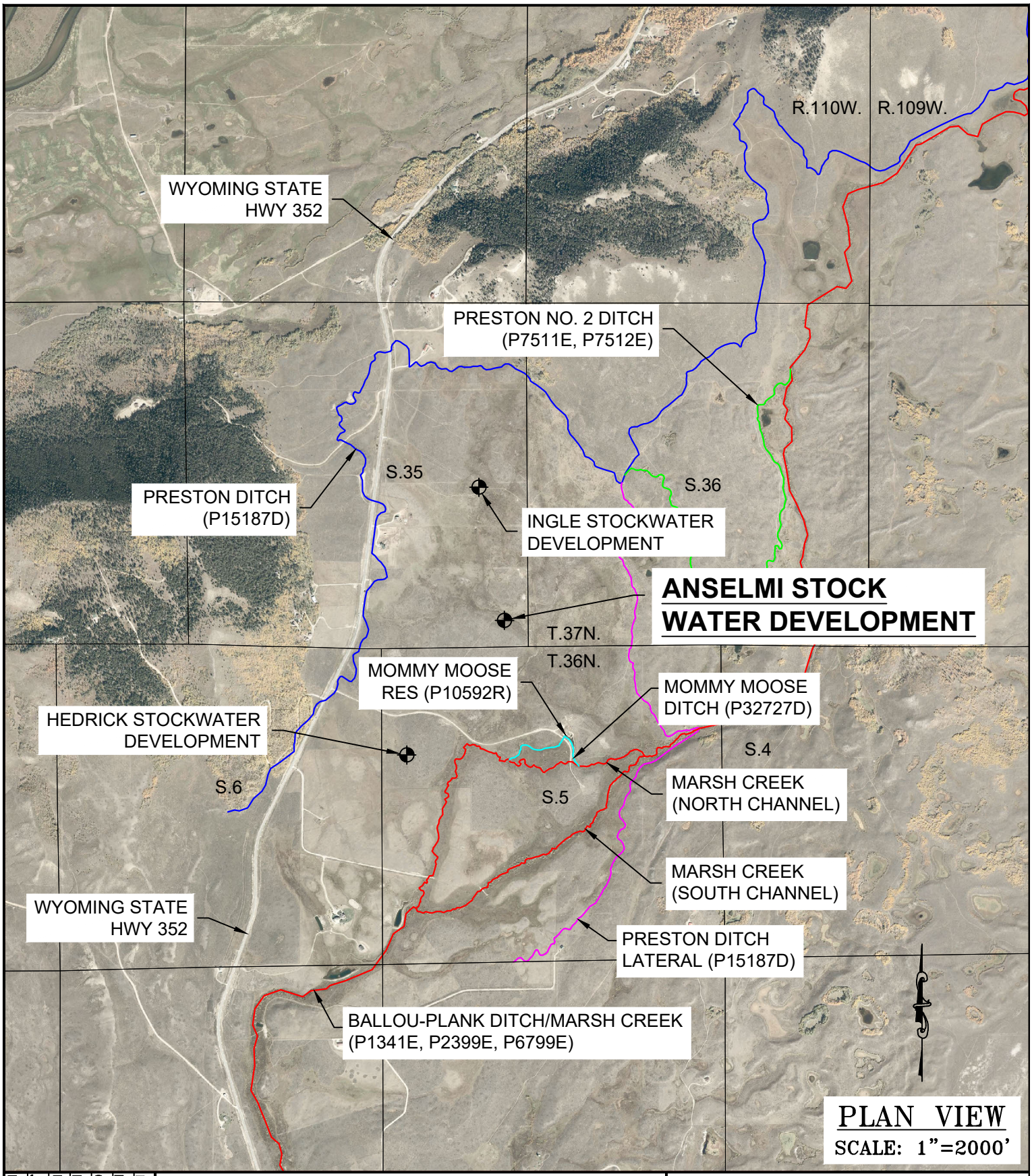

DESIGNED BY: MTJ
DRAWN BY: MTJ
CHECKED BY: MCE
DATE: 7/10/17
REV:
JOB NO: 4183
PAGE: 1 OF 2

WWDC–NEW FORK RIVER WATERSHED MASTER PLAN–LEVEL I STUDY

REGINA ANSELMI (STOCK WATER DEVELOPMENT)
LOCATED IN SECTION 35, T.37N., R.110W.,
SUBLETTE COUNTY, WY

RIO VERDE ENGINEERING
(307) 367-2826
FAX# (307)-367-2546
PINEDALE, WYOMING

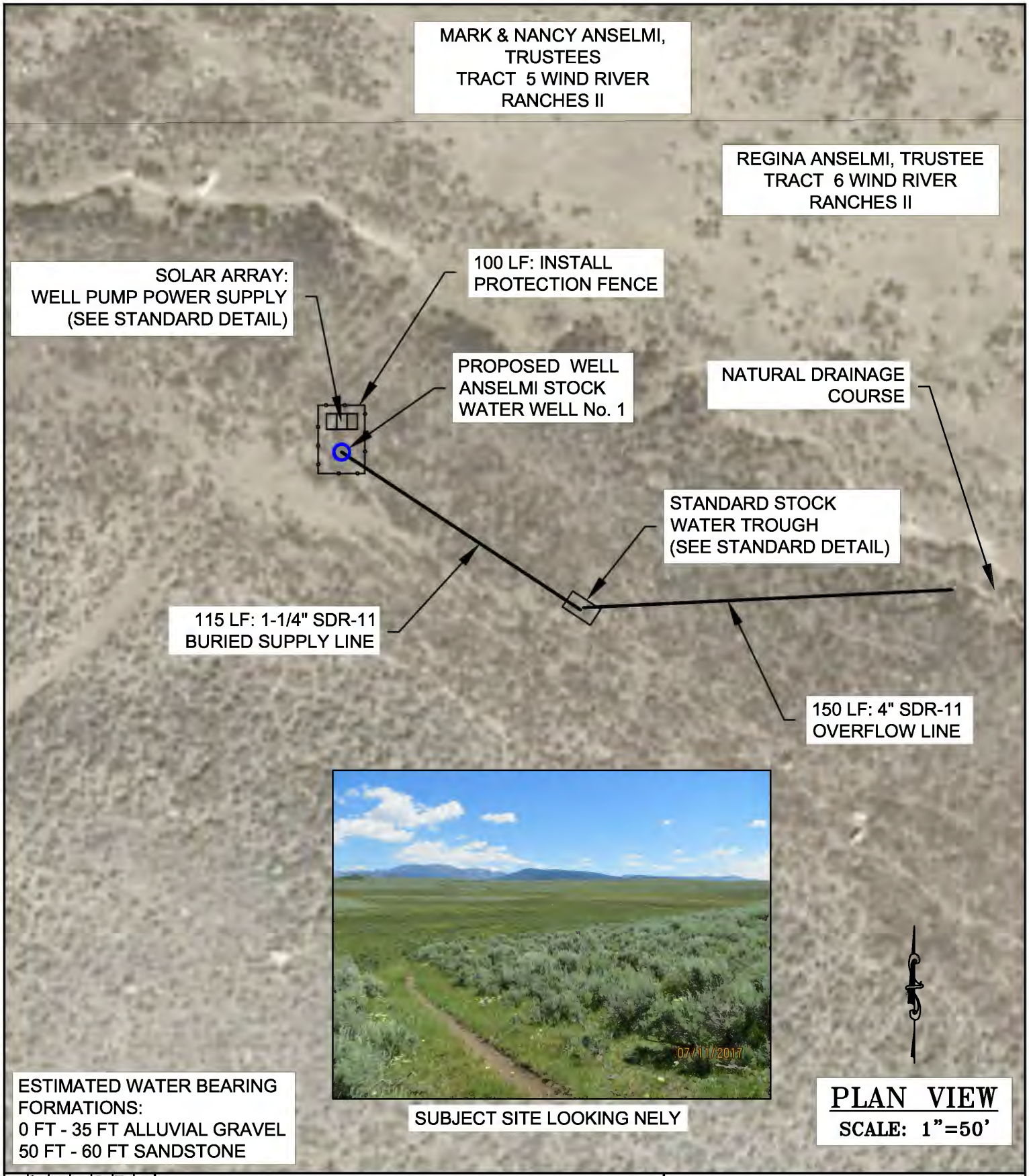

SUBJECT SITE LOOKING NELY

PLAN VIEW
SCALE: 1"=50'

PAGE: 2 OF 2	JOB NO: 4183	REV:	DATE: 7/10/17	CHECKED BY: MCE	DRAWN BY: MTJ	DESIGNED BY: MTJ

WWDC–NEW FORK RIVER WATERSHED MASTER PLAN–LEVEL I STUDY

REGINA ANSELMI (STOCK WATER DEVELOPMENT)
LOCATED IN SECTION 35, T.37N., R.110W.,
SUBLETTE COUNTY, WY

RIO VERDE ENGINEERING
(307) 367-2826
FAX# (307)-367-2546
PINEDALE, WYOMING

DISCLAIMER:

FIELD VERIFICATION IS NEEDED REGARDING WATER ZONES, STATIC WATER LEVEL, WATER YIELD, & DRAW DOWN. ACTUAL WELL DEPTHS AND POWER REQUIREMENTS WILL VARY.

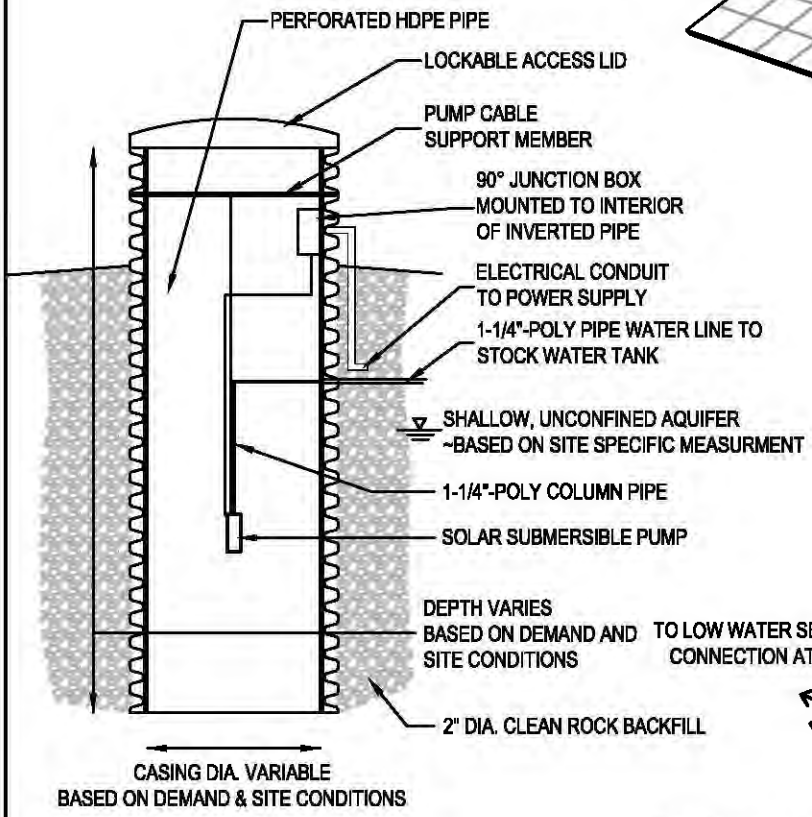

TYPICAL SHALLOW WELL

NOT TO SCALE

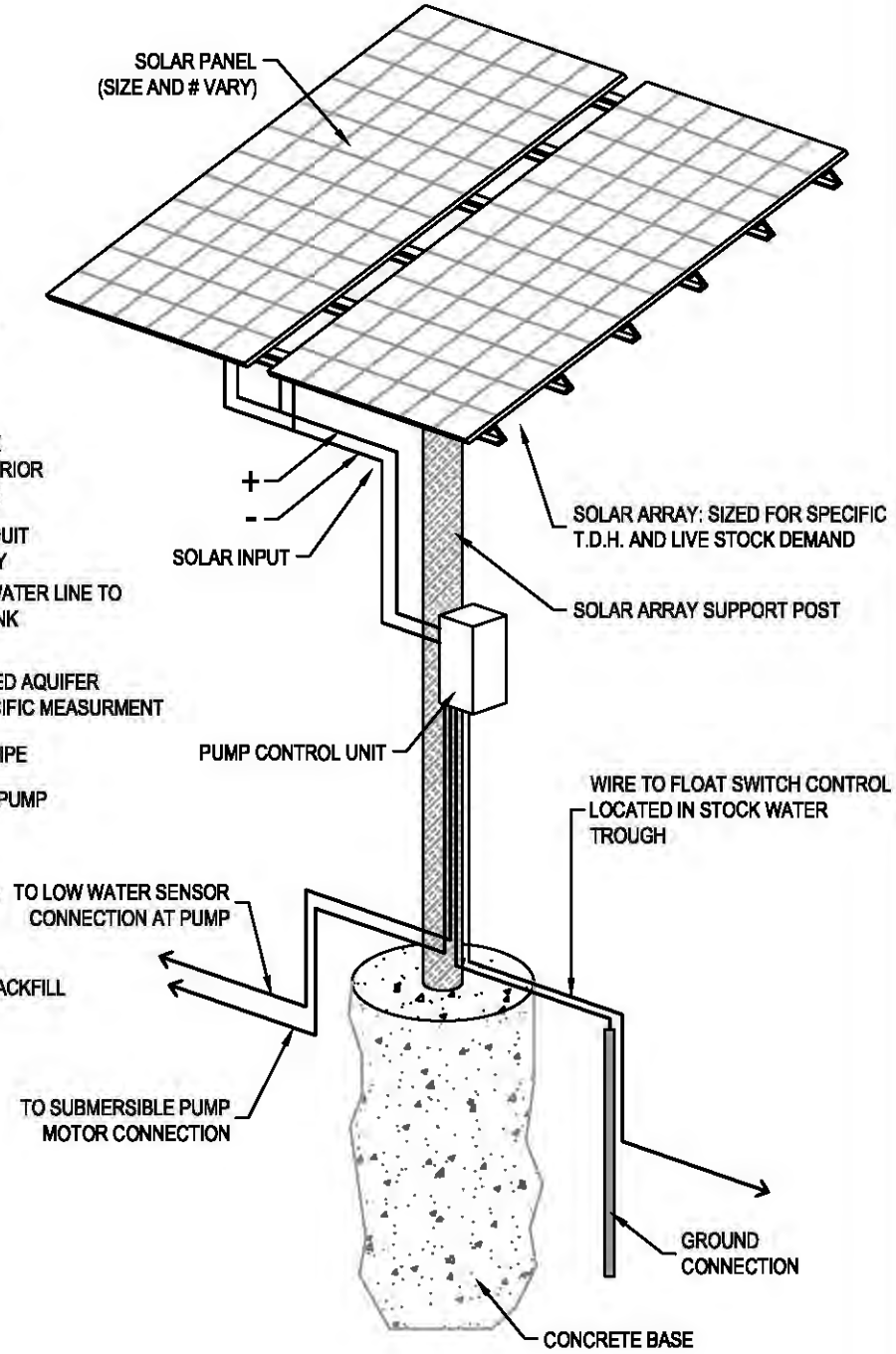

TYPICAL SOLAR ARRAY

NOT TO SCALE

DESIGNED BY:	STANDARD DETAIL	RIO VERDE ENGINEERING
DRAWN BY: MTJ	SHALLOW WELL – SOLAR POWERED STOCK WATERING SYSTEM	(307) 367-2828 FAX# (307)-367-2546 PINEDALE, WYOMING
CHECKED BY: MCE		
DATE: 6/05/17		
REV:		
JOB NO: 4183		
PAGE: 1 OF 1		

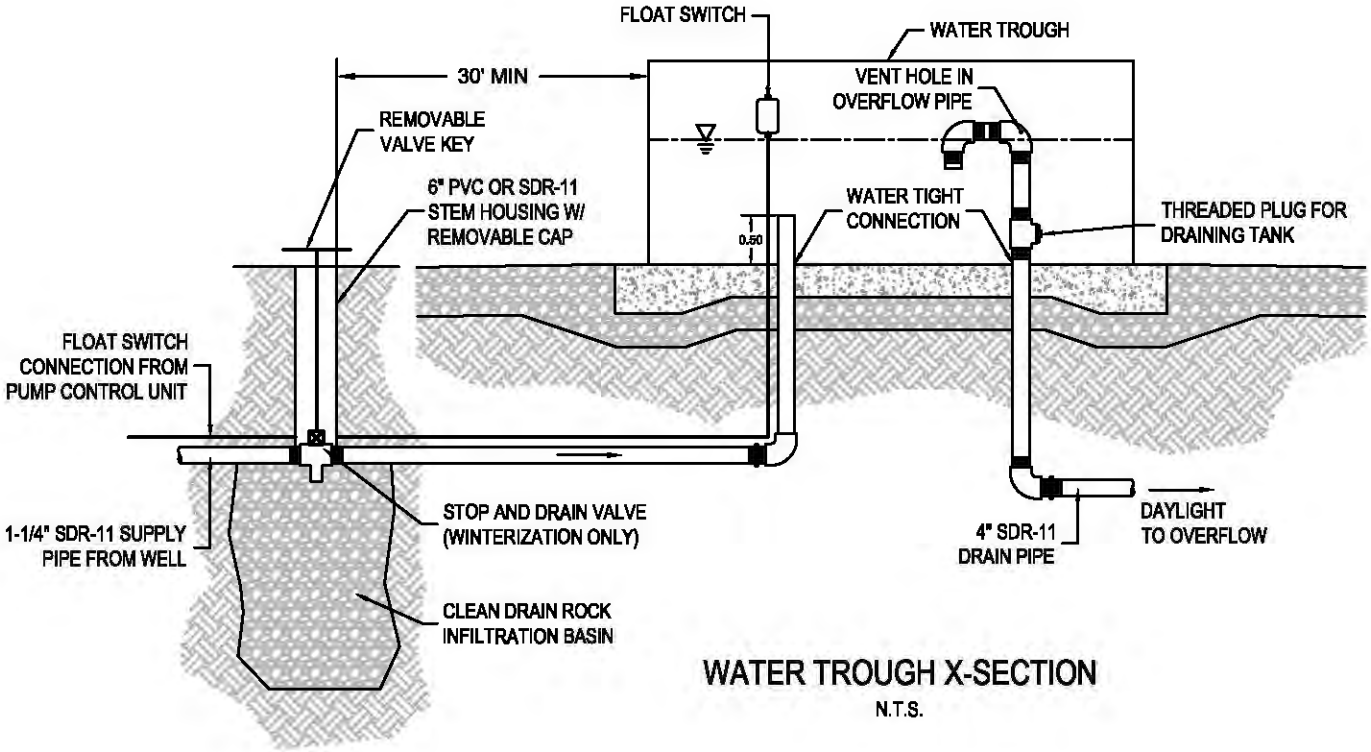

WATER TROUGH X-SECTION

N.T.S.

STANDARD DETAIL
STOCK WATER TROUGH
(RECTANGULAR)

RIO VERDE ENGINEERING
(307) 367-2826
FAX# (307)-367-2346
PINEDALE, WYOMING

DESIGNED BY:
DRAWN BY: MTJ
CHECKED BY: MCE
DATE: 4/21/17
REV:
JOB NO: 4183
PAGE: 1 OF 1

PROJECT STAKEHOLDER

BRIGGS RANCH

NEW FORK RIVER WATERSHED STUDY LEVEL I

Owner/Operator: Briggs Ranch
Project Type: Irrigation
Project ID: 31
Project Name: Converse Ditch Headgate Rehabilitation Project
Location (PLSS): Sec. 3, T.34N., R.110W.
Location (Lat/Long): 42.941783°, 109.958724°

PROJECT COMPONENTS - ITEMIZED COSTS

ITEM No.	DESCRIPTION	QUANTITY	UNIT	UNIT COST	TOTAL COST
1	Mobilization	1	LS	$ 1,900.00	$ 1,900.00
2	Bonds	1	LS	$ 300.00	$ 300.00
3	Excavation & Embankment	10	CY	$ 22.00	$ 220.00
4	Rip-Rap	10	CY	$ 42.00	$ 420.00
5	72"x36" Steel Screw Gate	2	EA	$ 5,300.00	$ 10,600.00
6	Headgate (Concrete)	1	LS	$ 7,200.00	$ 7,200.00
7	Steel Grate Walk Way (3'x15')	1	EA	$ 600.00	$ 600.00
				TOTAL COMPONENT COST (SUBTOTAL #2):	$ 21,240.00

PREPARATION OF FINAL DESIGNS & SPECIFICATIONS:	$ 1,800.00
PERMITTING AND MITIGATION:	$ 300.00
LEGAL FEES:	$ -
ACQUISTION OF ACCESS AND RIGHTS-OF-WAY:	$ -
PRE-CONSTRUCTION COSTS (**SUBTOTAL #1**):	$ 2,100.00
TOTAL COMPONENT COST **(SUBTOTAL #2**):	$ 21,240.00
CONSTRUCTION ENGINEERING COST (SUBTOTAL #2 x 10%):	$ 2,124.00
COMPONENTS AND ENGINEERING COSTS (**SUBTOTAL #3**):	$ 23,364.00
CONTINGENCY (SUBTOTAL #3 X 15%):	$ 3,504.60
TOTAL CONSTRUCTION COST (**SUBTOTAL #4**):	$ 26,868.60
TOTAL PROJECT COST (**SUBTOTAL #1 + SUBTOTAL #4**):	**$ 28,968.60**

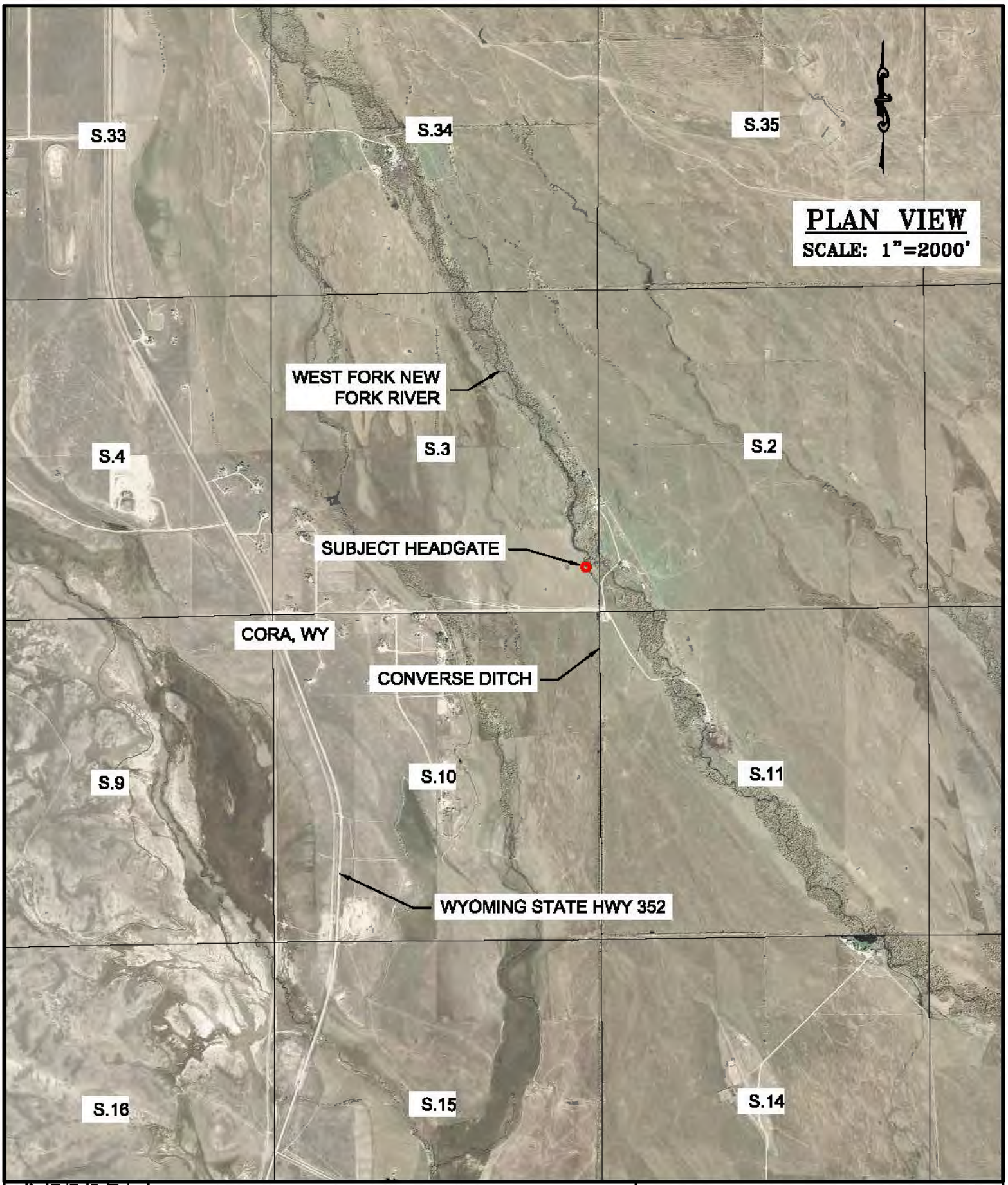

DESIGNED BY: MTJ
DRAWN BY: MTJ
CHECKED BY: MCE
DATE: 7/07/17
REV:
JOB NO: 4183
PAGE: 1 OF 3

WWDC–NEW FORK RIVER WATERSHED
MASTER PLAN–LEVEL I STUDY
BRIGGS RANCH (CONVERSE DITCH HEADGATE REHAB)
LOCATED IN SECTION 3, T.34N., R.110W.,
SUBLETTE COUNTY, WY

RIO VERDE ENGINEERING
(307) 367-2826
FAX# (307)-367-2546
PINEDALE, WYOMING

EXISTING STATE OF HEADGATE

DESIGNED BY: MTJ	WWDC–NEW FORK RIVER WATERSHED
DRAWN BY: MTJ	MASTER PLAN–LEVEL I STUDY
CHECKED BY: MCE	BRIGGS RANCH (CONVERSE DITCH HEADGATE REHAB)
DATE: 7/07/17	LOCATED IN SECTION 3, T.34N., R.110W.,
REV:	SUBLETTE COUNTY, WY
JOB NO: 4183	
PAGE: 2 OF 3	

RIO VERDE ENGINEERING
(307) 367-2826
FAX# (307)-367-2546
PINEDALE, WYOMING

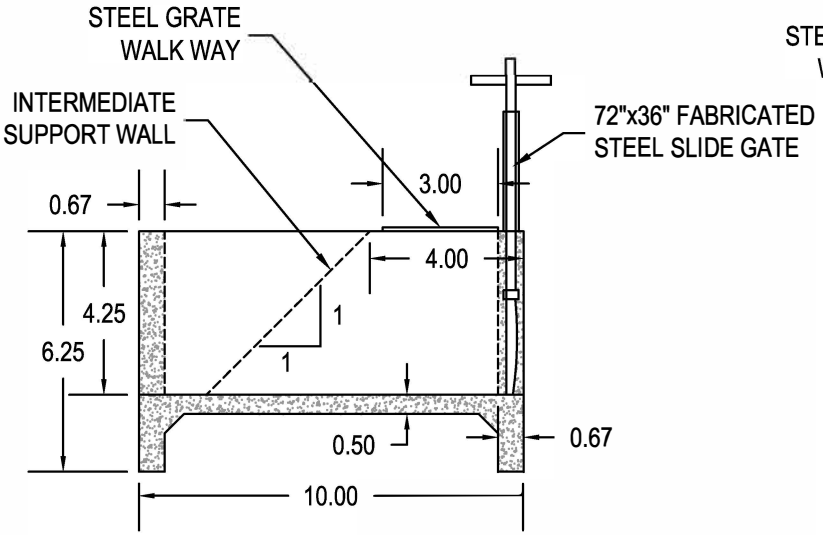

PROFILE VIEW A-A'

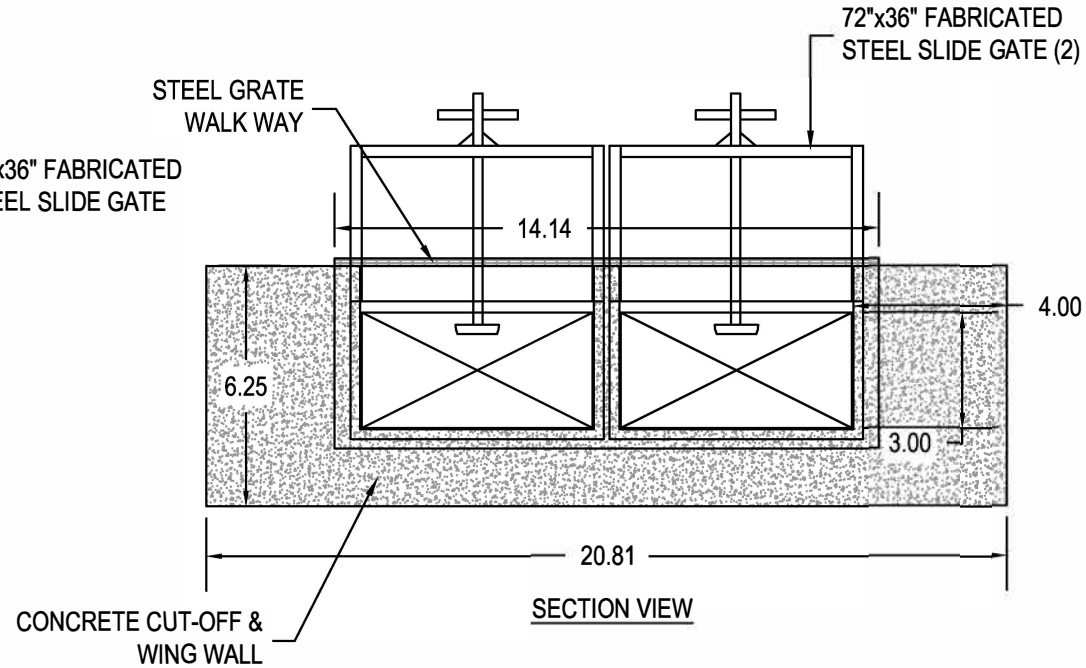

SECTION VIEW

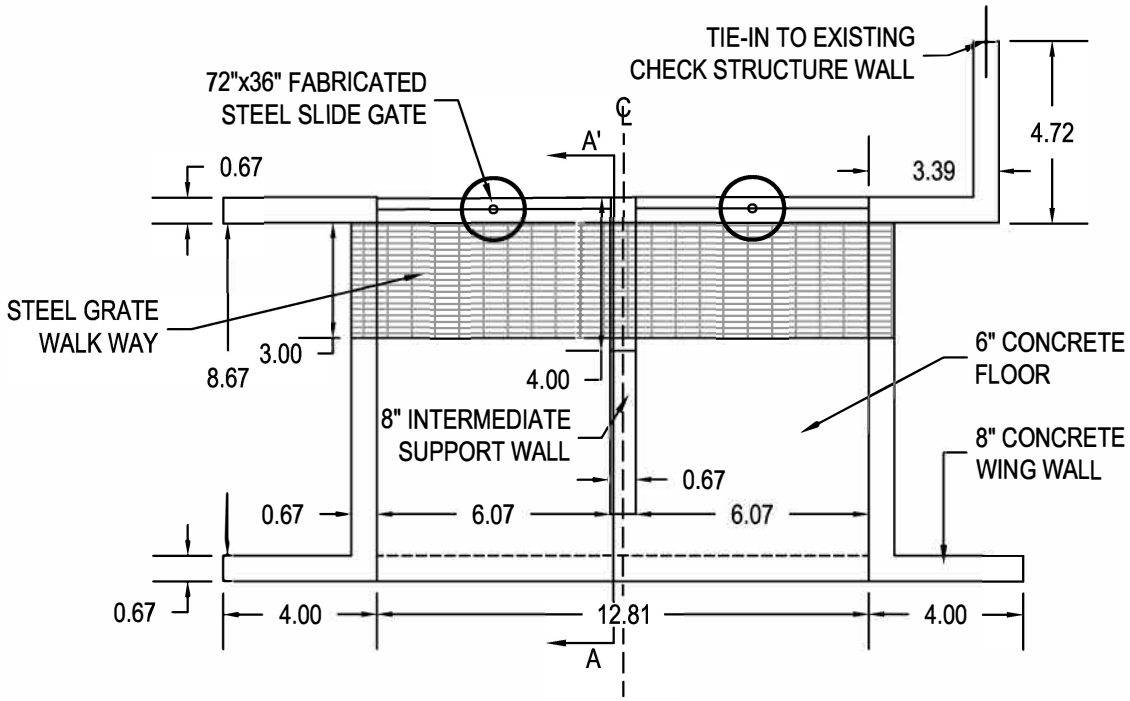

PLAN VIEW

TOTAL CONCRETE
VOLUME: 7.2 CY

SCALE: 1"=5'

WWDC–NEW FORK RIVER WATERSHED
MASTER PLAN–LEVEL I STUDY
BRIGGS RANCH (CONVERSE DITCH HEADGATE REHAB)
LOCATED IN SECTION 3, T.34N., R.110W.,
SUBLETTE COUNTY, WY

DESIGNED BY: MTJ
DRAWN BY: MTJ
CHECKED BY: MCE
DATE: 7/07/17
REV:
JOB NO: 4183
PAGE: 3 OF 3

RIO VERDE
ENGINEERING
(307) 367-2826
FAX# (307)-367-2546
PINEDALE, WYOMING

PROJECT STAKEHOLDER

BURGESS, RITA

NEW FORK RIVER WATERSHED STUDY LEVEL I

Owner/Operator: Burgess, Rita
Project Type: Source Water Supply
Project ID: 66
Project Name: Burgess Stock Water Supply Project
Location (PLSS): Sec. 9, T.36N., R.110W.
Location (Lat/Long): 43.10135°, 109.99015°

PROJECT COMPONENTS - ITEMIZED COSTS

ITEM No.	DESCRIPTION	QUANTITY	UNIT	UNIT COST	TOTAL COST
1	Mobilization	1	LS	$ 3,100.00	$ 3,100.00
2	Bonds	1	LS	$ 800.00	$ 800.00
2	Well Drilling	330	LF	$ 65.00	$ 21,450.00
3	Pump Test	1	LS	$ 3,500.00	$ 3,500.00
4	Submersible Pump & Equipment	1	LS	$ 3,100.00	$ 3,100.00
5	Solar Array (Add-on to Existing)	1	LS	$ 4,700.00	$ 4,700.00
6	Power Line Trench & Conduit	220	LF	$ 4.00	$ 880.00
7	4-Rail Pole Fence	100	LF	$ 8.50	$ 850.00
8	1-1/4" SDR 11 Pipe	55	LF	$ 3.05	$ 167.75
				TOTAL COMPONENT COST (SUBTOTAL #2):	$ 38,547.75

PREPARATION OF FINAL DESIGNS & SPECIFICATIONS:	$ 1,200.00
PERMITTING AND MITIGATION:	$ 800.00
LEGAL FEES:	$ -
ACQUISTION OF ACCESS AND RIGHTS-OF-WAY:	$ -
PRE-CONSTRUCTION COSTS (**SUBTOTAL #1**):	$ 2,000.00
TOTAL COMPONENT COST (**SUBTOTAL #2**):	$ 38,547.75
CONSTRUCTION ENGINEERING COST (SUBTOTAL #2 x 10%):	$ 3,854.78
COMPONENTS AND ENGINEERING COSTS (**SUBTOTAL #3**):	$ 42,402.53
CONTINGENCY (SUBTOTAL #3 X 15%):	$ 6,360.38
TOTAL CONSTRUCTION COST (**SUBTOTAL #4**):	$ 48,762.90
TOTAL PROJECT COST (**SUBTOTAL #1 + SUBTOTAL #4**):	**$ 50,762.90**

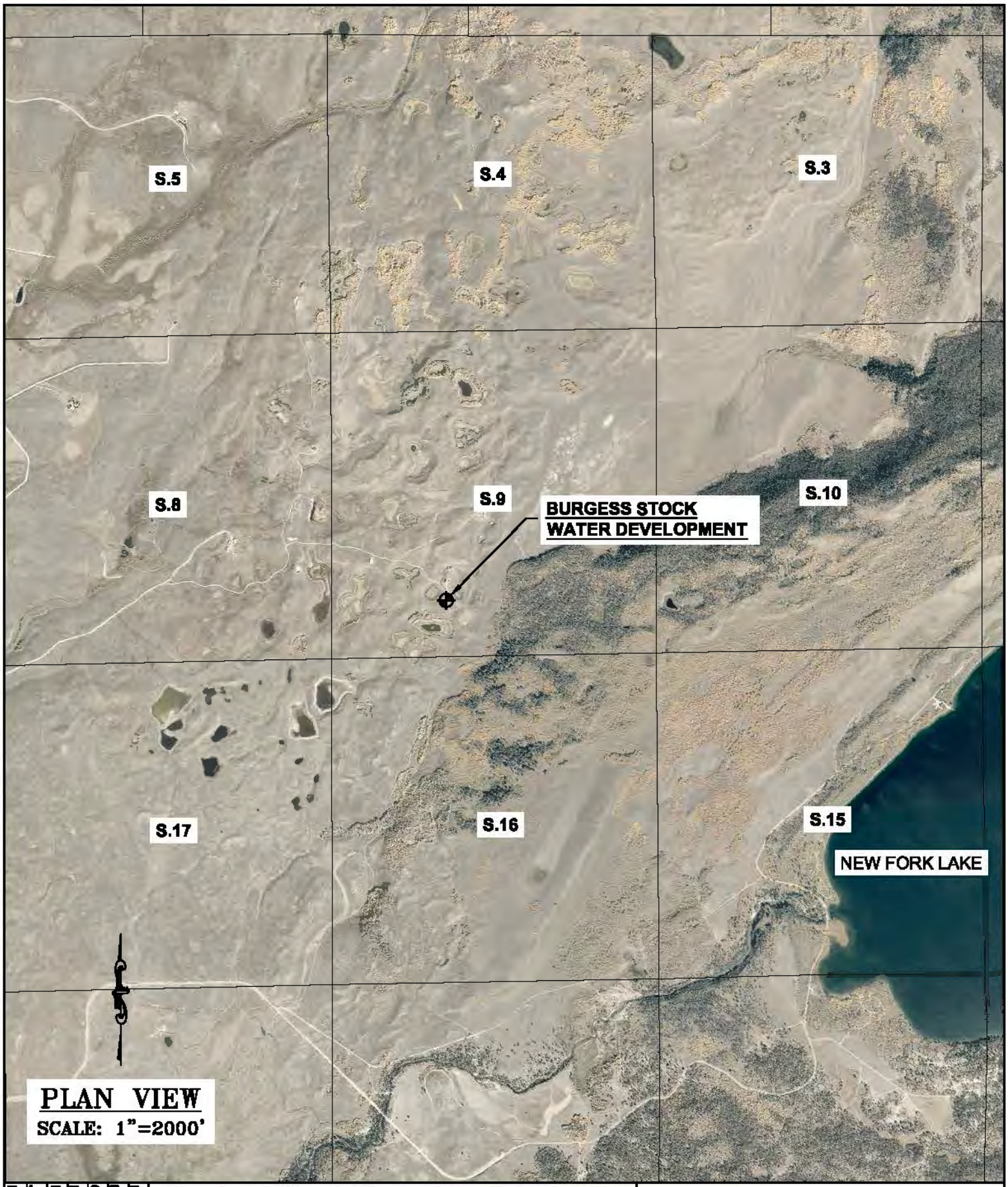

PAGE: 1 OF 2	DESIGNED BY: MTJ
JOB NO: 4183	DRAWN BY: MTJ
REV:	CHECKED BY: MCE
DATE: 7/07/17	

WWDC–NEW FORK RIVER WATERSHED
MASTER PLAN–LEVEL I STUDY
BURGESS (STOCK WATER DEVELOPMENT EXHIBIT)
LOCATED IN SECTION 9, T.36N., R.110W.,
SUBLETTE COUNTY, WY

RIO VERDE ENGINEERING
(307) 367-2828
FAX# (307)-367-2546
PINEDALE, WYOMING

WWDC–NEW FORK RIVER WATERSHED MASTER PLAN–LEVEL I STUDY

BURGESS (STOCK WATER DEVELOPMENT EXHIBIT)
LOCATED IN SECTION 9, T.36N., R.110W.,
SUBLETTE COUNTY, WY

DESIGNED BY: MTJ
DRAWN BY: MTJ
CHECKED BY: MCE
DATE: 7/07/17
REV:
JOB NO: 4183
PAGE: 2 OF 2

RIO VERDE ENGINEERING
(307) 367-2826
FAX# (307)-367-2546
PINEDALE, WYOMING

DISCLAIMER:

FIELD VERIFICATION IS NEEDED REGARDING WATER ZONES, STATIC WATER LEVEL, WATER YIELD, & DRAW DOWN. ACTUAL WELL DEPTHS AND POWER REQUIREMENTS WILL VARY.

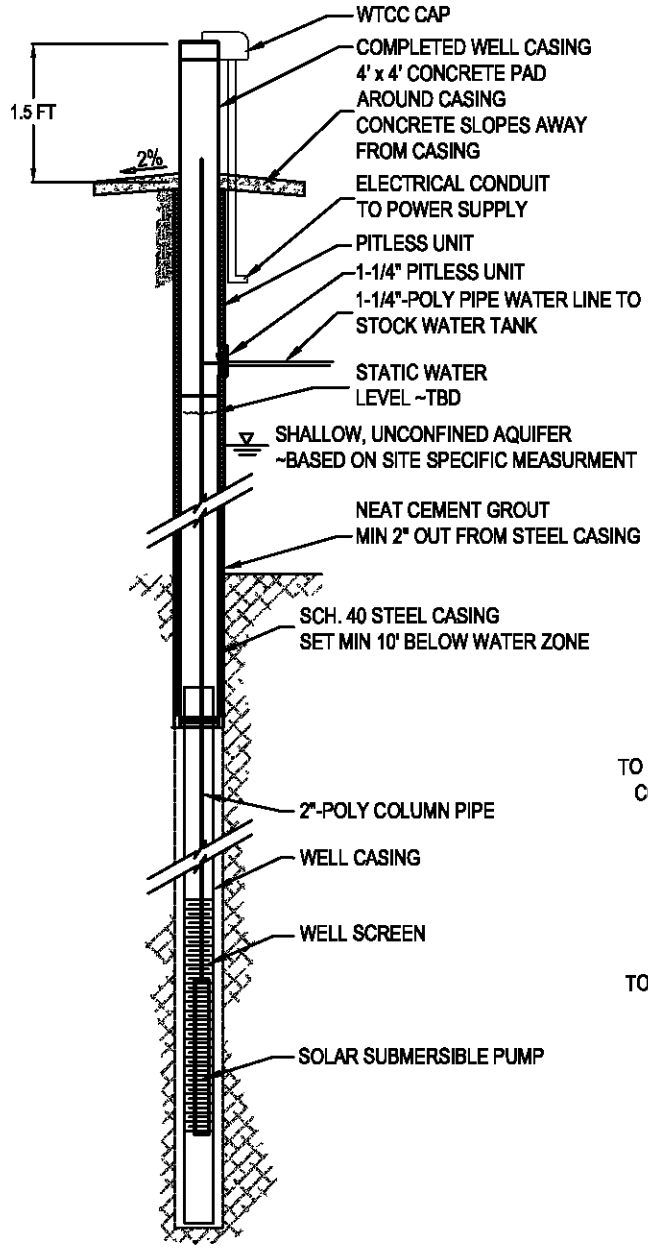

TYPICAL WELL

NOT TO SCALE

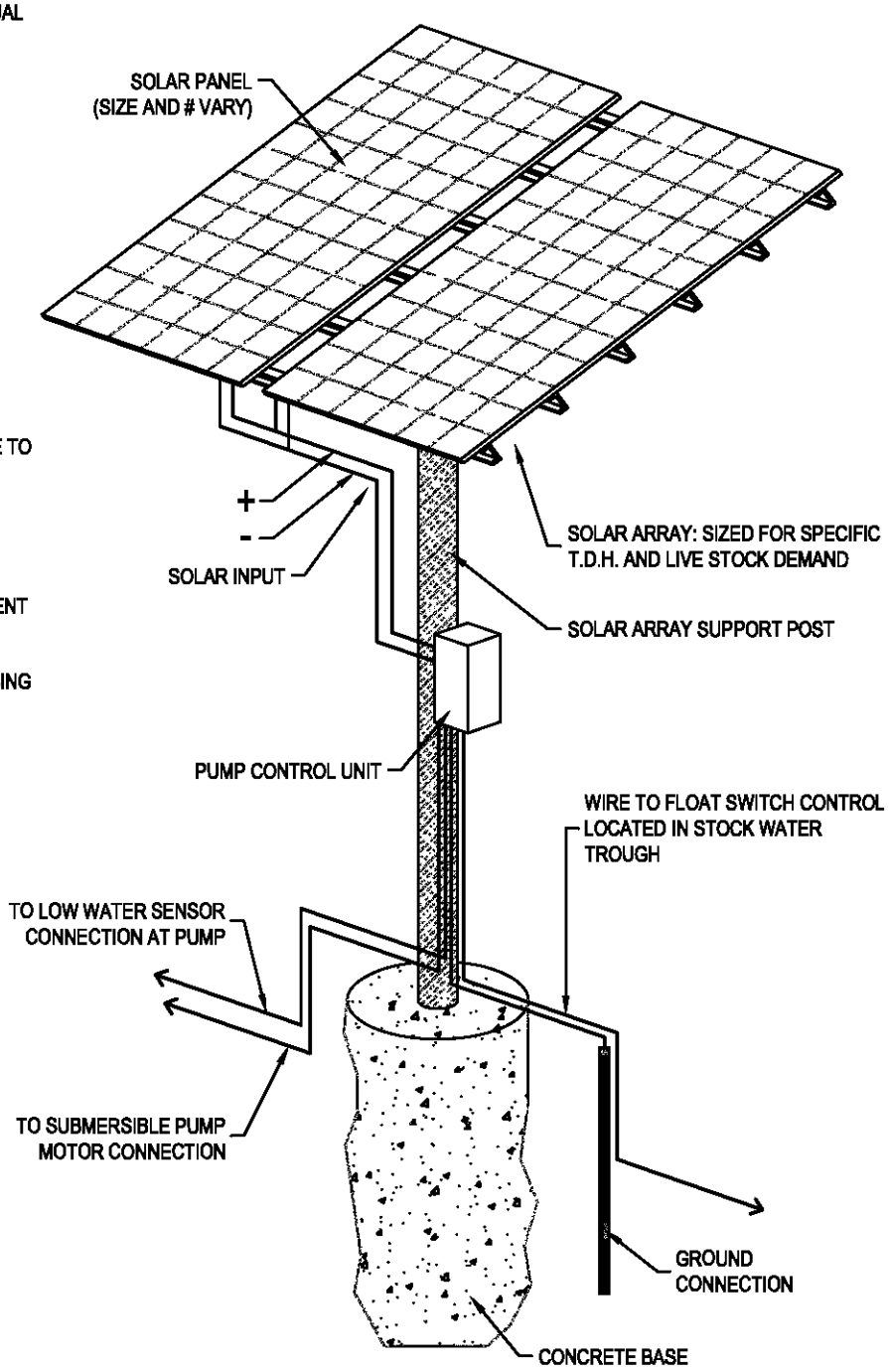

TYPICAL SOLAR ARRAY

NOT TO SCALE

DESIGNED BY:	
DRAWN BY: MTJ	
CHECKED BY: MCE	
DATE: 6/05/17	
REV:	
JOB NO: 4183	
PAGE: 1 OF 1	

STANDARD DETAIL
SOLAR POWERED STOCK WATERING SYSTEM

RIO VERDE ENGINEERING
(307) 367-2826
FAX# (307)-367-2546
PINEDALE, WYOMING

PROJECT STAKEHOLDER

CL BAR RANCH

NEW FORK RIVER WATERSHED STUDY LEVEL I

Owner/Operator: CL Bar Ranch
Project Type: Source Water Development
Project ID: 38
Project Name: Thompson Butte Stock Water Well Development
Location (PLSS): Sec. 18, T.35N., R.110W.
Location (Lat/Long): 42.99939°, 110.02158°

PROJECT COMPONENTS - ITEMIZED COSTS

ITEM No.	DESCRIPTION	QUANTITY	UNIT	UNIT COST	TOTAL COST
1	Mobilization	1	LS	$ 4,500.00	$ 4,500.00
2	Bonds	1	LS	$ 1,000.00	$ 1,000.00
2	Well Drilling	350	LF	$ 65.00	$ 22,750.00
3	Pump Test	1	LS	$ 3,500.00	$ 3,500.00
4	Submersible Pump & Equipment	1	LS	$ 3,600.00	$ 3,600.00
5	Solar Array (Complete)	1	LS	$ 6,800.00	$ 6,800.00
6	4-Rail Pole Fence	100	LF	$ 8.50	$ 850.00
7	2,000 Gal Tire Trough (Complete)	1	LS	$ 10,000.00	$ 10,000.00
8	1-1/4" SDR 11 Pipe	60	LF	$ 3.05	$ 183.00
9	4" SDR 11 Pipe	150	LF	$ 6.95	$ 1,042.50
				TOTAL COMPONENT COST (SUBTOTAL #2):	$ 54,225.50

PREPARATION OF FINAL DESIGNS & SPECIFICATIONS:	$ 1,200.00
PERMITTING AND MITIGATION:	$ 800.00
LEGAL FEES:	$ -
ACQUISTION OF ACCESS AND RIGHTS-OF-WAY:	$ -
PRE-CONSTRUCTION COSTS (**SUBTOTAL #1**):	$ 2,000.00
TOTAL COMPONENT COST **(SUBTOTAL #2**):	$ 54,225.50
CONSTRUCTION ENGINEERING COST (SUBTOTAL #2 x 10%):	$ 5,422.55
COMPONENTS AND ENGINEERING COSTS (**SUBTOTAL #3**):	$ 59,648.05
CONTINGENCY (SUBTOTAL #3 X 15%):	$ 8,947.21
TOTAL CONSTRUCTION COST (**SUBTOTAL #4**):	$ 68,595.26
TOTAL PROJECT COST (**SUBTOTAL #1 + SUBTOTAL #4**):	**$ 70,595.26**

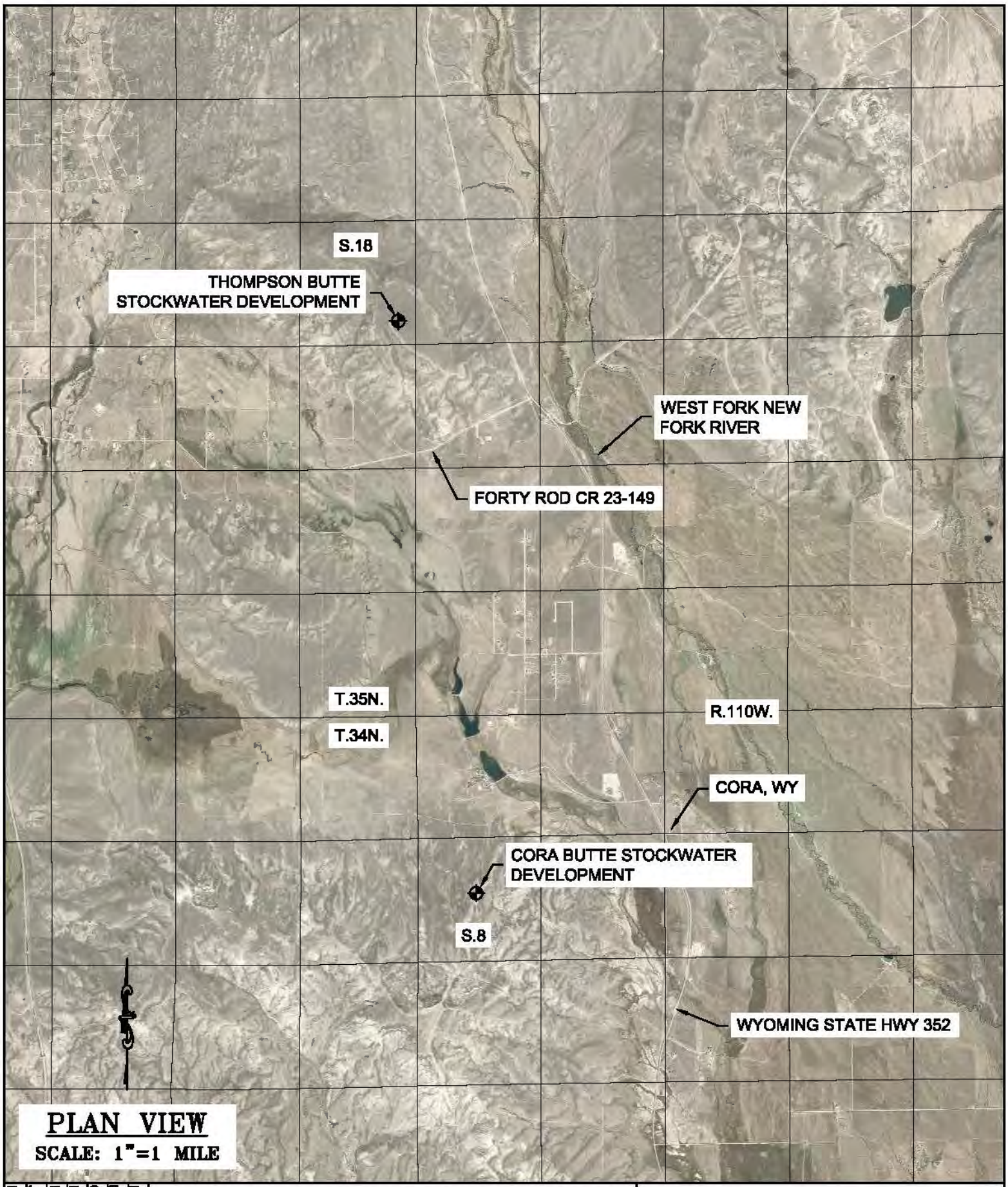

PLAN VIEW

SCALE: 1"=1 MILE

PAGE: 1 OF 2	
JOB NO: 4183	
REV:	
DATE: 7/05/17	
CHECKED BY: MCE	
DRAWN BY: MTJ	
DESIGNED BY: MTJ	

WWDC–NEW FORK RIVER WATERSHED
MASTER PLAN–LEVEL I STUDY

CL BAR RANCH (PROJECT VICINITY MAP)
LOCATED IN T.34N., R.110W., & T.35N., R.110W.,
SUBLETTE COUNTY, WY

RIO VERDE ENGINEERING
(307) 367-2826
FAX# (307)-367-2548
PINEDALE, WYOMING

WWDC–NEW FORK RIVER WATERSHED
MASTER PLAN–LEVEL I STUDY

CL BAR RANCH (THOMPSON BUTTE STOCKWATER WELL)
LOCATED IN SECTION 18, T.35N., R.110W.,
SUBLETTE COUNTY, WY

RIO VERDE ENGINEERING
PINEDALE, WYOMING
(307) 367–2826
FAX# (307)–367–2546

DESIGNED BY: MTJ
DRAWN BY: MTJ
CHECKED BY: MCE
DATE: 7/07/17
REV:
JOB NO: 4183
PAGE: 2 OF 2

DISCLAIMER:

FIELD VERIFICATION IS NEEDED REGARDING WATER ZONES, STATIC WATER LEVEL, WATER YIELD, & DRAW DOWN. ACTUAL WELL DEPTHS AND POWER REQUIREMENTS WILL VARY.

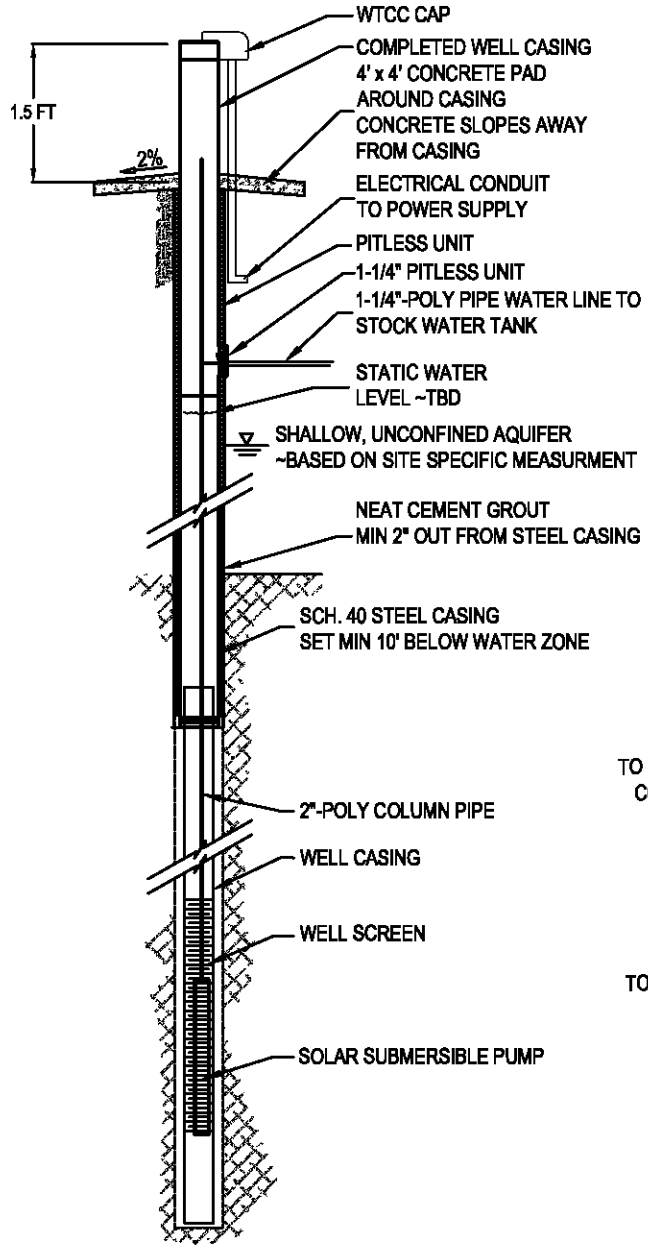

TYPICAL WELL

NOT TO SCALE

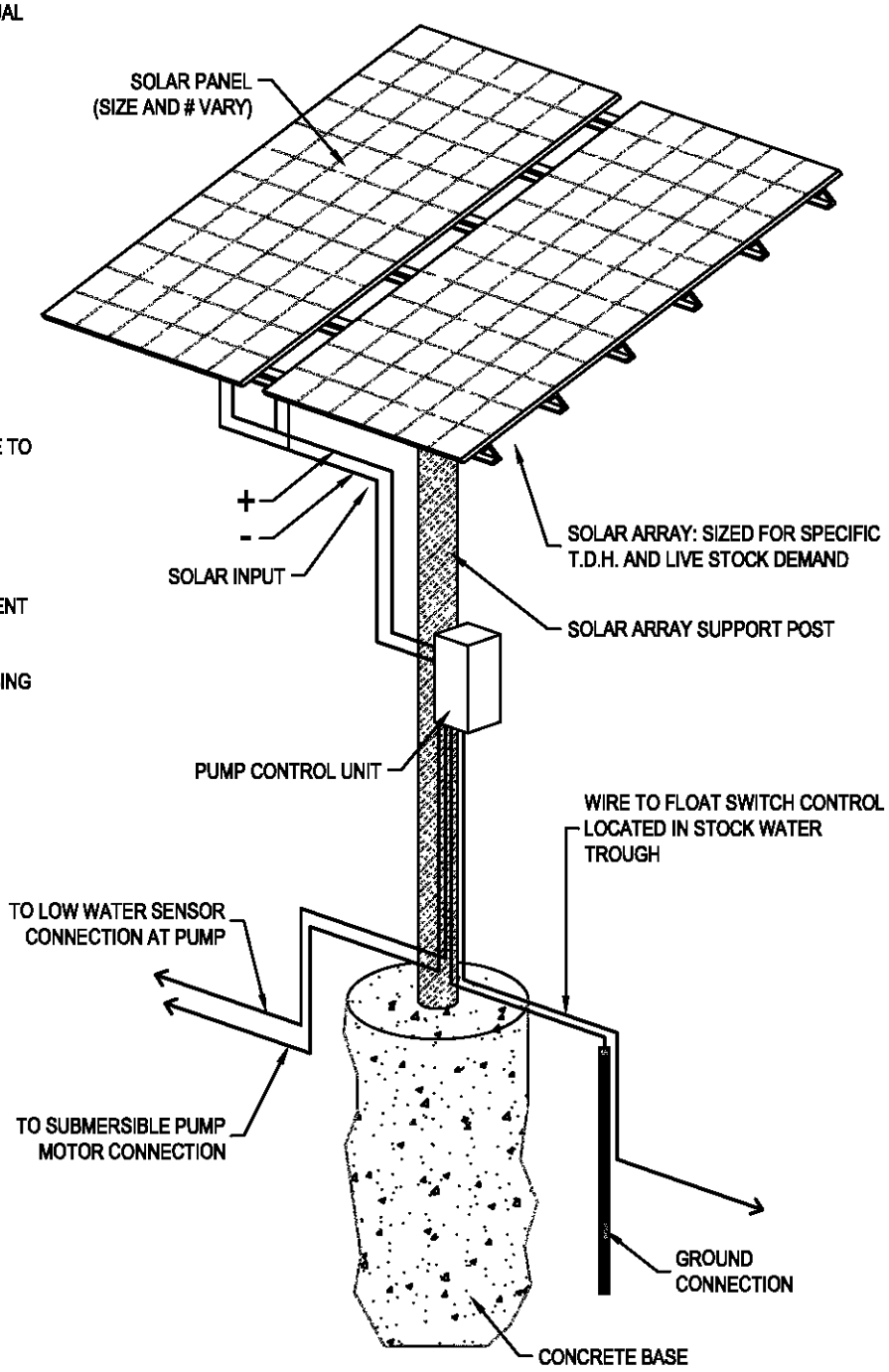

TYPICAL SOLAR ARRAY

NOT TO SCALE

DESIGNED BY:	
DRAWN BY: MTJ	
CHECKED BY: MCE	
DATE: 6/05/17	
REV:	
JOB NO: 4183	
PAGE: 1 OF 1	

STANDARD DETAIL
SOLAR POWERED STOCK WATERING SYSTEM

RIO VERDE ENGINEERING
(307) 367-2826
FAX# (307)-367-2546
PINEDALE, WYOMING

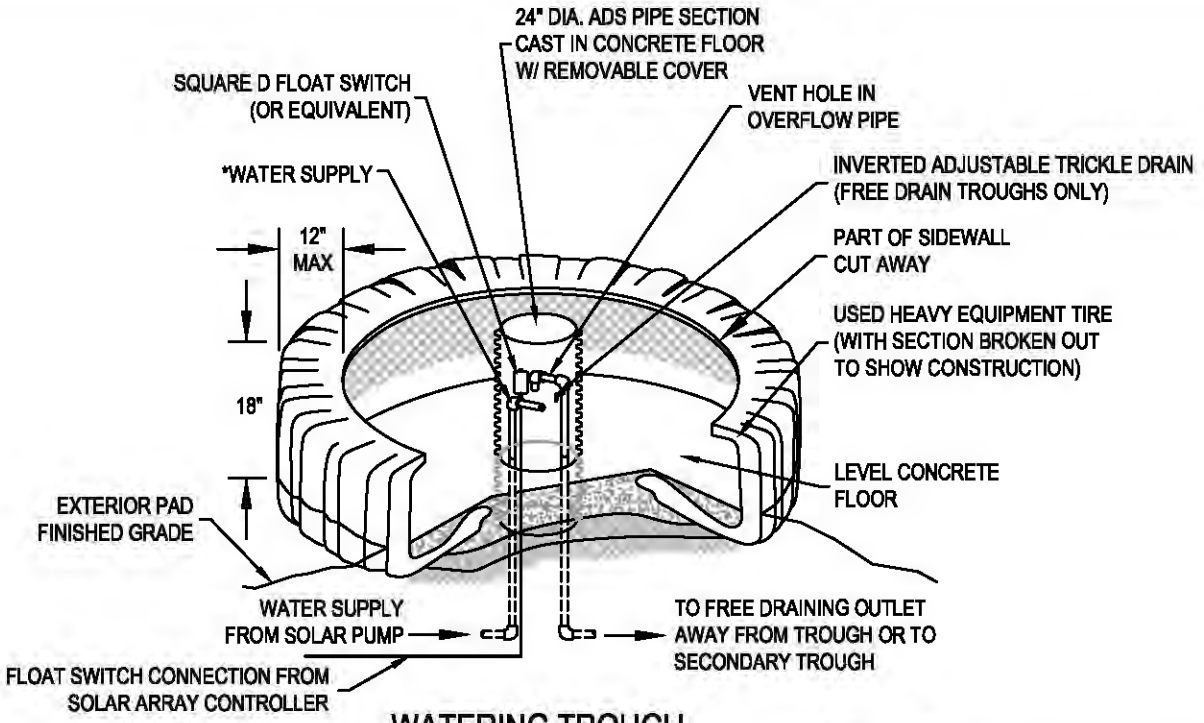

WATERING TROUGH
ISOMETRIC VIEW
N.T.S.

INFLOW PIPE DIA. - 1-1/2" (PRESSURE)

OVERFLOW PIPE DIA. - 4 IN.

CONCRETE SLAB THICKNESS - 6 IN.

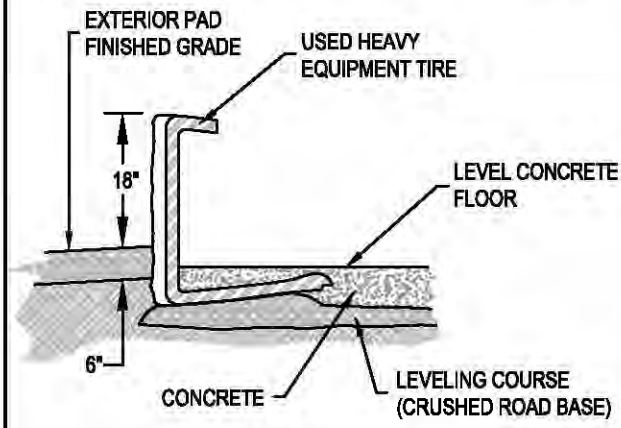

SECTION VIEW
N.T.S.

*TO REDUCE FREEZING, POINT THE INFLOW IN THE DIRECTION THAT WILL CAUSE THE MOST WATER MOVEMENT.

INSTALLATION NOTES

1.) CUT AWAY PART OF SIDEWALL. THIS WILL BE THE TOP OF THE TROUGH

2.) USE THE CRUSHED ROAD BASE TO FILL AROUND THE PIPES AND TO LEVEL THE TIRE.

3.) POUR CONCRETE AROUND ADS PIPE, WATER SUPPLY, OVERFLOW PIPES AND WORK UNDER INTERIOR EDGE OF TIRE. FINISH THE TOP SURFACE OF CONCRETE TO FORM A LEVEL PAD ACROSS THE TROUGH BOTTOM.

4.) PROVIDE AN ESCAPE DEVICE FOR SMALL BIRDS AND ANIMALS THAT MAY BECOME ENTRAPPED. A RAMP CONSTRUCTED OF A PIECE OF EXPANDED METAL EXTENDING FROM THE WATER SURFACE TO THE TOP SIDEWALL OR A FLOAT CONSISTING OF A PIECE OF LUMBER ARE TWO DEVICES THAT COULD BE USED.

5.) EXTEND CRUSHED ROAD BASE PAD 6 FT. OUT FROM EXTERIOR TIRE EDGE

*DESIGN BASED ON NRCS STANDARDIZED DRAWING AND DESIGN INPUT FROM BROGAN HYDROLOGIC CONSULTING. DESIGN MUST BE ADAPTED TO MEET SITE SPECIFIC CONDITIONS.

PAGE: 1 OF 1	
JOB NO: 4183	
REV:	
DATE: 4/21/17	
CHECKED BY: MCE	
DRAWN BY: MTJ	
DESIGNED BY:	

STANDARD DETAIL
HEAVY EQUIPMENT TIRE TROUGH

U.S.D.A. NATURAL RESOURCES CONSERVATION SERVICE

RIO VERDE ENGINEERING
(307) 367-2826
FAX (307)-367-2846 PINEDALE, WYOMING

NEW FORK RIVER WATERSHED STUDY LEVEL I

Owner/Operator: CL Bar Ranch
Project Type: Source Water Development
Project ID: 39
Project Name: Cora Butte Stock Water Well Development
Location (PLSS): Sec. 8, T.34N., R.110W.
Location (Lat/Long): 42.92676°, 110.01716°

PROJECT COMPONENTS - ITEMIZED COSTS

ITEM No.	DESCRIPTION	QUANTITY	UNIT	UNIT COST	TOTAL COST
1	Mobilization	1	LS	$ 4,000.00	$ 4,000.00
2	Bonds	1	LS	$ 1,000.00	$ 1,000.00
2	Well Drilling	350	LF	$ 65.00	$ 22,750.00
3	Pump Test	1	LS	$ 3,500.00	$ 3,500.00
4	Submersible Pump & Equipment	1	LS	$ 3,600.00	$ 3,600.00
5	Solar Array (Complete)	1	LS	$ 6,800.00	$ 6,800.00
6	4-Rail Pole Fence	100	LF	$ 8.50	$ 850.00
7	2,000 Gal Tire Trough (Complete)	1	LS	$ 10,000.00	$ 10,000.00
8	1-1/4" SDR 11 Pipe	50	LF	$ 3.05	$ 152.50
9	4" SDR 11 Pipe	120	LF	$ 6.95	$ 834.00
				TOTAL COMPONENT COST (SUBTOTAL #2):	$ 53,486.50

PREPARATION OF FINAL DESIGNS & SPECIFICATIONS:	$ 800.00
PERMITTING AND MITIGATION:	$ 800.00
LEGAL FEES:	$ -
ACQUISTION OF ACCESS AND RIGHTS-OF-WAY:	$ -
PRE-CONSTRUCTION COSTS (**SUBTOTAL #1**):	$ 1,600.00
TOTAL COMPONENT COST **(SUBTOTAL #2**):	$ 53,486.50
CONSTRUCTION ENGINEERING COST (SUBTOTAL #2 x 10%):	$ 5,348.65
COMPONENTS AND ENGINEERING COSTS (**SUBTOTAL #3**):	$ 58,835.15
CONTINGENCY (SUBTOTAL #3 X 15%):	$ 8,825.27
TOTAL CONSTRUCTION COST (**SUBTOTAL #4**):	$ 67,660.42
TOTAL PROJECT COST (**SUBTOTAL #1 + SUBTOTAL #4**):	**$ 69,260.42**

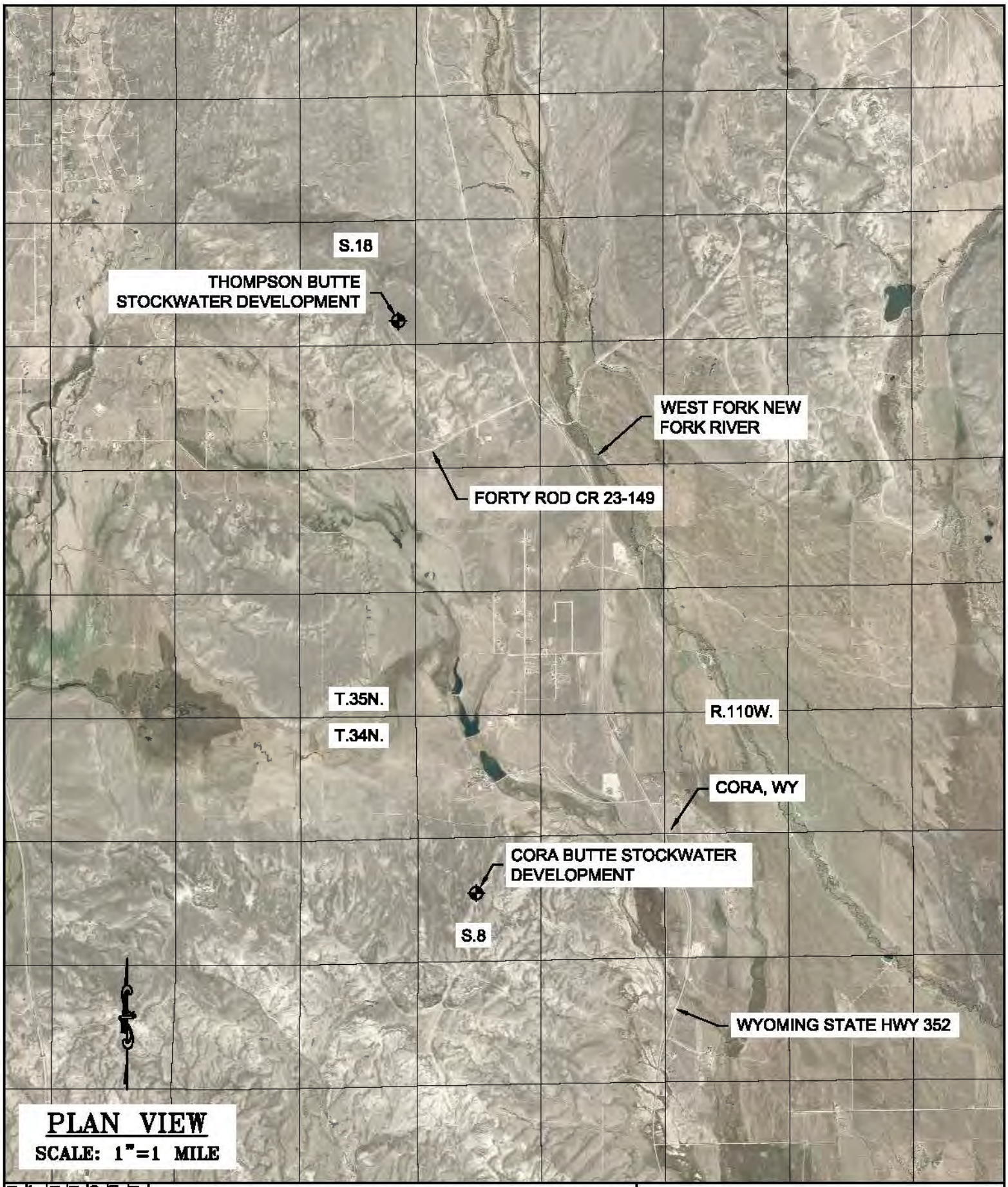

PLAN VIEW

SCALE: 1"=1 MILE

PAGE: 1 OF 2	
JOB NO: 4183	
REV:	
DATE: 7/05/17	
CHECKED BY: MCE	
DRAWN BY: MTJ	
DESIGNED BY: MTJ	

WWDC–NEW FORK RIVER WATERSHED
MASTER PLAN–LEVEL I STUDY

CL BAR RANCH (PROJECT VICINITY MAP)
LOCATED IN T.34N., R.110W., & T.35N., R.110W.,
SUBLETTE COUNTY, WY

RIO VERDE ENGINEERING
(307) 367-2826
FAX# (307)-367-2548
PINEDALE, WYOMING

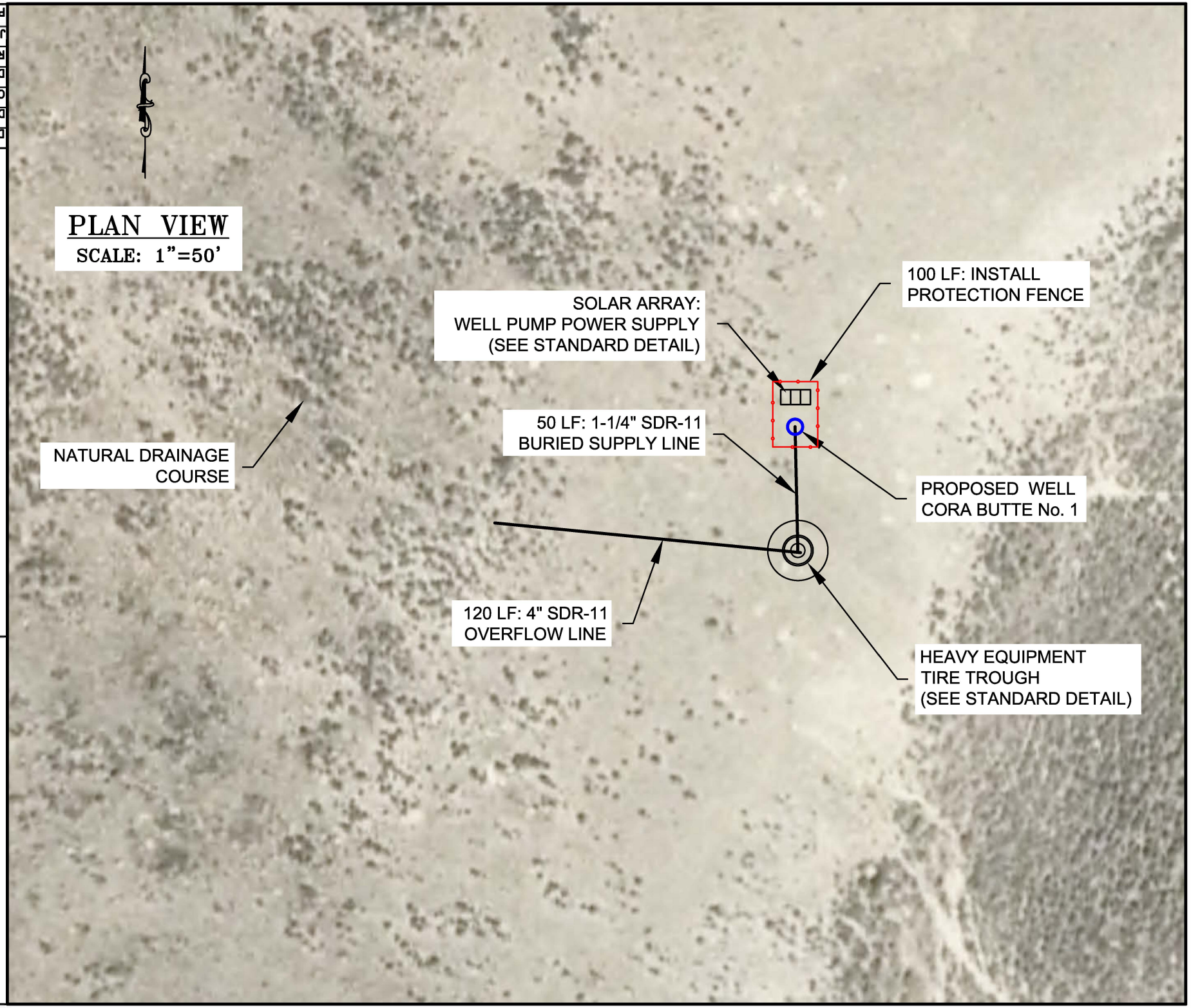

WWDC–NEW FORK RIVER WATERSHED
MASTER PLAN–LEVEL I STUDY
CL BAR RANCH (CORA BUTTE STOCK WATER WELL)
LOCATED IN SECTION 8, T.34N., R.110W.,
SUBLETTE COUNTY, WY

DESIGNED BY: MTJ
DRAWN BY: MTJ
CHECKED BY: MCE
DATE: 7/07/17
REV:
JOB NO: 4183
PAGE: 2 OF 2

RIO VERDE
ENGINEERING
PINEDALE, WYOMING
(307) 367-2826
FAX# (307)-367-2546

DISCLAIMER:

FIELD VERIFICATION IS NEEDED REGARDING WATER ZONES, STATIC WATER LEVEL, WATER YIELD, & DRAW DOWN. ACTUAL WELL DEPTHS AND POWER REQUIREMENTS WILL VARY.

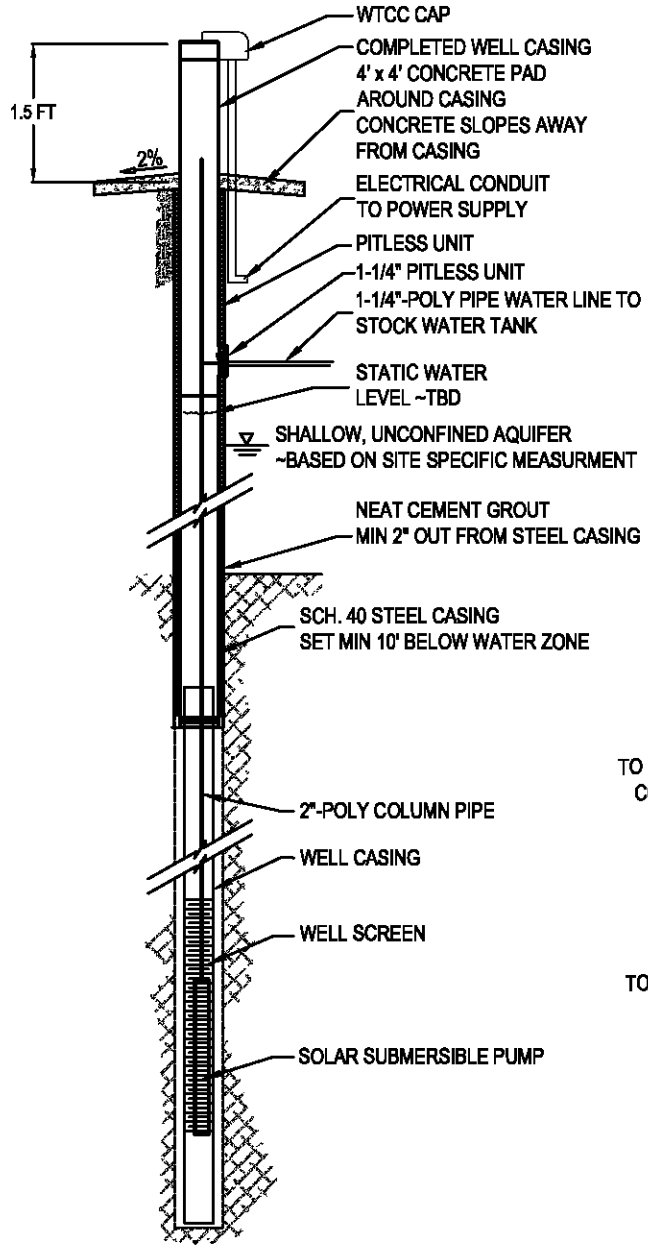

TYPICAL WELL

NOT TO SCALE

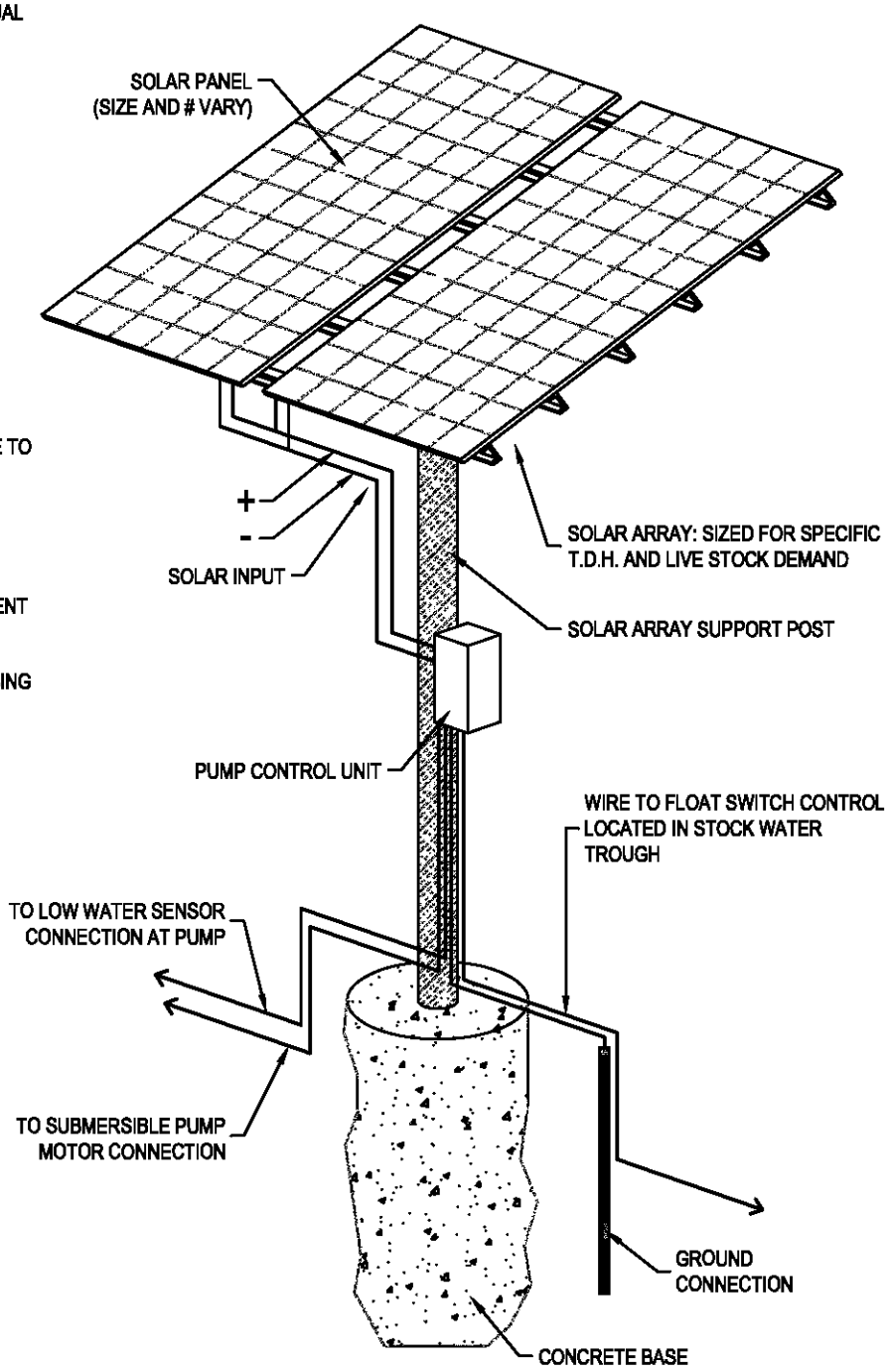

TYPICAL SOLAR ARRAY

NOT TO SCALE

DESIGNED BY:	
DRAWN BY: MTJ	
CHECKED BY: MCE	
DATE: 6/05/17	
REV:	
JOB NO: 4183	
PAGE: 1 OF 1	

STANDARD DETAIL
SOLAR POWERED STOCK WATERING SYSTEM

RIO VERDE ENGINEERING
(307) 367-2826
FAX# (307)-367-2546
PINEDALE, WYOMING

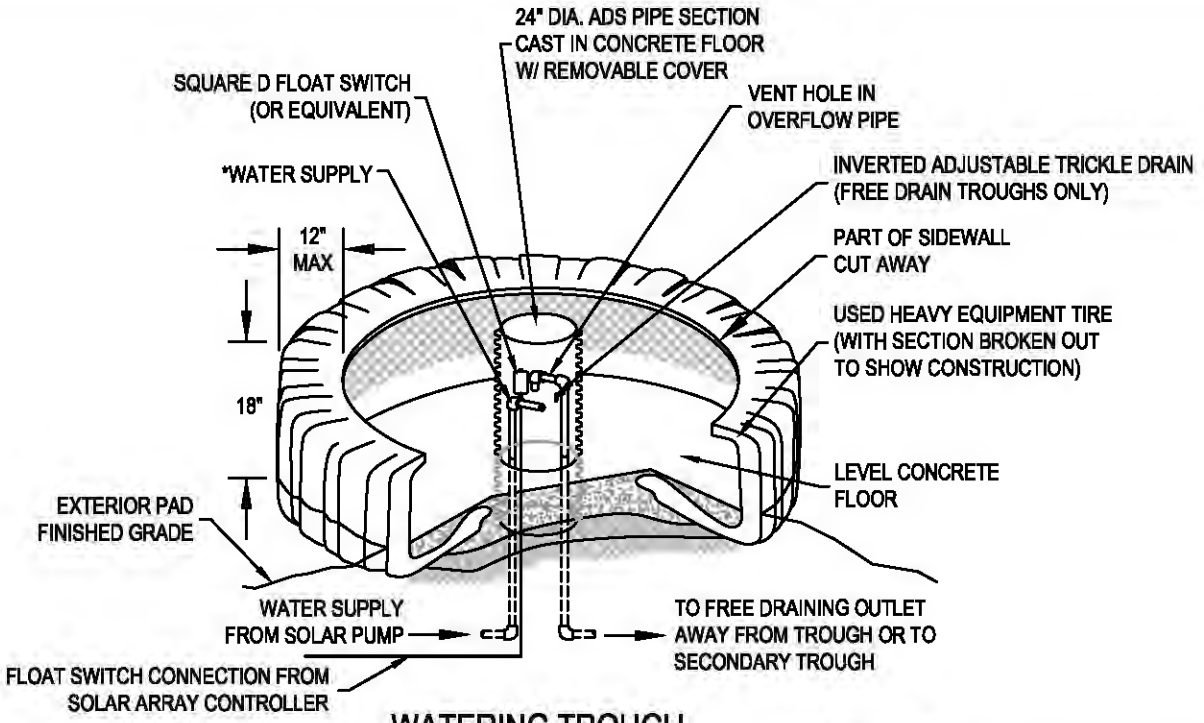

WATERING TROUGH
ISOMETRIC VIEW
N.T.S.

INFLOW PIPE DIA. - 1-1/2" (PRESSURE)

OVERFLOW PIPE DIA. - 4 IN.

CONCRETE SLAB THICKNESS - 6 IN.

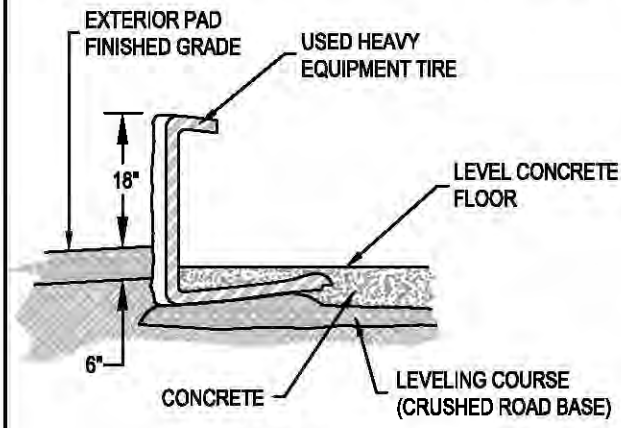

SECTION VIEW
N.T.S.

*TO REDUCE FREEZING, POINT THE INFLOW IN THE DIRECTION THAT WILL CAUSE THE MOST WATER MOVEMENT.

INSTALLATION NOTES

1.) CUT AWAY PART OF SIDEWALL. THIS WILL BE THE TOP OF THE TROUGH

2.) USE THE CRUSHED ROAD BASE TO FILL AROUND THE PIPES AND TO LEVEL THE TIRE.

3.) POUR CONCRETE AROUND ADS PIPE, WATER SUPPLY, OVERFLOW PIPES AND WORK UNDER INTERIOR EDGE OF TIRE. FINISH THE TOP SURFACE OF CONCRETE TO FORM A LEVEL PAD ACROSS THE TROUGH BOTTOM.

4.) PROVIDE AN ESCAPE DEVICE FOR SMALL BIRDS AND ANIMALS THAT MAY BECOME ENTRAPPED. A RAMP CONSTRUCTED OF A PIECE OF EXPANDED METAL EXTENDING FROM THE WATER SURFACE TO THE TOP SIDEWALL OR A FLOAT CONSISTING OF A PIECE OF LUMBER ARE TWO DEVICES THAT COULD BE USED.

5.) EXTEND CRUSHED ROAD BASE PAD 6 FT. OUT FROM EXTERIOR TIRE EDGE

*DESIGN BASED ON NRCS STANDARDIZED DRAWING AND DESIGN INPUT FROM BROGAN HYDROLOGIC CONSULTING. DESIGN MUST BE ADAPTED TO MEET SITE SPECIFIC CONDITIONS.

PAGE: 1 OF 1	
JOB NO: 4183	
REV:	
DATE: 4/21/17	
CHECKED BY: MCE	
DRAWN BY: MTJ	
DESIGNED BY:	

STANDARD DETAIL
HEAVY EQUIPMENT TIRE TROUGH

U.S.D.A. NATURAL RESOURCES CONSERVATION SERVICE

RIO VERDE ENGINEERING
(307) 367-2826
FAX (307)-367-2846 PINEDALE, WYOMING

PROJECT STAKEHOLDER

CORA VALLEY ANGUS RANCH

NEW FORK RIVER WATERSHED STUDY LEVEL I

Owner/Operator: Cora Valley Angus
Project Type: Irrigation
Project ID: 68
Project Name: Alexander Ditch Check Structure Rehabilitation Project
Location (PLSS): Sec. 34, T.35N., R.110W.
Location (Lat/Long): 42.95879°, 109.96979°

PROJECT COMPONENTS - ITEMIZED COSTS

ITEM No.	DESCRIPTION	QUANTITY	UNIT	UNIT COST	TOTAL COST
1	Mobilization	1	LS	$ 1,500.00	$ 1,500.00
2	Bonds	1	LS	$ 500.00	$ 500.00
3	Remove & Haul Off Old Check	1	LS	$ 1,100.00	$ 1,100.00
4	Remove & Haul Off 24" CMP	1	LS	$ 450.00	$ 450.00
5	Misc. Excavation	65	CY	$ 26.00	$ 1,690.00
6	Clearing & Grubbing	45	SY	$ 18.00	$ 810.00
7	Temporary Coffer Dam	1	LS	$ 1,600.00	$ 1,600.00
8	Check Structure (Concrete)	1	LS	$ 6,100.00	$ 6,100.00
9	Steel Grate Walk Way (2' x 23')	1	LS	$ 900.00	$ 900.00
10	Rock Rip-Rap	50	CY	$ 42.00	$ 2,100.00
				TOTAL COMPONENT COST (SUBTOTAL #2):	$ 16,750.00

PREPARATION OF FINAL DESIGNS & SPECIFICATIONS:	$ 1,600.00
PERMITTING AND MITIGATION:	$ 600.00
LEGAL FEES:	$ -
ACQUISTION OF ACCESS AND RIGHTS-OF-WAY:	$ -
PRE-CONSTRUCTION COSTS (**SUBTOTAL #1**):	$ 2,200.00
TOTAL COMPONENT COST (**SUBTOTAL #2**):	$ 16,750.00
CONSTRUCTION ENGINEERING COST (SUBTOTAL #2 x 10%):	$ 1,675.00
COMPONENTS AND ENGINEERING COSTS (**SUBTOTAL #3**):	$ 18,425.00
CONTINGENCY (SUBTOTAL #3 X 15%):	$ 2,763.75
TOTAL CONSTRUCTION COST (**SUBTOTAL #4**):	$ 21,188.75
TOTAL PROJECT COST (**SUBTOTAL #1 + SUBTOTAL #4**):	**$ 23,388.75**

DESIGNED BY: MTJ
DRAWN BY: MTJ
CHECKED BY: WCE
DATE: 7/13/17
REV:
JOB NO: 4183
PAGE: 1 OF 3

WWDC–NEW FORK RIVER WATERSHED
MASTER PLAN–LEVEL I STUDY

CORA VALLEY ANGUS (ALEXANDER DITCH CHECK STRUCTURE REHAB) LOCATED IN SECTION 34, T.35N., R.110W., SUBLETTE COUNTY, WY

RIO VERDE ENGINEERING
(307) 367-2826
FAX# (307)-367-2548
PINEDALE, WYOMING

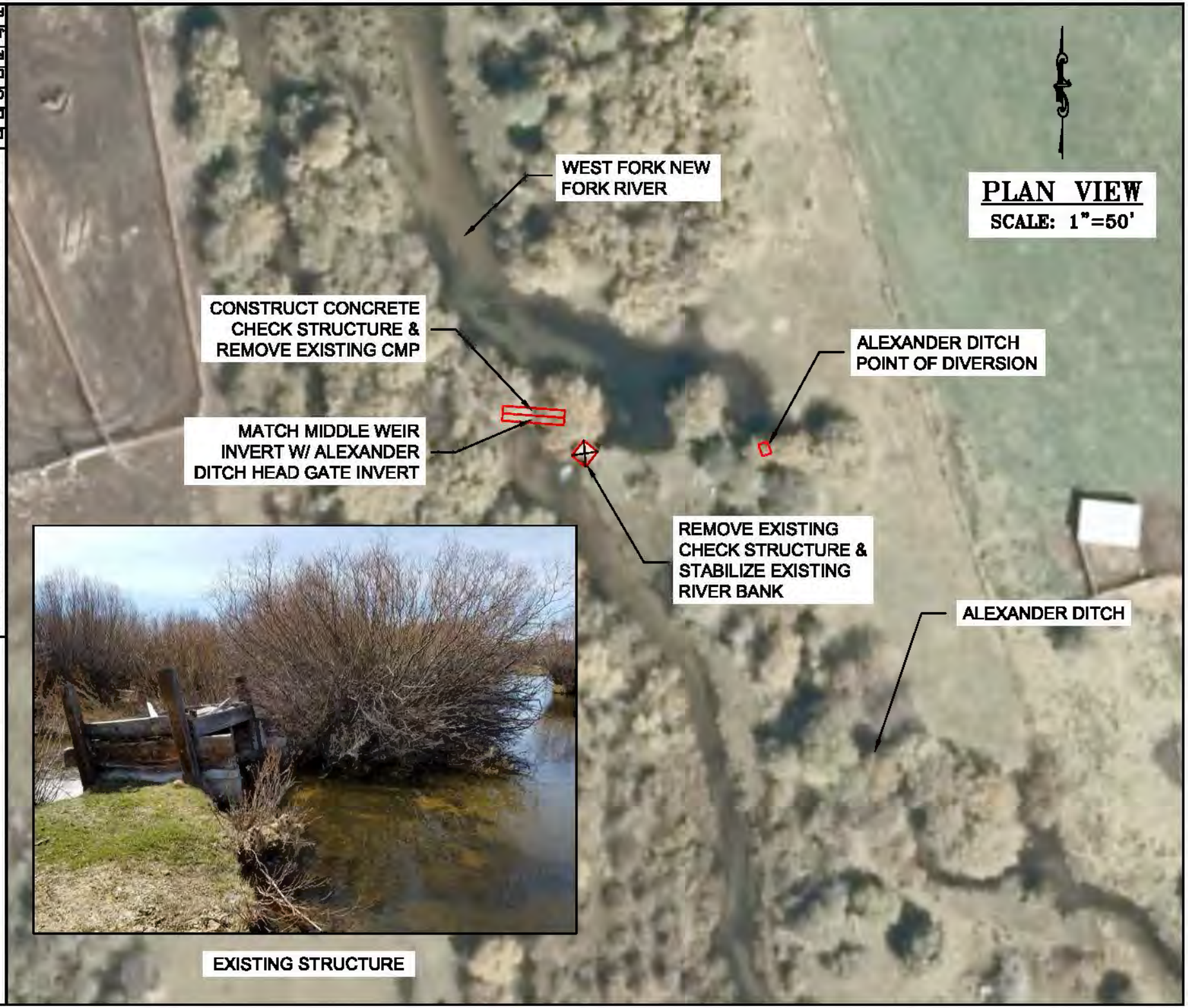

WWDC–NEW FORK RIVER WATERSHED
MASTER PLAN–LEVEL I STUDY
CORA VALLEY ANGUS (ALEXANDER DITCH CHECK STRUCTURE REHAB) LOCATED IN SECTION 34, T.35N., R.110W., SUBLETTE COUNTY, WY

RIO VERDE ENGINEERING
PINEDALE, WYOMING
(307) 367-2829
FAX: (307)-367-2546

DESIGNED BY: MTJ
DRAWN BY: MTJ
CHECKED BY: MCE
DATE: 7/13/17
REV:
JOB NO: 4183
PAGE: 2 OF 3

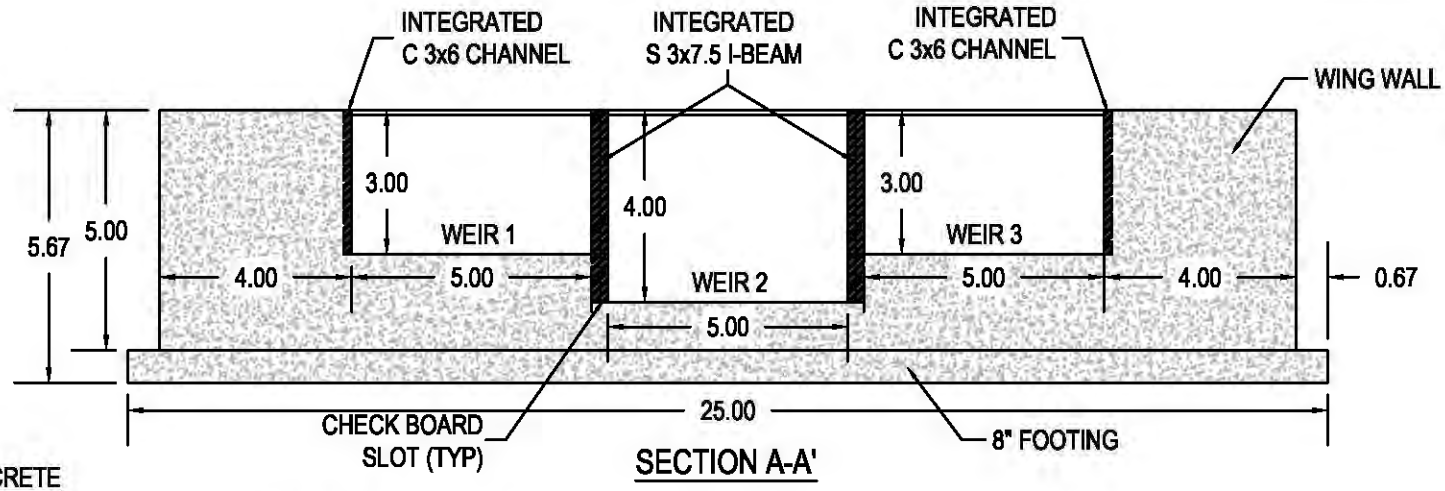

SECTION A-A'

TOTAL CONCRETE
VOLUME: 5.34 CY

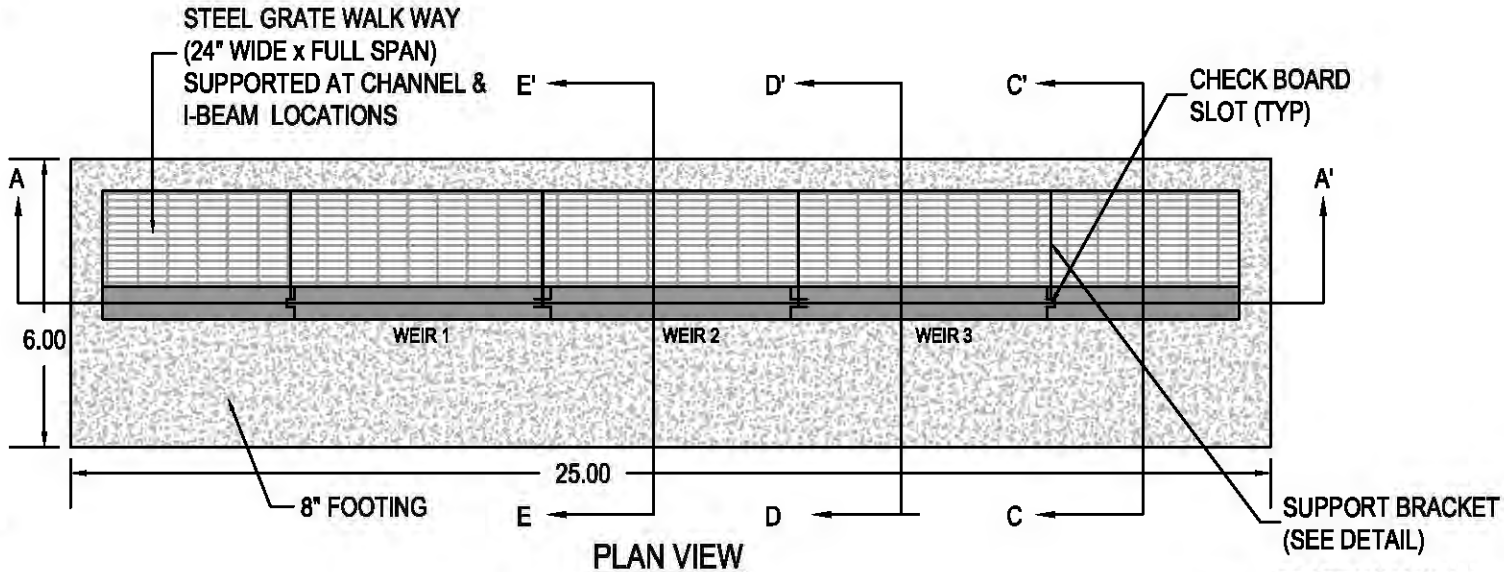

SCALE: 1"=4'

PLAN VIEW

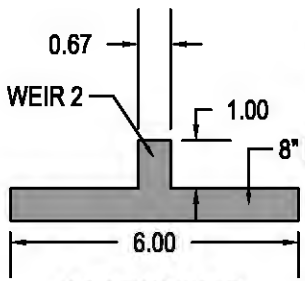

SECTION E-E'

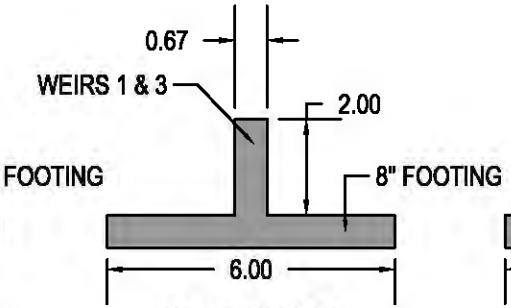

SECTION D-D'

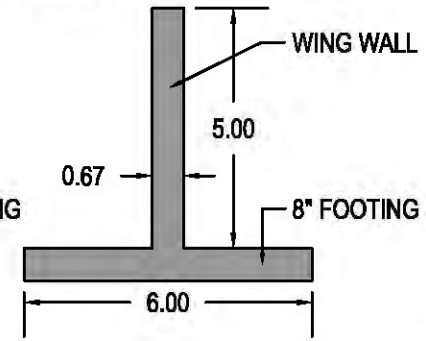

SECTION C-C'

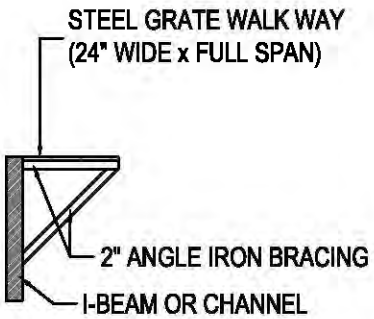

BRACKET DETAIL

WWDC–NEW FORK RIVER WATERSHED
MASTER PLAN–LEVEL I STUDY
CORA VALLEY ANGUS (NEW FORK CHECK
STRUCTURE DETAIL) LOCATED IN SECTION 34,
T.35N., R.110W., SUBLETTE COUNTY, WY

RIO VERDE
ENGINEERING
PINEDALE, WYOMING
(307) 367-2826
FAX/ (307)-367-2546

DESIGNED BY: MTJ
DRAWN BY: MTJ
CHECKED BY: MCE
DATE: 7/17/17
REV:
JOB NO: 4183
PAGE: 3 OF 3

NEW FORK RIVER WATERSHED STUDY LEVEL I

Owner/Operator: Cora Valley Angus
Project Type: Irrigation
Project ID: 69
Project Name: New Fork Primary Check Structure Rehabilitation Project
Location (PLSS): Sec. 34, T.35N., R.110W.
Location (Lat/Long): 42.96089°, 109.97115°

PROJECT COMPONENTS - ITEMIZED COSTS

ITEM No.	DESCRIPTION	QUANTITY	UNIT	UNIT COST	TOTAL COST
1	Mobilization	1	LS	$ 2,500.00	$ 2,500.00
2	Bonds	1	LS	$ 500.00	$ 500.00
3	Remove & Haul Off Old Check	1	LS	$ 2,100.00	$ 2,100.00
5	Misc. Excavation	60	CY	$ 26.00	$ 1,560.00
6	Clearing & Grubbing	40	SY	$ 18.00	$ 720.00
7	Temporary Coffer Dam	1	LS	$ 2,300.00	$ 2,300.00
8	Imported Pit Run	165	CY	$ 13.00	$ 2,145.00
9	Imported Crushed Base	12	TN	$ 24.00	$ 288.00
10	Check Structure (Concrete)	1	LS	$ 13,000.00	$ 13,000.00
11	Steel Grate Walk Way (2.5' x 10')	1	LS	$ 450.00	$ 450.00
12	Rock Rip-Rap	60	CY	$ 42.00	$ 2,520.00
13	Temporary Construction Access	1	LS	$ 1,600.00	$ 1,600.00
				TOTAL COMPONENT COST (SUBTOTAL #2):	$ 29,683.00

PREPARATION OF FINAL DESIGNS & SPECIFICATIONS:	$ 2,300.00
PERMITTING AND MITIGATION:	$ 800.00
LEGAL FEES:	$ -
ACQUISTION OF ACCESS AND RIGHTS-OF-WAY:	$ -
PRE-CONSTRUCTION COSTS (**SUBTOTAL #1**):	$ 3,100.00
TOTAL COMPONENT COST (**SUBTOTAL #2**):	$ 29,683.00
CONSTRUCTION ENGINEERING COST (SUBTOTAL #2 x 10%):	$ 2,968.30
COMPONENTS AND ENGINEERING COSTS (**SUBTOTAL #3**):	$ 32,651.30
CONTINGENCY (SUBTOTAL #3 X 15%):	$ 4,897.70
TOTAL CONSTRUCTION COST (**SUBTOTAL #4**):	$ 37,549.00
TOTAL PROJECT COST (**SUBTOTAL #1 + SUBTOTAL #4**):	**$ 40,649.00**

DESIGNED BY: MTJ
DRAWN BY: MTJ
CHECKED BY: WCE
DATE: 7/13/17
REV:
JOB NO: 4183
PAGE: 1 OF 4

WWDC–NEW FORK RIVER WATERSHED MASTER PLAN–LEVEL I STUDY

CORA VALLEY ANGUS (NEW FORK CHECK STRUCTURE REHAB) LOCATED IN SECTION 34, T.35N., R.110W., SUBLETTE COUNTY, WY

RIO VERDE ENGINEERING
(307) 367-2826
FAX# (307)-367-2548
PINEDALE, WYOMING

PLAN VIEW

SCALE: 1"=50'

WWDC–NEW FORK RIVER WATERSHED

MASTER PLAN–LEVEL I STUDY

CORA VALLEY ANGUS (NEW FORK CHECK STRUCTURE REHAB) LOCATED IN SECTION 34, T.35N., R.110W., SUBLETTE COUNTY, WY

RIO VERDE ENGINEERING
(307) 367-2828
FAX# (307)-367-2546
PINEDALE, WYOMING

DESIGNED BY: MTJ
DRAWN BY: MTJ
CHECKED BY: MCE
DATE: 7/13/17
REV:
JOB NO: 4183
PAGE: 2 OF 4

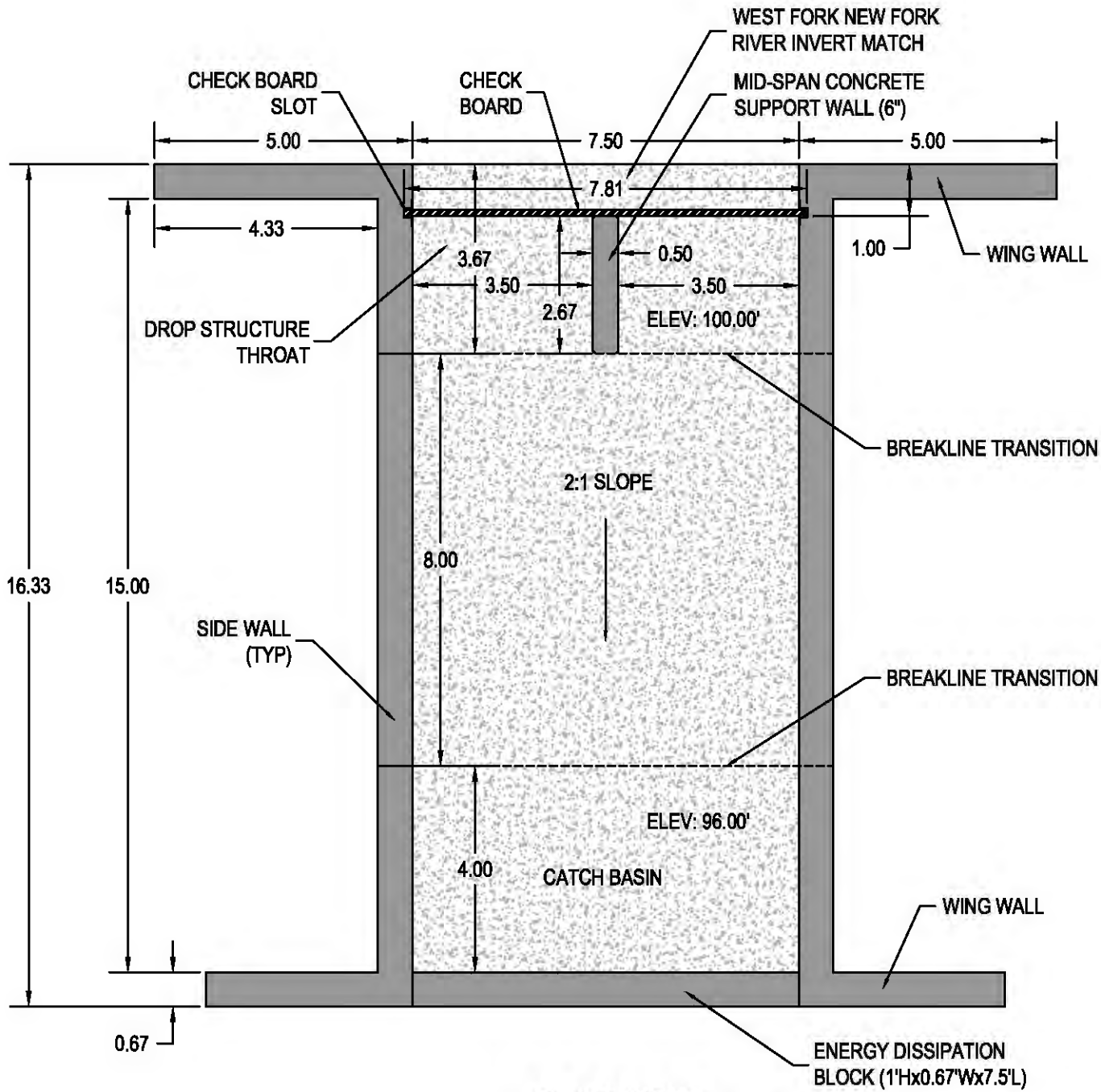

PLAN VIEW

SCALE: 1"=5'

WWDC–NEW FORK RIVER WATERSHED
MASTER PLAN–LEVEL I STUDY
CORA VALLEY ANGUS (NEW FORK CHECK STRUCTURE REHAB) LOCATED IN SECTION 34, T.35N., R.110W., SUBLETTE COUNTY, WY

RIO VERDE ENGINEERING
(307) 367-2828
FAX# (307)-367-2546
PINEDALE, WYOMING

DESIGNED BY: MTJ
DRAWN BY: MTJ
CHECKED BY: MCE
DATE: 7/13/17
REV:
JOB NO: 4183
PAGE: 3 OF 4

SCALE: 1"=4'

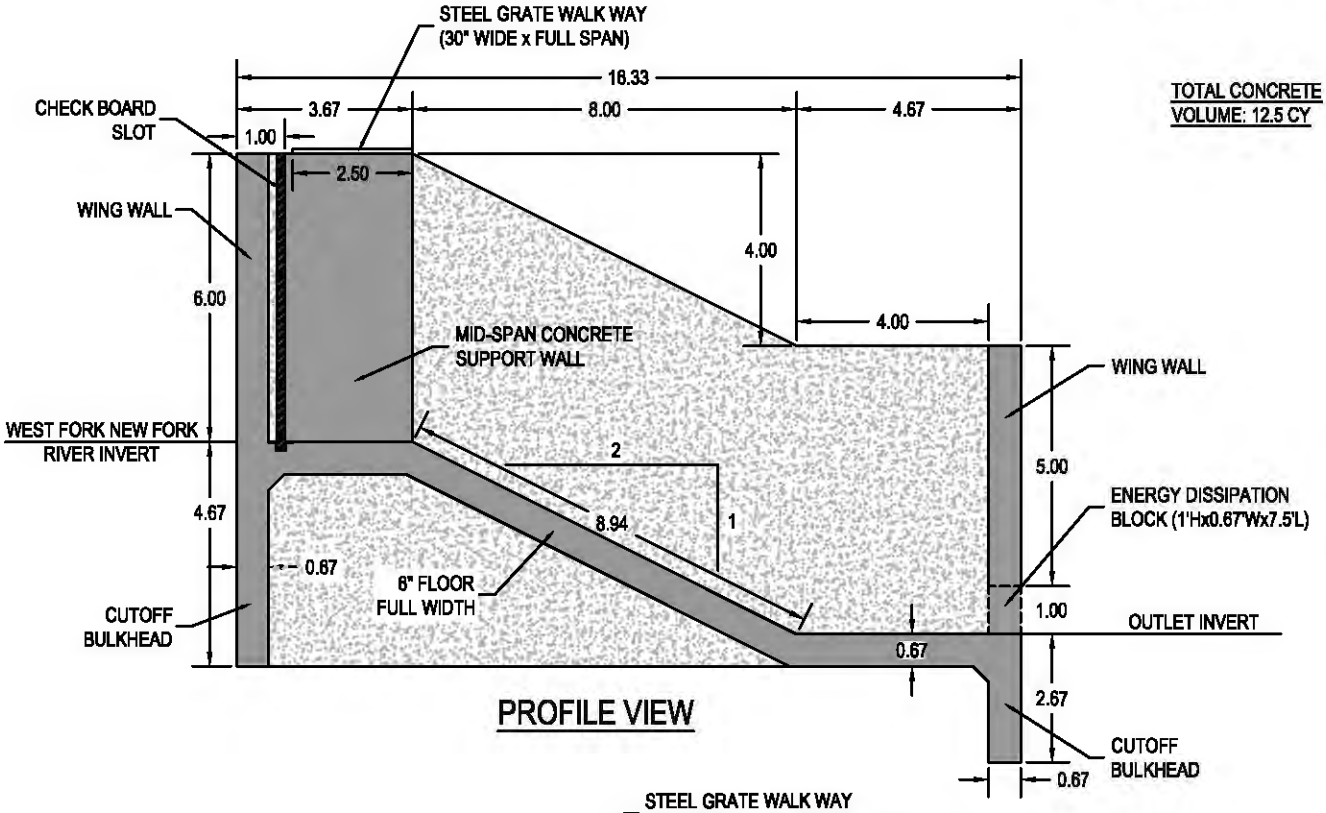

TOTAL CONCRETE VOLUME: 12.5 CY

PROFILE VIEW

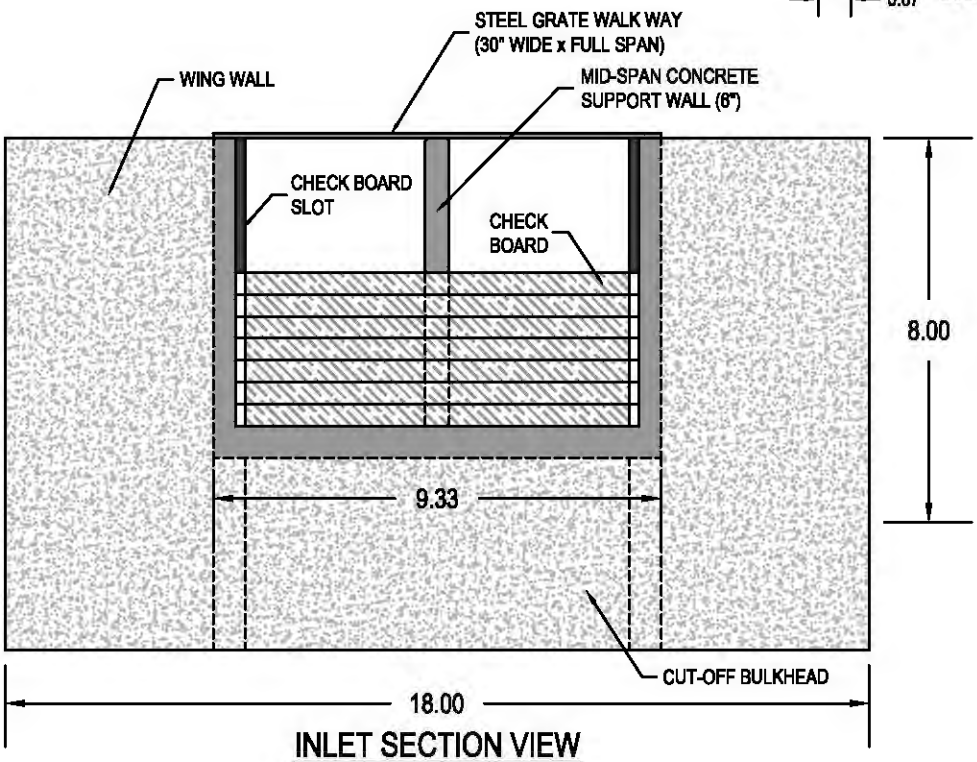

INLET SECTION VIEW

DESIGNED BY: MTJ	WWDC–NEW FORK RIVER WATERSHED MASTER PLAN–LEVEL I STUDY	RIO VERDE ENGINEERING	
DRAWN BY: MTJ	CORA VALLEY ANGUS (NEW FORK CHECK STRUCTURE REHAB) LOCATED IN SECTION 34, T.35N., R.110W., SUBLETTE COUNTY, WY	(307) 367-2826 FAX# (307)-367-2546	PINEDALE, WYOMING
CHECKED BY: MCE			
DATE: 7/13/17			
REV:			
JOB NO: 4183			
PAGE: 4 OF 4			

PROJECT STAKEHOLDER

FAYETTE RANCH

NEW FORK RIVER WATERSHED STUDY LEVEL I

Owner/Operator: Fayette Ranch
Project Type: Source Water Development
Project ID: 44
Project Name: Brosman No. 2 Stock Water Well Development
Location (PLSS): Sec. 18, T.34N., R.108W.
Location (Lat/Long): 42.91736°, 109.78641°

PROJECT COMPONENTS - ITEMIZED COSTS

ITEM No.	DESCRIPTION	QUANTITY	UNIT	UNIT COST	TOTAL COST
1	Mobilization	1	LS	$ 5,500.00	$ 5,500.00
2	Bonds	1	LS	$ 1,000.00	$ 1,000.00
2	Well Drilling	450	LF	$ 65.00	$ 29,250.00
3	Pump Test	1	LS	$ 3,900.00	$ 3,900.00
4	Submersible Pump & Equipment	1	LS	$ 3,800.00	$ 3,800.00
5	Solar Array (Complete)	1	LS	$ 6,800.00	$ 6,800.00
6	4-Rail Pole Fence	100	LF	$ 8.50	$ 850.00
7	2,000 Gal Tire Trough (Complete)	1	LS	$ 11,000.00	$ 11,000.00
8	1-1/4" SDR 11 Pipe	65	LF	$ 3.05	$ 198.25
9	4" SDR 11 Pipe	135	LF	$ 6.95	$ 938.25
				TOTAL COMPONENT COST (SUBTOTAL #2):	$ 63,236.50

PREPARATION OF FINAL DESIGNS & SPECIFICATIONS:	$ 1,200.00
PERMITTING AND MITIGATION:	$ 800.00
LEGAL FEES:	$ -
ACQUISTION OF ACCESS AND RIGHTS-OF-WAY:	$ -
PRE-CONSTRUCTION COSTS (**SUBTOTAL #1**):	$ 2,000.00
TOTAL COMPONENT COST **(SUBTOTAL #2**):	$ 63,236.50
CONSTRUCTION ENGINEERING COST (SUBTOTAL #2 x 10%):	$ 6,323.65
COMPONENTS AND ENGINEERING COSTS (**SUBTOTAL #3**):	$ 69,560.15
CONTINGENCY (SUBTOTAL #3 X 15%):	$ 10,434.02
TOTAL CONSTRUCTION COST (**SUBTOTAL #4**):	$ 79,994.17
TOTAL PROJECT COST (**SUBTOTAL #1 + SUBTOTAL #4**):	**$ 81,994.17**

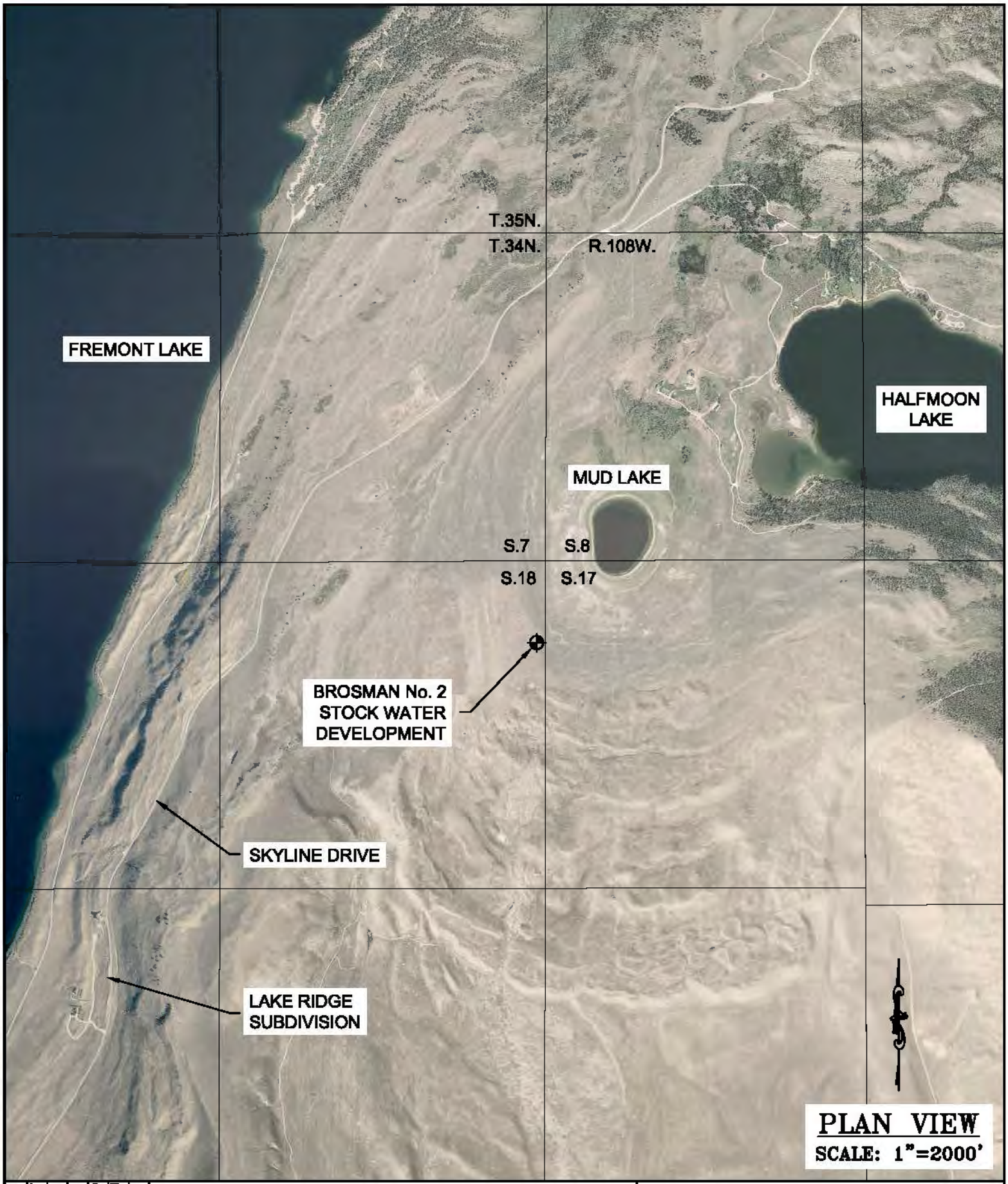

DESIGNED BY: MTJ	
DRAWN BY: MTJ	
CHECKED BY: MCE	
DATE: 7/10/17	
REV:	
JOB NO: 4183	
PAGE: 1 OF 2	

WWDC–NEW FORK RIVER WATERSHED
MASTER PLAN–LEVEL I STUDY
FAYETTE RANCH (BROSMAN No. 2 STOCK WATER DEV.)
LOCATED IN SECTION 18, T.34N., R.108W.,
SUBLETTE COUNTY, WY

RIO VERDE ENGINEERING
(307) 367-2826
FAX# (307)-367-2546
PINEDALE, WYOMING

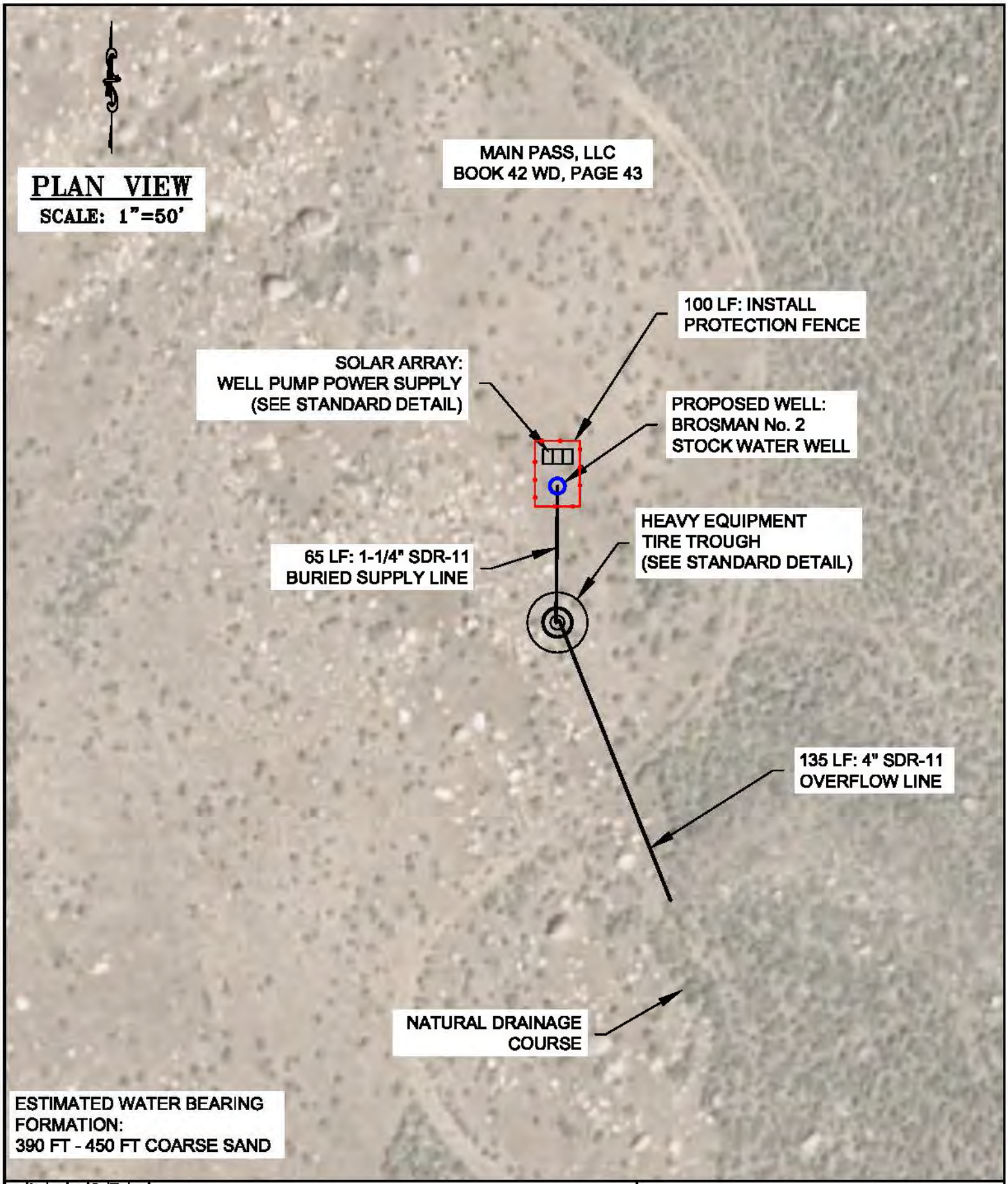

PAGE: 2 OF 2	JOB NO: 4183	REV:	DATE: 7/10/17	CHECKED BY: MCE	DRAWN BY: MTJ	DESIGNED BY: MTJ	**WWDC–NEW FORK RIVER WATERSHED MASTER PLAN–LEVEL I STUDY** FAYETTE RANCH (BROSMAN No. 2 STOCK WATER DEV.) LOCATED IN SECTION 18, T.34N., R.108W., SUBLETTE COUNTY, WY

RIO VERDE ENGINEERING
(307) 367-2826
FAX# (307)-367-2546
PINEDALE, WYOMING

DISCLAIMER:

FIELD VERIFICATION IS NEEDED REGARDING WATER ZONES, STATIC WATER LEVEL, WATER YIELD, & DRAW DOWN. ACTUAL WELL DEPTHS AND POWER REQUIREMENTS WILL VARY.

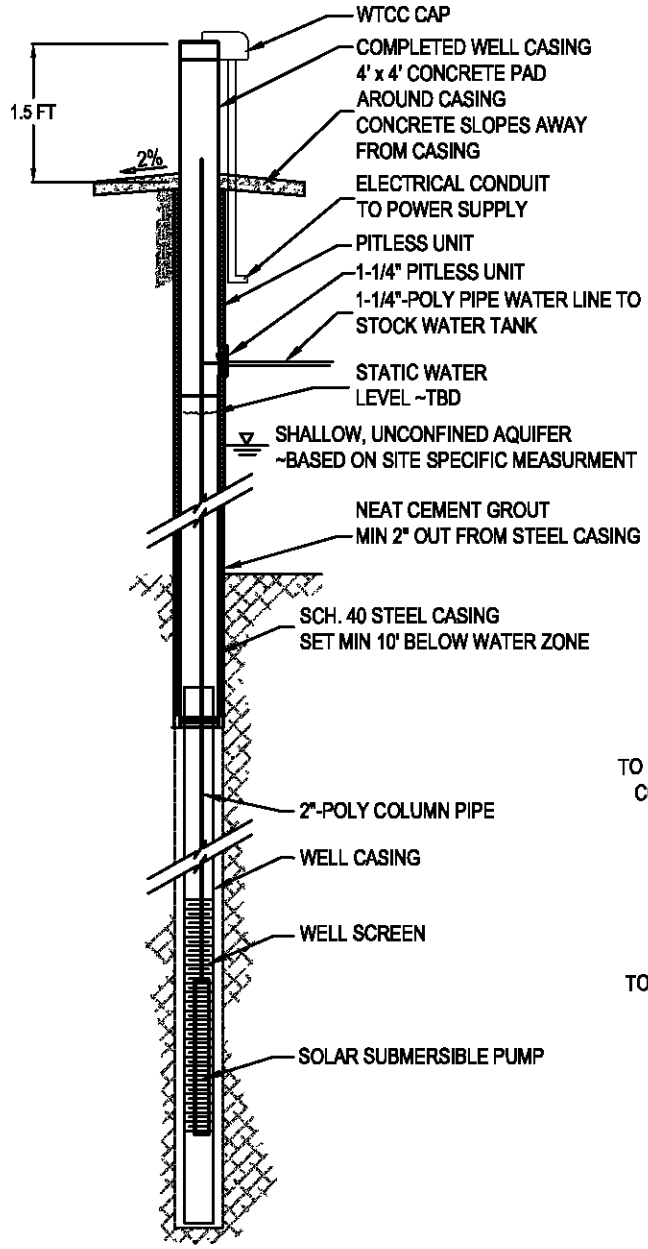

TYPICAL WELL

NOT TO SCALE

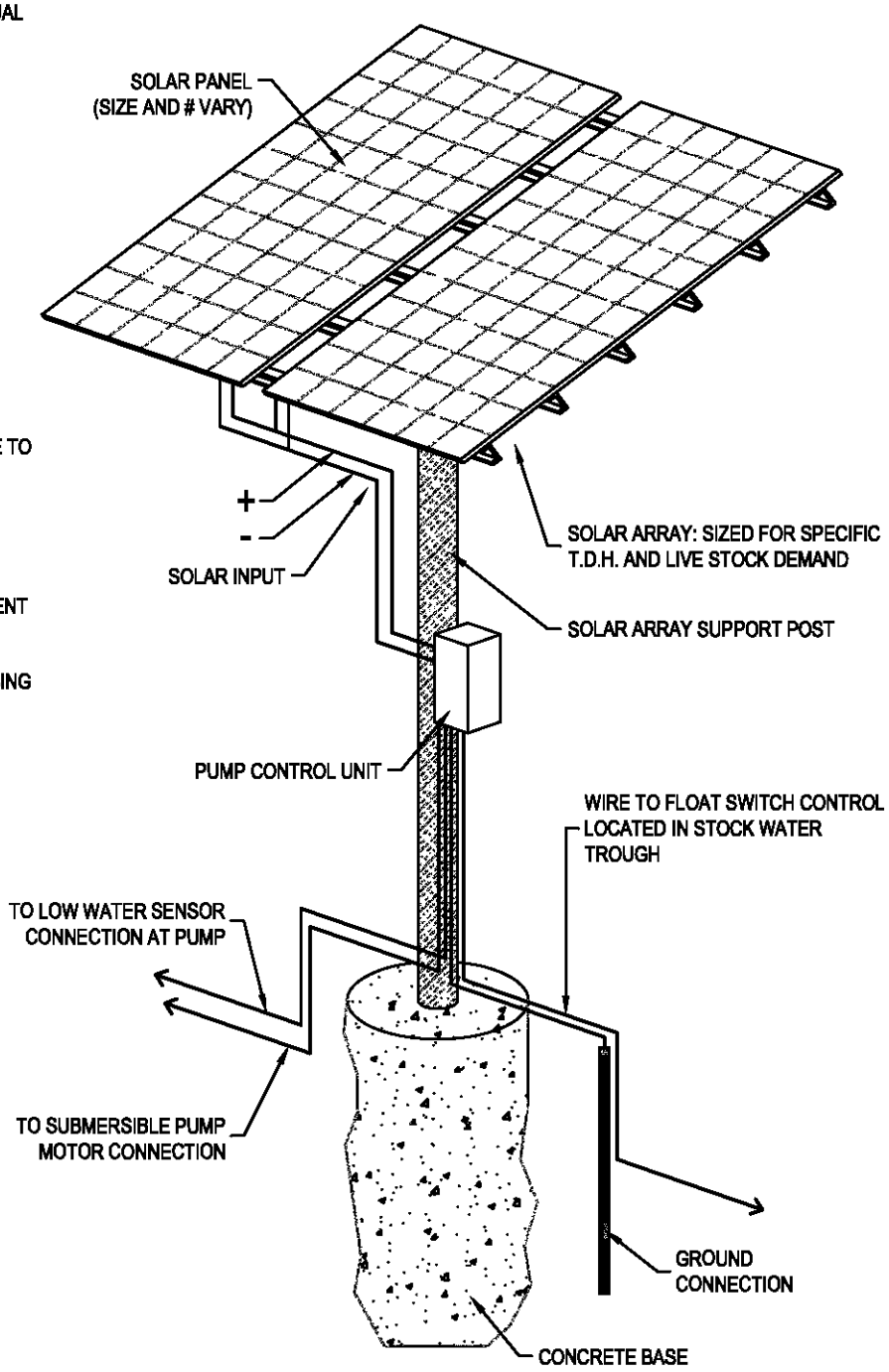

TYPICAL SOLAR ARRAY

NOT TO SCALE

DESIGNED BY:	
DRAWN BY: MTJ	
CHECKED BY: MCE	
DATE: 6/05/17	
REV:	
JOB NO: 4183	
PAGE: 1 OF 1	

STANDARD DETAIL
SOLAR POWERED STOCK WATERING SYSTEM

RIO VERDE ENGINEERING
(307) 367-2826
FAX# (307)-367-2546
PINEDALE, WYOMING

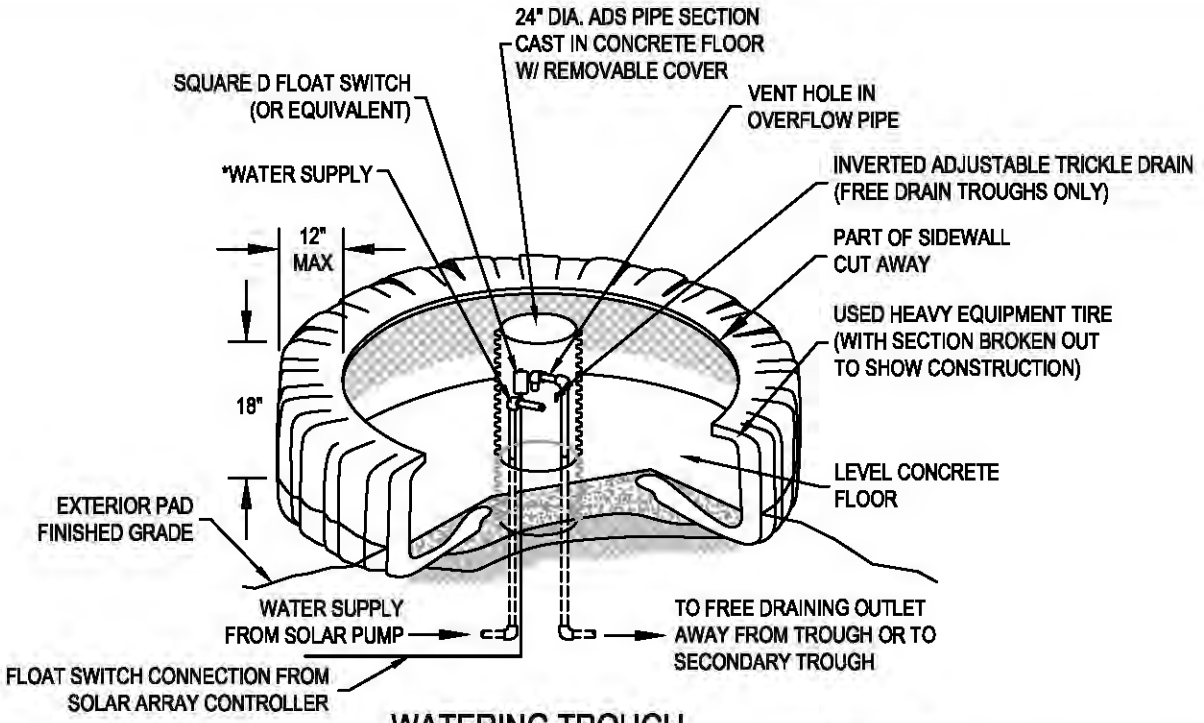

WATERING TROUGH
ISOMETRIC VIEW
N.T.S.

INFLOW PIPE DIA. - 1-1/2" (PRESSURE)

OVERFLOW PIPE DIA. - 4 IN.

CONCRETE SLAB THICKNESS - 6 IN.

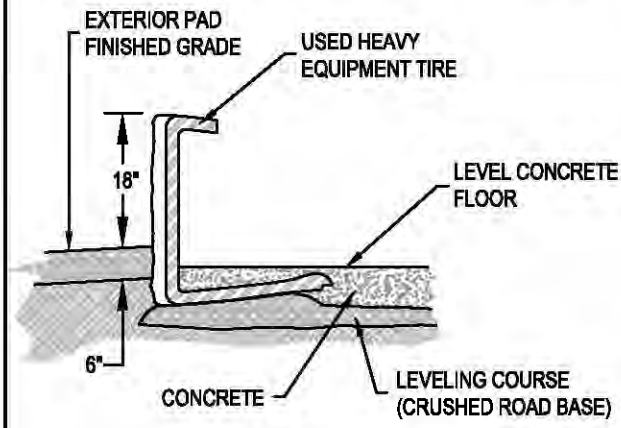

SECTION VIEW
N.T.S.

*TO REDUCE FREEZING, POINT THE INFLOW IN THE DIRECTION THAT WILL CAUSE THE MOST WATER MOVEMENT.

INSTALLATION NOTES

1.) CUT AWAY PART OF SIDEWALL. THIS WILL BE THE TOP OF THE TROUGH

2.) USE THE CRUSHED ROAD BASE TO FILL AROUND THE PIPES AND TO LEVEL THE TIRE.

3.) POUR CONCRETE AROUND ADS PIPE, WATER SUPPLY, OVERFLOW PIPES AND WORK UNDER INTERIOR EDGE OF TIRE. FINISH THE TOP SURFACE OF CONCRETE TO FORM A LEVEL PAD ACROSS THE TROUGH BOTTOM.

4.) PROVIDE AN ESCAPE DEVICE FOR SMALL BIRDS AND ANIMALS THAT MAY BECOME ENTRAPPED. A RAMP CONSTRUCTED OF A PIECE OF EXPANDED METAL EXTENDING FROM THE WATER SURFACE TO THE TOP SIDEWALL OR A FLOAT CONSISTING OF A PIECE OF LUMBER ARE TWO DEVICES THAT COULD BE USED.

5.) EXTEND CRUSHED ROAD BASE PAD 6 FT. OUT FROM EXTERIOR TIRE EDGE

*DESIGN BASED ON NRCS STANDARDIZED DRAWING AND DESIGN INPUT FROM BROGAN HYDROLOGIC CONSULTING. DESIGN MUST BE ADAPTED TO MEET SITE SPECIFIC CONDITIONS.

PAGE: 1 OF 1	
JOB NO: 4183	
REV:	
DATE: 4/21/17	
CHECKED BY: MCE	
DRAWN BY: MTJ	
DESIGNED BY:	

STANDARD DETAIL
HEAVY EQUIPMENT TIRE TROUGH

U.S.D.A. NATURAL RESOURCES CONSERVATION SERVICE

RIO VERDE ENGINEERING
(307) 367-2826
FAX (307)-367-2846 PINEDALE, WYOMING

PROJECT STAKEHOLDER

HEDRICK, KIRBY

NEW FORK RIVER WATERSHED STUDY LEVEL I

Owner/Operator: Hedrick, Kirby
Project Type: Source Water Development
Project ID: 5
Project Name: Hedrick Stock Water Development Project
Location (PLSS): Sec. 5, T.36N., R.110W.
Location (Lat/Long): 43.12099°, 110.01225°

PROJECT COMPONENTS - ITEMIZED COSTS

ITEM No.	DESCRIPTION	QUANTITY	UNIT	UNIT COST	TOTAL COST
1	Mobilization	1	LS	$ 2,200.00	$ 2,200.00
2	Bonds	1	LS	$ 500.00	$ 500.00
3	Well Drilling	200	LF	$ 65.00	$ 13,000.00
4	Solar Array (Complete)	1	LS	$ 4,600.00	$ 4,600.00
5	Submersible Pump & Equipment	1	LS	$ 2,200.00	$ 2,200.00
6	Pump Test	1	LS	$ 2,500.00	$ 2,500.00
7	4-Rail Pole Fence	100	LF	$ 8.50	$ 850.00
8	750 Gal. Trough (Complete)	1	LS	$ 2,200.00	$ 2,200.00
9	1-1/4" SDR 11 Pipe	105	LF	$ 3.05	$ 320.25
10	4" SDR 11 Pipe	130	LF	$ 6.95	$ 903.50
				TOTAL COMPONENT COST (SUBTOTAL #2):	$ 29,273.75

PREPARATION OF FINAL DESIGNS & SPECIFICATIONS:	$ 1,100.00
PERMITTING AND MITIGATION:	$ 800.00
LEGAL FEES:	$ -
ACQUISTION OF ACCESS AND RIGHTS-OF-WAY:	$ -
PRE-CONSTRUCTION COSTS (**SUBTOTAL #1**):	$ 1,900.00
TOTAL COMPONENT COST (**SUBTOTAL #2**):	$ 29,273.75
CONSTRUCTION ENGINEERING COST (SUBTOTAL #2 x 10%):	$ 2,927.38
COMPONENTS AND ENGINEERING COSTS (**SUBTOTAL #3**):	$ 32,201.13
CONTINGENCY (SUBTOTAL #3 X 15%):	$ 4,830.17
TOTAL CONSTRUCTION COST (**SUBTOTAL #4**):	$ 37,031.29
TOTAL PROJECT COST (**SUBTOTAL #1 + SUBTOTAL #4**):	**$ 38,931.29**

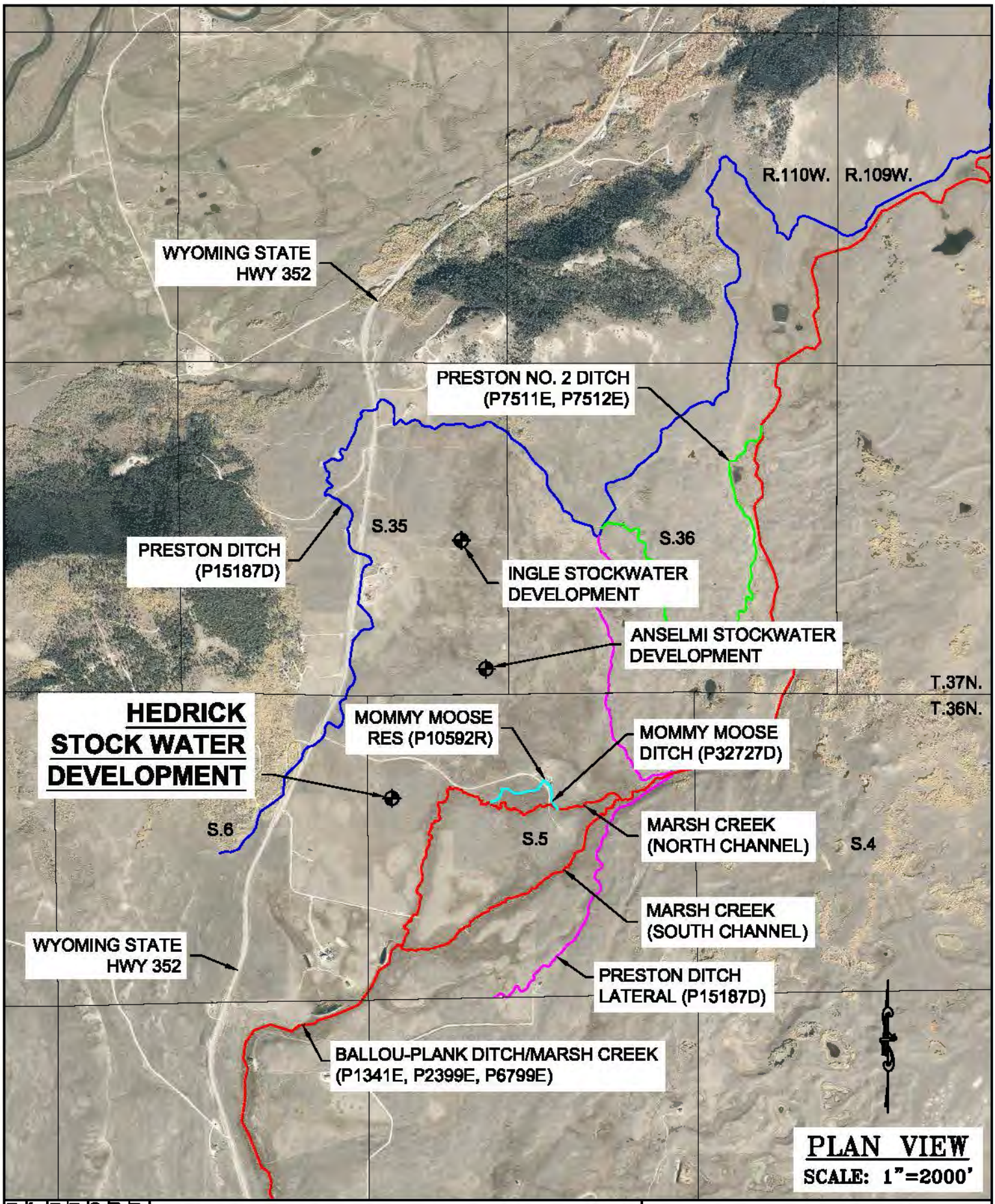

DESIGNED BY: MTJ
DRAWN BY: MTJ
CHECKED BY: MCE
DATE: 7/10/17
REV:
JOB NO: 4183
PAGE: 1 OF 2

WWDC–NEW FORK RIVER WATERSHED
MASTER PLAN–LEVEL I STUDY
KIRBY HEDRICK (STOCK WATER DEVELOPMENT)
LOCATED IN SECTION 5, T.36N., R.110W.,
SUBLETTE COUNTY, WY

RIO VERDE ENGINEERING
(307) 367-2826
FAX# (307)-367-2546
PINEDALE, WYOMING

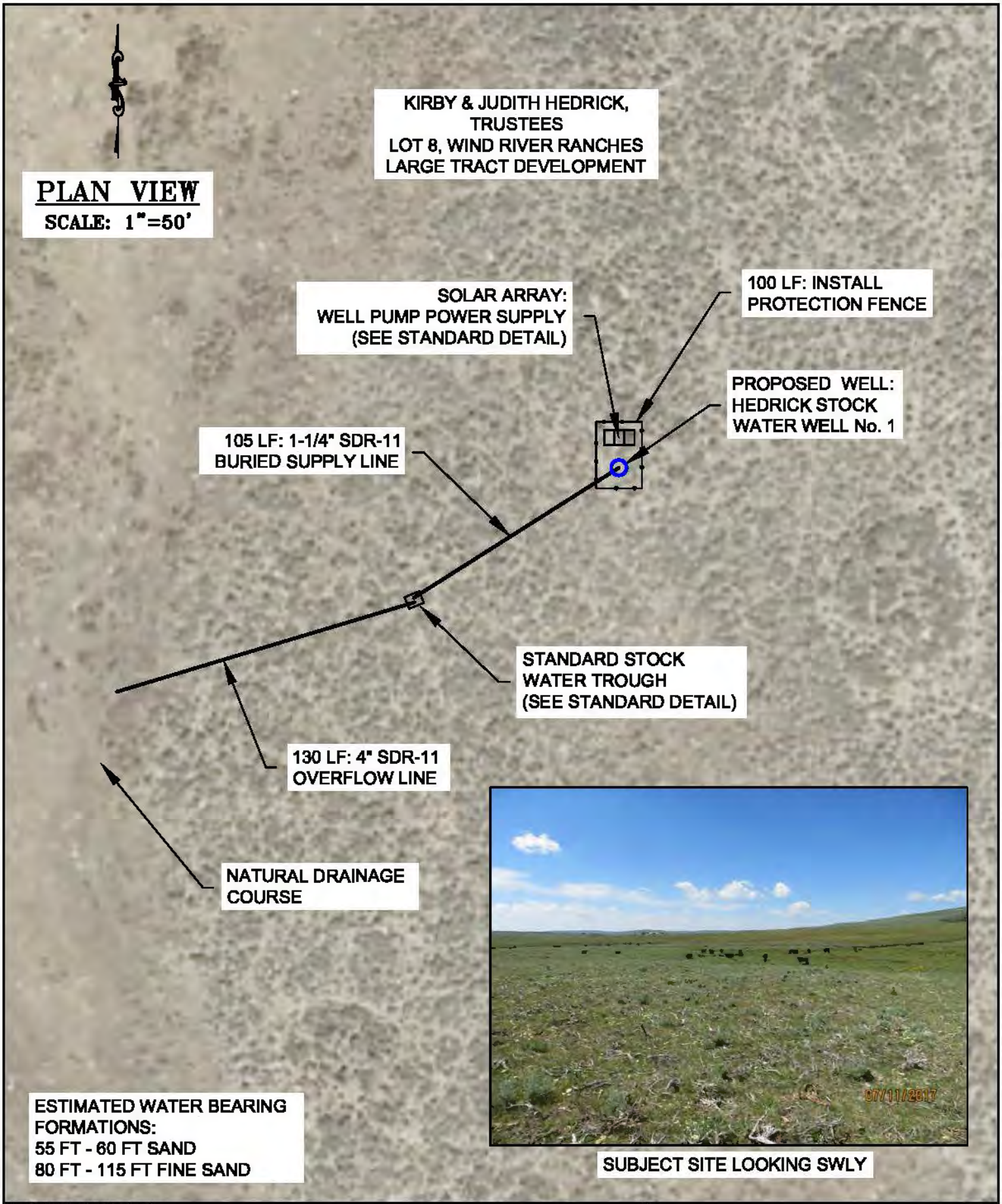

SUBJECT SITE LOOKING SWLY

DESIGNED BY: MTJ
DRAWN BY: MTJ
CHECKED BY: MCE
DATE: 7/10/17
REV:
JOB NO: 4183
PAGE: 2 OF 2

WWDC–NEW FORK RIVER WATERSHED
MASTER PLAN–LEVEL I STUDY
KIRBY HEDRICK (STOCK WATER DEVELOPMENT)
LOCATED IN SECTION 5, T.36N., R.110W.,
SUBLETTE COUNTY, WY

RIO VERDE ENGINEERING
(307) 367-2826
FAX# (307)-367-2546
PINEDALE, WYOMING

DISCLAIMER:

FIELD VERIFICATION IS NEEDED REGARDING WATER ZONES, STATIC WATER LEVEL, WATER YIELD, & DRAW DOWN. ACTUAL WELL DEPTHS AND POWER REQUIREMENTS WILL VARY.

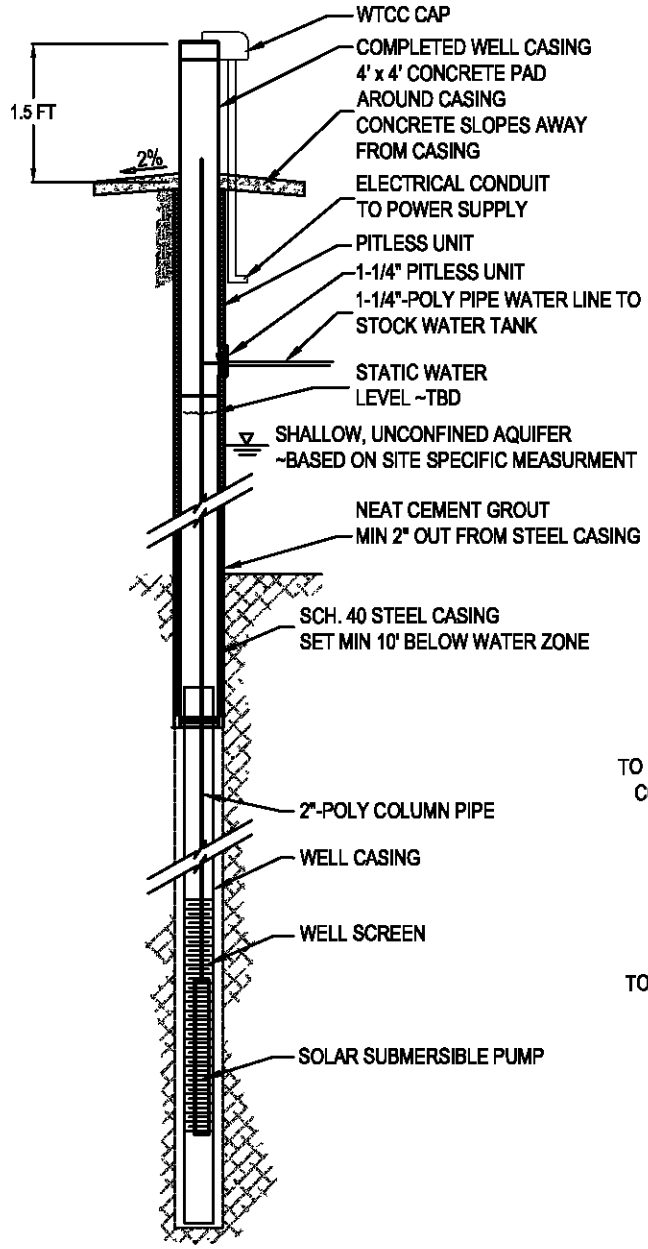

TYPICAL WELL

NOT TO SCALE

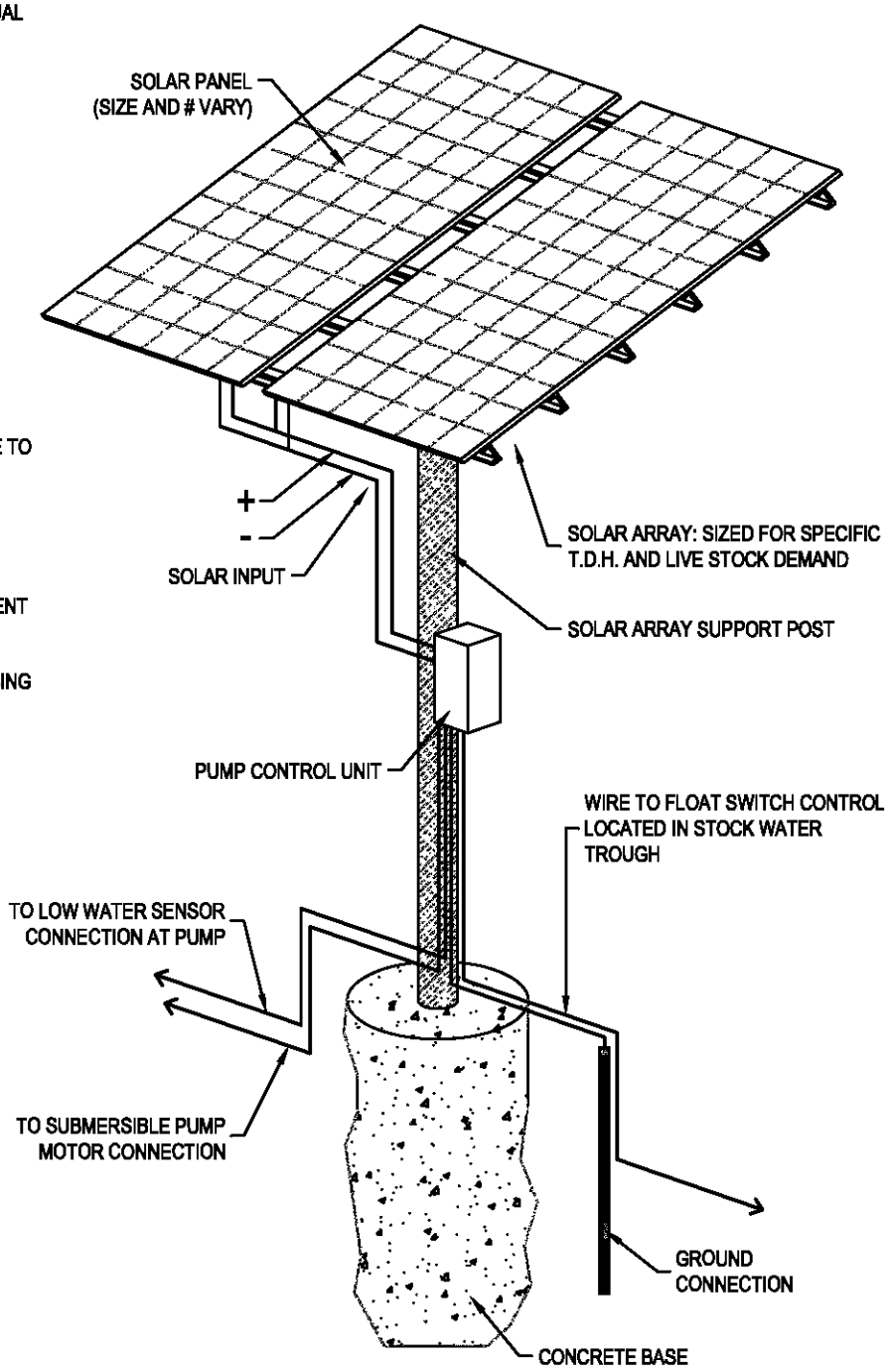

TYPICAL SOLAR ARRAY

NOT TO SCALE

DESIGNED BY:	
DRAWN BY: MTJ	
CHECKED BY: MCE	
DATE: 6/05/17	
REV:	
JOB NO: 4183	
PAGE: 1 OF 1	

STANDARD DETAIL
SOLAR POWERED STOCK WATERING SYSTEM

RIO VERDE ENGINEERING
(307) 367-2826
FAX# (307)-367-2546
PINEDALE, WYOMING

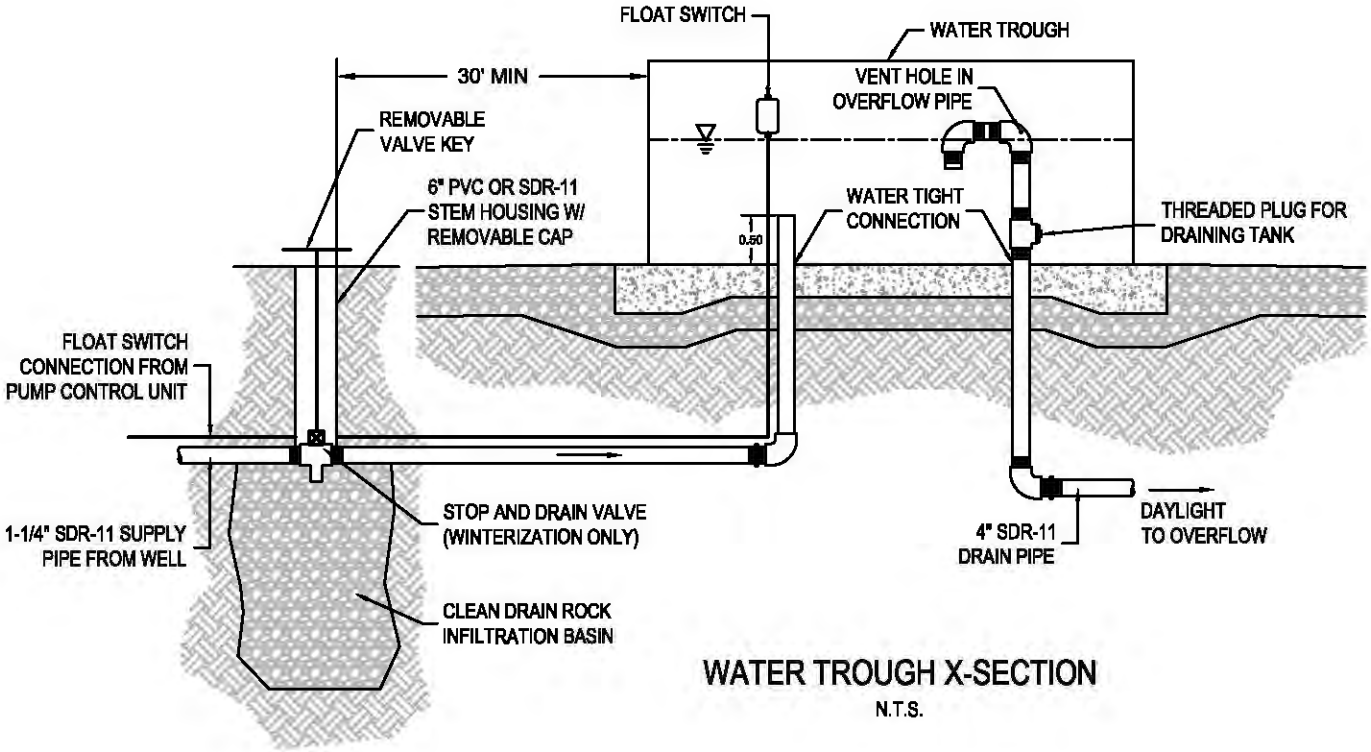

WATER TROUGH X-SECTION

N.T.S.

STANDARD DETAIL
STOCK WATER TROUGH
(RECTANGULAR)

RIO VERDE ENGINEERING
(307) 367-2826
FAX# (307)-367-2348
PINEDALE, WYOMING

DESIGNED BY:
DRAWN BY: MTJ
CHECKED BY: MCE
DATE: 4/21/17
REV:
JOB NO: 4183
PAGE: 1 OF 1

PROJECT STAKEHOLDER

HIGHLAND IRRIGATION DISTRICT

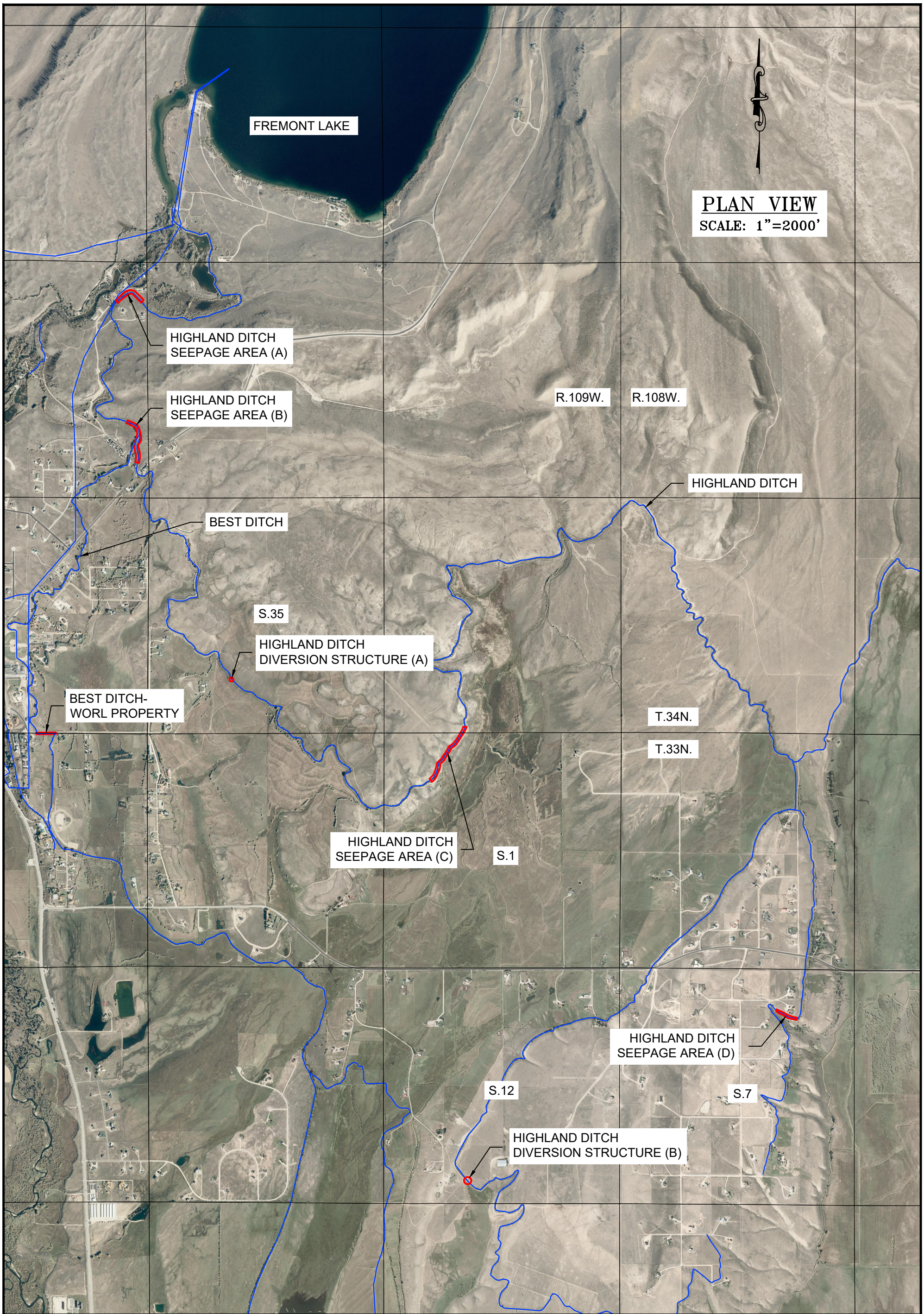

DESIGNED BY:
DRAWN BY: MTJ
CHECKED BY: MCE
DATE: 9/22/16
REV:
JOB NO: 4183
PAGE: 1 OF 1

WWDC–NEW FORK RIVER WATERSHED MASTER PLAN–LEVEL I STUDY

HIGHLAND IRRIGATION DISTRICT PROJECT VICINITY
LOCATED IN
SUBLETTE COUNTY, WYOMING

RIO VERDE ENGINEERING
(307) 367-2826
FAX# (307)-367-2546
PINEDALE, WYOMING

NEW FORK RIVER WATERSHED STUDY LEVEL I

Owner/Operator: Highland Irrigation District
Project Type: Irrigation
Project ID: 16
Project Name: Highland Ditch Seepage Area C
Location (PLSS): Sec. 1, T.33N., R.109W.
Location (Lat/Long): 42.86441°, 109.81841°

PROJECT COMPONENTS - ITEMIZED COSTS

ITEM No.	DESCRIPTION	QUANTITY	UNIT	UNIT COST	TOTAL COST
1	Mobilization	1	LS	$ 500.00	$ 500.00
2	Bonds	1	LS	$ 200.00	$ 200.00
3	Clearing & Grubbing	1000	SY	$ 2.20	$ 2,200.00
4	Misc. Excavation & Placement	950	CY	$ 4.00	$ 3,800.00
				TOTAL COMPONENT COST (SUBTOTAL #2):	$ 6,700.00

PREPARATION OF FINAL DESIGNS & SPECIFICATIONS:	$ 1,200.00
PERMITTING AND MITIGATION:	$ -
LEGAL FEES:	$ -
ACQUISTION OF ACCESS AND RIGHTS-OF-WAY:	$ 200.00
PRE-CONSTRUCTION COSTS (**SUBTOTAL #1**):	$ 1,400.00
TOTAL COMPONENT COST **(SUBTOTAL #2**):	$ 6,700.00
CONSTRUCTION ENGINEERING COST (SUBTOTAL #2 x 10%):	$ 670.00
COMPONENTS AND ENGINEERING COSTS (**SUBTOTAL #3**):	$ 7,370.00
CONTINGENCY (SUBTOTAL #3 X 15%):	$ 1,105.50
TOTAL CONSTRUCTION COST (**SUBTOTAL #4**):	$ 8,475.50
TOTAL PROJECT COST (**SUBTOTAL #1 + SUBTOTAL #4**):	**$ 9,875.50**

SEEPAGE AREA C

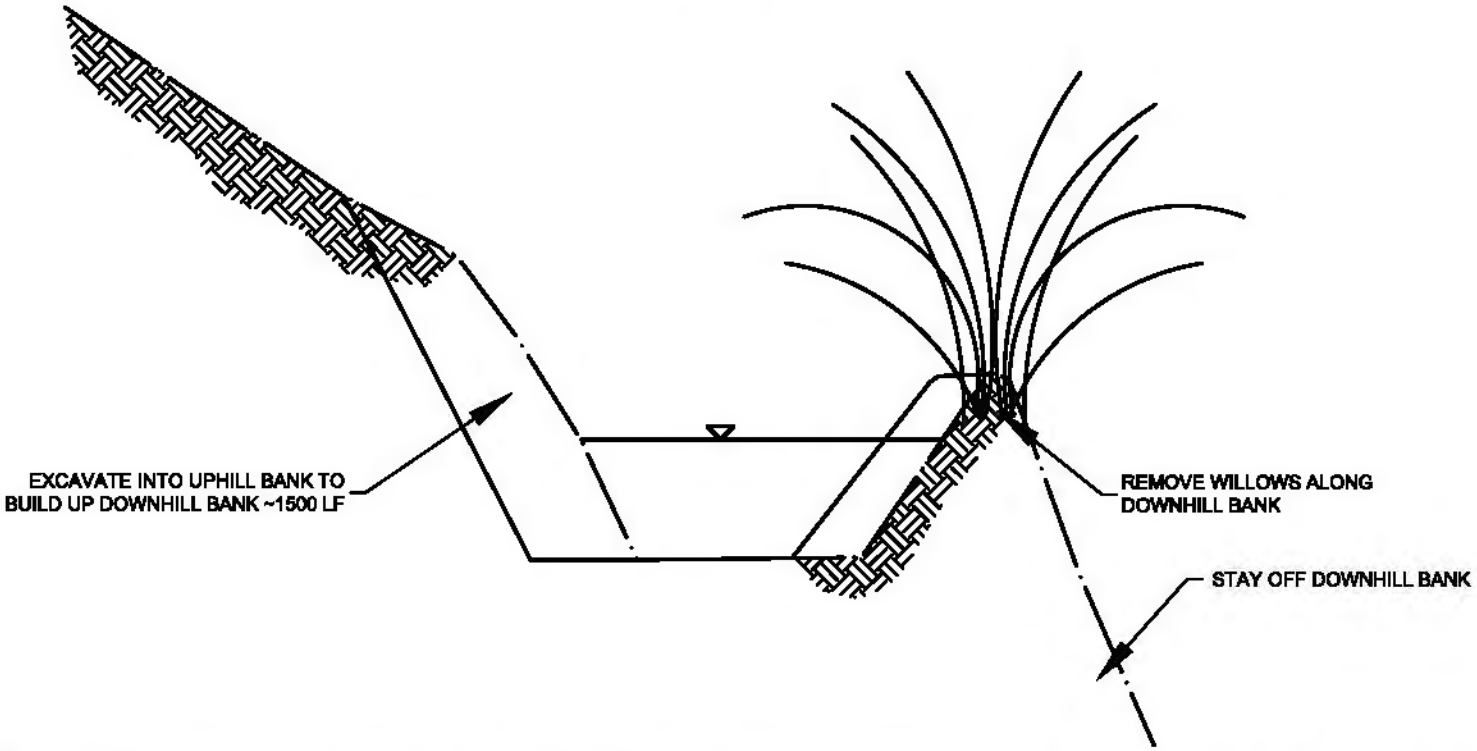

DESIGNED BY: MTJ
DRAWN BY: EAS
CHECKED BY: MCE
DATE: 5/22/17
REV:
JOB NO: 4183
PAGE: 1 OF 1

WWDC–NEW FORK RIVER WATERSHED
MASTER PLAN–LEVEL I STUDY
HIGHLAND IRRIGATION DISTRICT (SEEPAGE AREA "C")
LOCATED IN SECTION 1, T.33N., R.109W.,
SUBLETTE COUNTY, WY

RIO VERDE ENGINEERING
(307) 367-2828
FAX# (307)-367-2546
PINEDALE, WYOMING

NEW FORK RIVER WATERSHED STUDY LEVEL I

Owner/Operator: Highland Irrigation District
Project Type: Irrigation
Project ID: 17
Project Name: Highland Ditch Seepage Area D
Location (PLSS): Sec. 7, T.33N., R.108W.
Location (Lat/Long): 42.84889°, 109.78974°

PROJECT COMPONENTS - ITEMIZED COSTS

ITEM No.	DESCRIPTION	QUANTITY	UNIT	UNIT COST	TOTAL COST
1	Mobilization	1	LS	$ 550.00	$ 550.00
2	Bonds	1	LS	$ 200.00	$ 200.00
3	Clearing & Grubbing	420	SY	$ 2.20	$ 924.00
4	Misc. Excavation & Placement	110	CY	$ 5.50	$ 605.00
5	Imported Clay Liner Material	120	CY	$ 38.00	$ 4,560.00
				TOTAL COMPONENT COST (SUBTOTAL #2):	$ 6,839.00

PREPARATION OF FINAL DESIGNS & SPECIFICATIONS:	$ 800.00
PERMITTING AND MITIGATION:	$ -
LEGAL FEES:	$ -
ACQUISTION OF ACCESS AND RIGHTS-OF-WAY:	$ 200.00
PRE-CONSTRUCTION COSTS (**SUBTOTAL #1**):	$ 1,000.00
TOTAL COMPONENT COST **(SUBTOTAL #2**):	$ 6,839.00
CONSTRUCTION ENGINEERING COST (SUBTOTAL #2 x 10%):	$ 683.90
COMPONENTS AND ENGINEERING COSTS (**SUBTOTAL #3**):	$ 7,522.90
CONTINGENCY (SUBTOTAL #3 X 15%):	$ 1,128.44
TOTAL CONSTRUCTION COST (**SUBTOTAL #4**):	$ 8,651.34
TOTAL PROJECT COST (**SUBTOTAL #1 + SUBTOTAL #4**):	**$ 9,651.34**

SEEPAGE AREA D

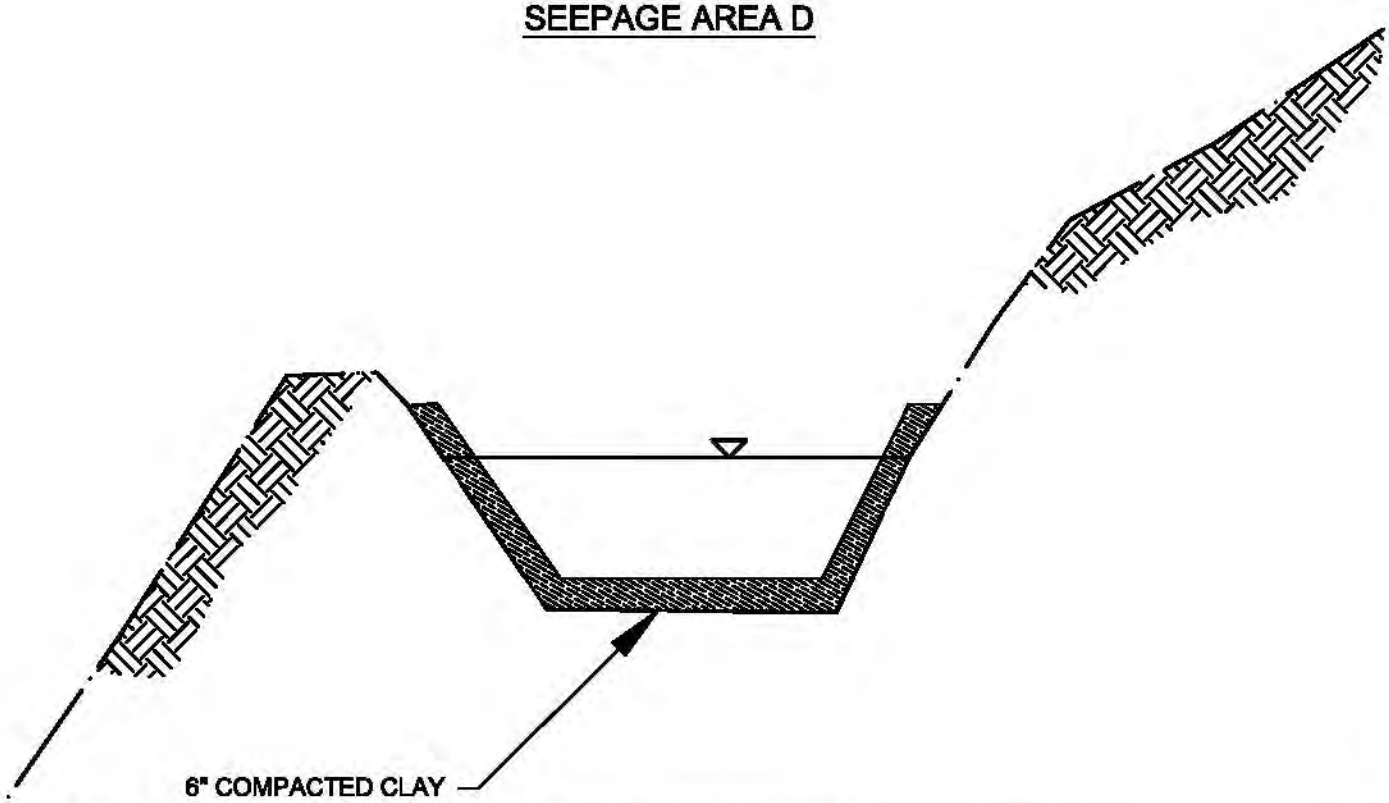

PAGE: 1 OF 1	JOB NO: 4183	REV:	DATE: 8/14/17	CHECKED BY: MCE	DRAWN BY: EAS	DESIGNED BY: MTJ

WWDC–NEW FORK RIVER WATERSHED
MASTER PLAN–LEVEL I STUDY
HIGHLAND IRRIGATION DISTRICT (SEEPAGE AREA "D")
LOCATED IN SECTION 7, T.33N., R.108W.,
SUBLETTE COUNTY, WY

RIO VERDE ENGINEERING
(307) 367-2826
FAX# (307)-367-2546
PINEDALE, WYOMING

NEW FORK RIVER WATERSHED STUDY LEVEL I

Owner/Operator: Highland Irrigation District
Project Type: Irrigation
Project ID: 18
Project Name: Highland Ditch Diversion Structure A
Location (PLSS): Sec. 35, T.34N., R.109W.
Location (Lat/Long): 42.87008°, 109.83502°

PROJECT COMPONENTS - ITEMIZED COSTS

ITEM No.	DESCRIPTION	QUANTITY	UNIT	UNIT COST	TOTAL COST
1	Mobilization	1	LS	$ 200.00	$ 200.00
2	Bonds	1	LS	$ 100.00	$ 100.00
3	Misc. Excavation & Placement	10	CY	$ 8.00	$ 80.00
4	Remove & Haul Off Existing CMP	1	LS	$ 350.00	$ 350.00
5	24" ADS N-12 Pipe	20	LF	$ 52.00	$ 1,040.00
6	Re-install Existing Slide Gate	1	LS	$ 580.00	$ 580.00
				TOTAL COMPONENT COST (SUBTOTAL #2):	$ 2,350.00

PREPARATION OF FINAL DESIGNS & SPECIFICATIONS:	$ 300.00
PERMITTING AND MITIGATION:	$ -
LEGAL FEES:	$ -
ACQUISTION OF ACCESS AND RIGHTS-OF-WAY:	$ 200.00
PRE-CONSTRUCTION COSTS (**SUBTOTAL #1**):	$ 500.00
TOTAL COMPONENT COST **(SUBTOTAL #2**):	$ 2,350.00
CONSTRUCTION ENGINEERING COST (SUBTOTAL #2 x 10%):	$ 235.00
COMPONENTS AND ENGINEERING COSTS (**SUBTOTAL #3**):	$ 2,585.00
CONTINGENCY (SUBTOTAL #3 X 15%):	$ 387.75
TOTAL CONSTRUCTION COST (**SUBTOTAL #4**):	$ 2,972.75
TOTAL PROJECT COST (**SUBTOTAL #1 + SUBTOTAL #4**):	**$ 3,472.75**

CHECK STRUCTURE A

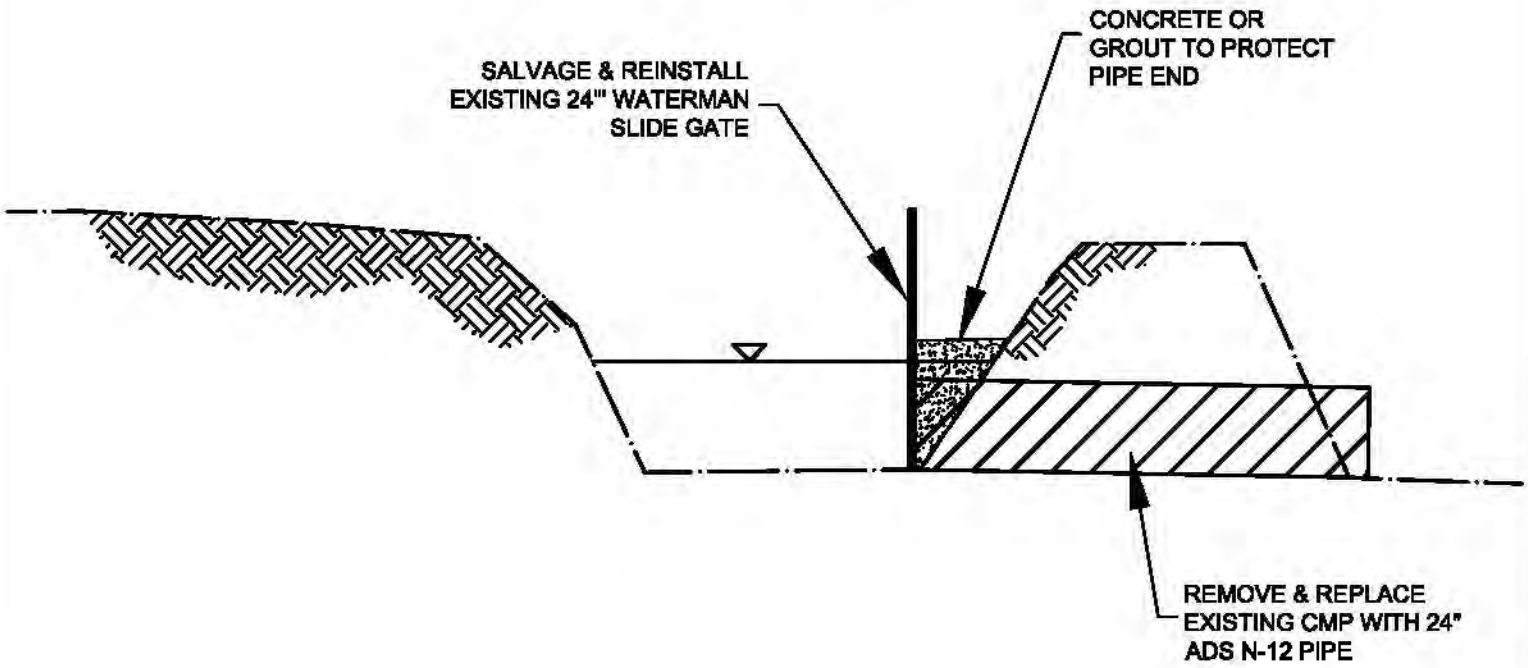

DESIGNED BY: MTJ	**WWDC–NEW FORK RIVER WATERSHED**
DRAWN BY: EAS	**MASTER PLAN–LEVEL I STUDY**
CHECKED BY: MCE	HIGHLAND IRRIGATION DISTRICT (DIV. STRUCTURE "A")
DATE: 8/14/17	LOCATED IN SECTION 35, T.34N., R.109W.,
REV:	SUBLETTE COUNTY, WY
JOB NO: 4183	
PAGE: 1 OF 1	

RIO VERDE ENGINEERING
(307) 367-2828
FAX# (307)-367-2546
PINEDALE, WYOMING

NEW FORK RIVER WATERSHED STUDY LEVEL I

Owner/Operator: Highland Irrigation District
Project Type: Irrigation
Project ID: 19
Project Name: Highland Ditch Diversion Structure B
Location (PLSS): Sec. 12, T.33N., R.109W.
Location (Lat/Long): 42.83884°, 109.81538°

PROJECT COMPONENTS - ITEMIZED COSTS

ITEM No.	DESCRIPTION	QUANTITY	UNIT	UNIT COST	TOTAL COST
1	Mobilization	1	LS	$ 200.00	$ 200.00
2	Bonds	1	LS	$ 100.00	$ 100.00
3	Misc. Excavation & Placement	10	CY	$ 8.00	$ 80.00
4	Remove & Haul Off Existing CMP	1	LS	$ 350.00	$ 350.00
5	24" ADS N-12 Pipe	20	LF	$ 52.00	$ 1,040.00
6	Re-install Existing Slide Gate	1	LS	$ 580.00	$ 580.00
				TOTAL COMPONENT COST (SUBTOTAL #2):	$ 2,350.00

PREPARATION OF FINAL DESIGNS & SPECIFICATIONS:	$ 300.00
PERMITTING AND MITIGATION:	$ -
LEGAL FEES:	$ -
ACQUISTION OF ACCESS AND RIGHTS-OF-WAY:	$ 200.00
PRE-CONSTRUCTION COSTS (**SUBTOTAL #1**):	$ 500.00
TOTAL COMPONENT COST **(SUBTOTAL #2**):	$ 2,350.00
CONSTRUCTION ENGINEERING COST (SUBTOTAL #2 x 10%):	$ 235.00
COMPONENTS AND ENGINEERING COSTS (**SUBTOTAL #3**):	$ 2,585.00
CONTINGENCY (SUBTOTAL #3 X 15%):	$ 387.75
TOTAL CONSTRUCTION COST (**SUBTOTAL #4**):	$ 2,972.75
TOTAL PROJECT COST (**SUBTOTAL #1 + SUBTOTAL #4**):	**$ 3,472.75**

DIVERSION STRUCTURE B

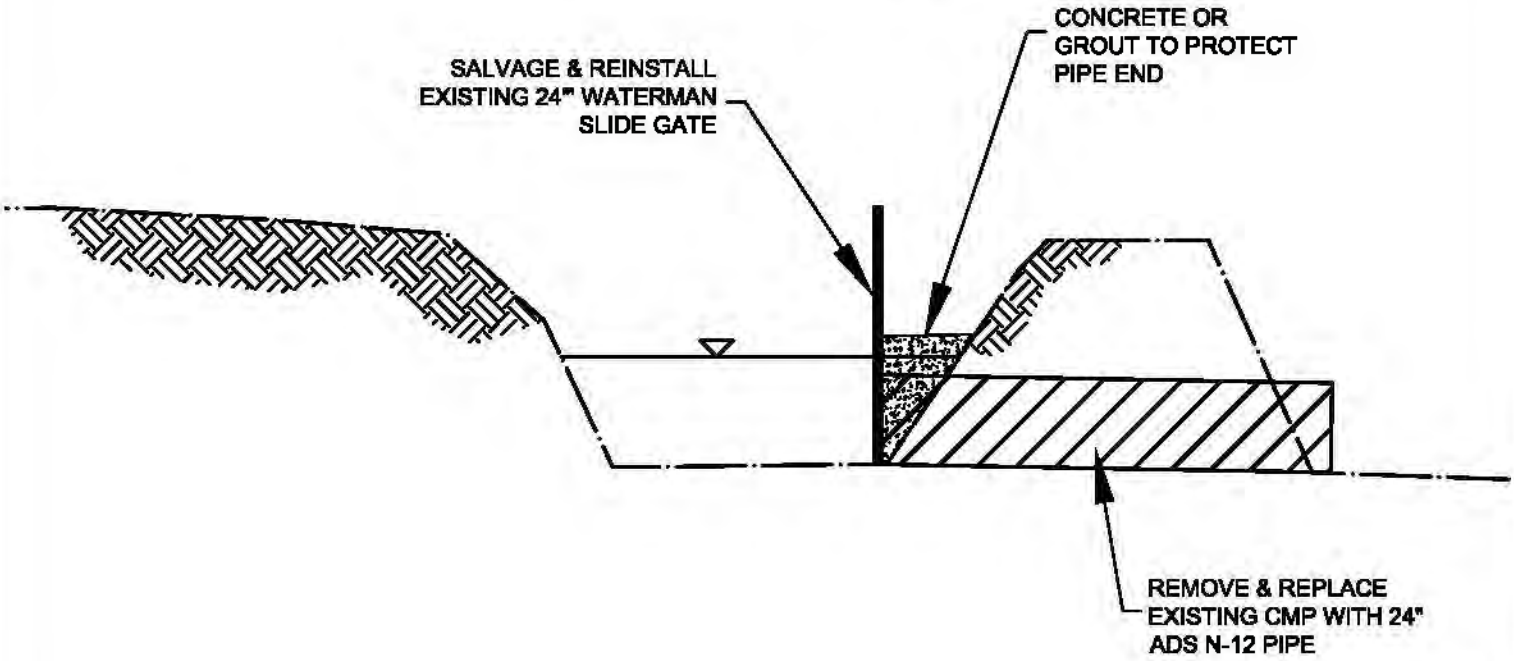

DESIGNED BY: MTJ	**WWDC–NEW FORK RIVER WATERSHED MASTER PLAN–LEVEL I STUDY**	RIO VERDE ENGINEERING
DRAWN BY: EAS	HIGHLAND IRRIGATION DISTRICT (DIV. STRUCTURE "B")	(307) 367-2826
CHECKED BY: MCE	LOCATED IN SECTION 12, T.33N., R.109W.,	FAX# (307)-367-2546 PINEDALE, WYOMING
DATE: 8/14/17	SUBLETTE COUNTY, WY	
REV:		
JOB NO: 4183		
PAGE: 1 OF 1		

PROJECT STAKEHOLDER

INGLE, NIC

NEW FORK RIVER WATERSHED STUDY LEVEL I

Owner/Operator: Ingle, Nic
Project Type: Source Water Development
Project ID: 4
Project Name: Ingle Stock Water Development Project
Location (PLSS): Sec. 35, T.37N., R.110W.
Location (Lat/Long): 43.13219°, 110.01546°

PROJECT COMPONENTS - ITEMIZED COSTS

ITEM No.	DESCRIPTION	QUANTITY	UNIT	UNIT COST	TOTAL COST
1	Mobilization	1	LS	$ 900.00	$ 900.00
2	Bonds	1	LS	$ 300.00	$ 300.00
3	Shallow Well Excavation	35	CY	$ 11.00	$ 385.00
4	Solar Array (Complete)	1	LS	$ 2,400.00	$ 2,400.00
5	Submersible Pump & Equipment	1	LS	$ 1,300.00	$ 1,300.00
6	Pump Test	1	LS	$ 1,500.00	$ 1,500.00
7	36" Dia. ADS Perf. Pipe w/ Cap	20	LF	$ 68.00	$ 1,360.00
8	2" Dia. Clean Rock	18	CY	$ 15.00	$ 270.00
9	750 Gal. Trough (Complete)	1	LS	$ 2,200.00	$ 2,200.00
10	1-1/4" SDR 11 Pipe	60	LF	$ 3.05	$ 183.00
11	4" SDR 11 Pipe	125	LF	$ 6.95	$ 868.75
12	4-Rail Pole Fence	100	LF	$ 8.50	$ 850.00
				TOTAL COMPONENT COST (SUBTOTAL #2):	$ 12,516.75

PREPARATION OF FINAL DESIGNS & SPECIFICATIONS:	$ 1,100.00
PERMITTING AND MITIGATION:	$ 800.00
LEGAL FEES:	$ -
ACQUISTION OF ACCESS AND RIGHTS-OF-WAY:	$ -
PRE-CONSTRUCTION COSTS (**SUBTOTAL #1**):	$ 1,900.00
TOTAL COMPONENT COST (**SUBTOTAL #2**):	$ 12,516.75
CONSTRUCTION ENGINEERING COST (SUBTOTAL #2 x 10%):	$ 1,251.68
COMPONENTS AND ENGINEERING COSTS (**SUBTOTAL #3**):	$ 13,768.43
CONTINGENCY (SUBTOTAL #3 X 15%):	$ 2,065.26
TOTAL CONSTRUCTION COST (**SUBTOTAL #4**):	$ 15,833.69
TOTAL PROJECT COST (**SUBTOTAL #1 + SUBTOTAL #4**):	**$ 17,733.69**

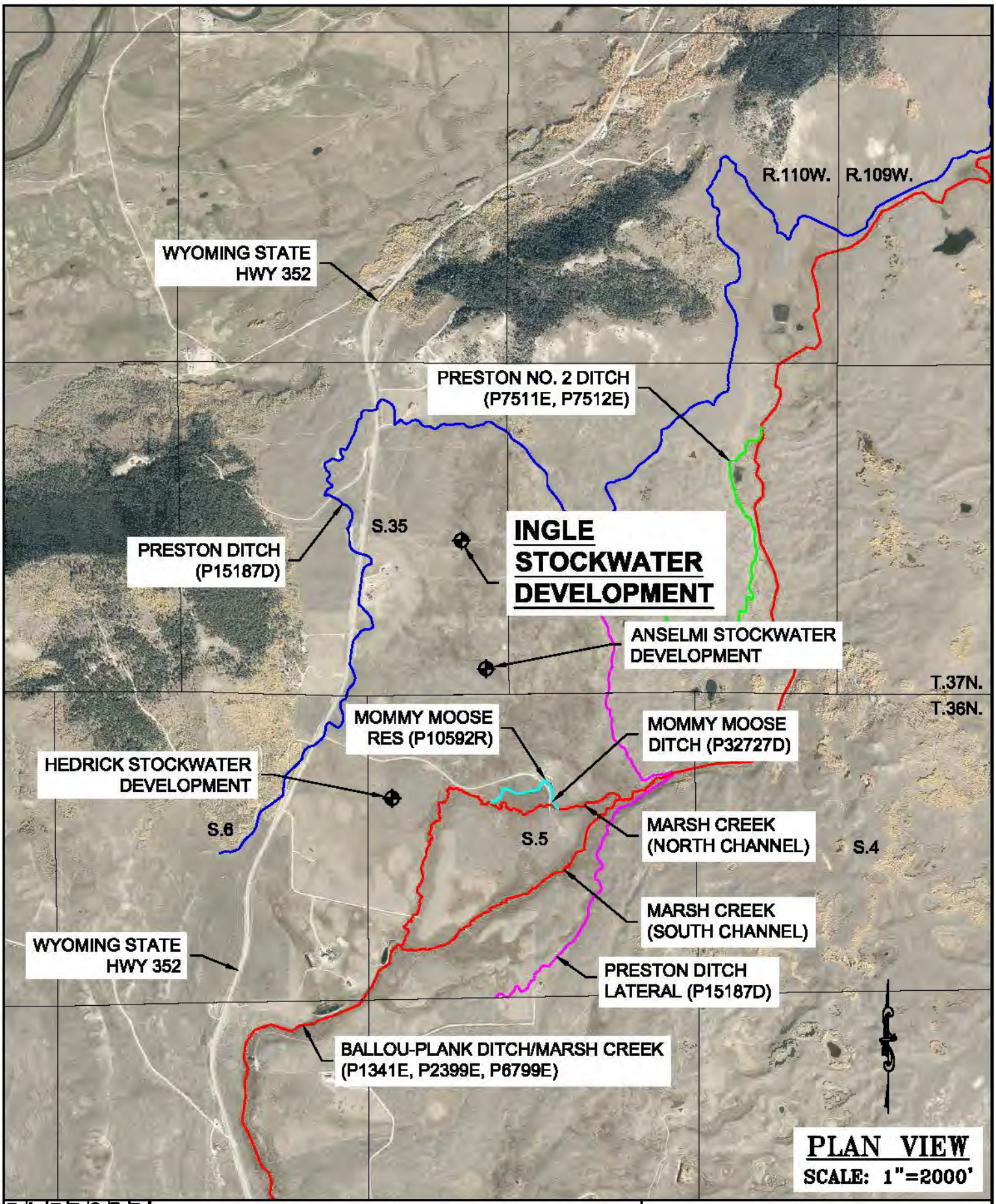

DESIGNED BY: MTJ	**WWDC–NEW FORK RIVER WATERSHED MASTER PLAN–LEVEL I STUDY**
DRAWN BY: MTJ	NIC INGLE (STOCK WATER DEVELOPMENT)
CHECKED BY: MCE	LOCATED IN SECTION 35, T.37N., R.110W.,
DATE: 7/10/17	SUBLETTE COUNTY, WY
REV:	
JOB NO: 4183	
PAGE: 1 OF 2	

RIO VERDE ENGINEERING
(307) 367-2828
FAX# (307)-367-2546
PINEDALE, WYOMING

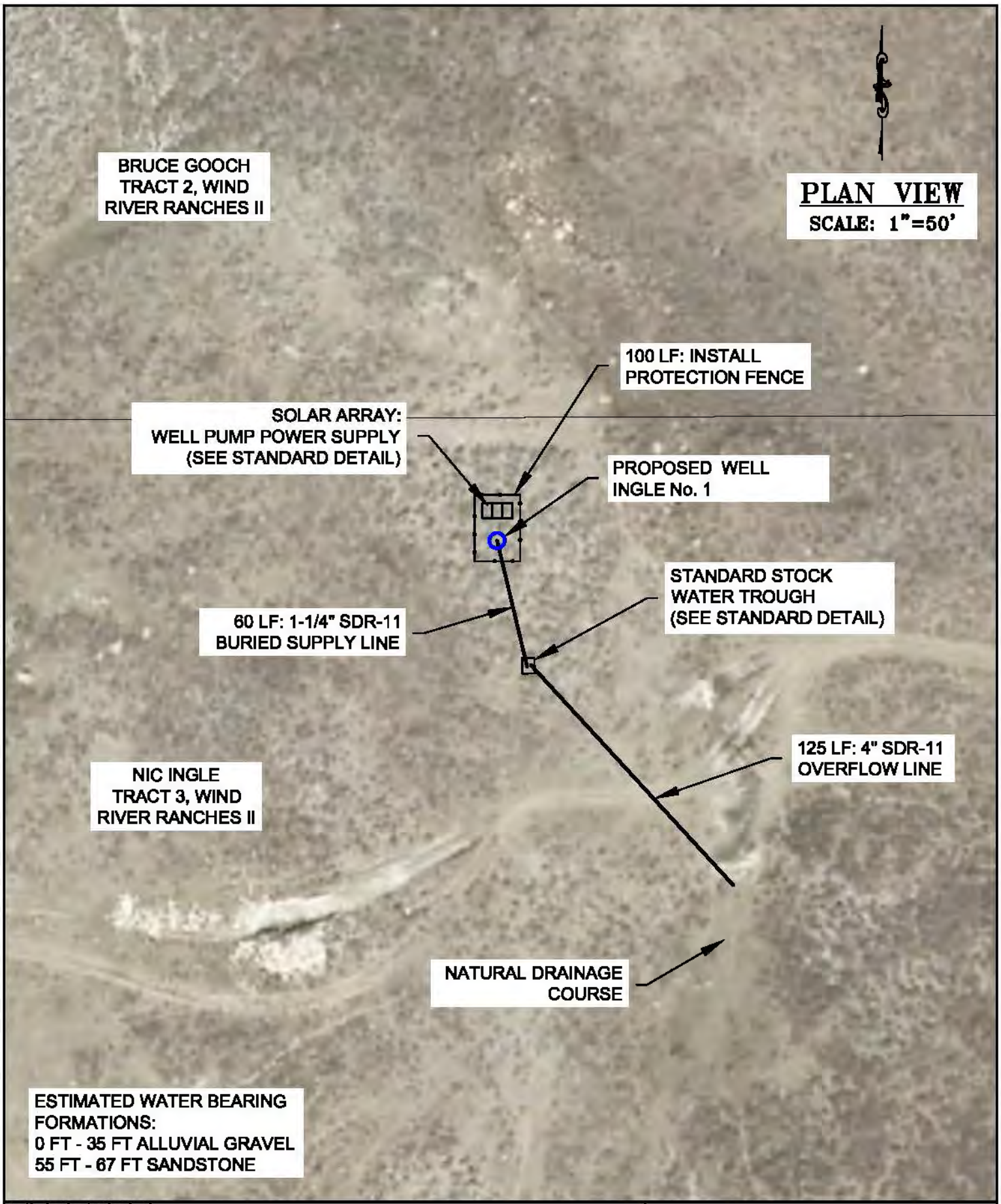

DESIGNED BY: MTJ
DRAWN BY: MTJ
CHECKED BY: MCE
DATE: 7/10/17
REV:
JOB NO: 4183
PAGE: 2 OF 2

WWDC–NEW FORK RIVER WATERSHED
MASTER PLAN–LEVEL I STUDY
NIC INGLE (STOCK WATER DEVELOPMENT)
LOCATED IN SECTION 35, T.37N., R.110W.,
SUBLETTE COUNTY, WY

RIO VERDE ENGINEERING
(307) 367-2828
FAX# (307)-367-2546
PINEDALE, WYOMING

DISCLAIMER:

FIELD VERIFICATION IS NEEDED REGARDING WATER ZONES, STATIC WATER LEVEL, WATER YIELD, & DRAW DOWN. ACTUAL WELL DEPTHS AND POWER REQUIREMENTS WILL VARY.

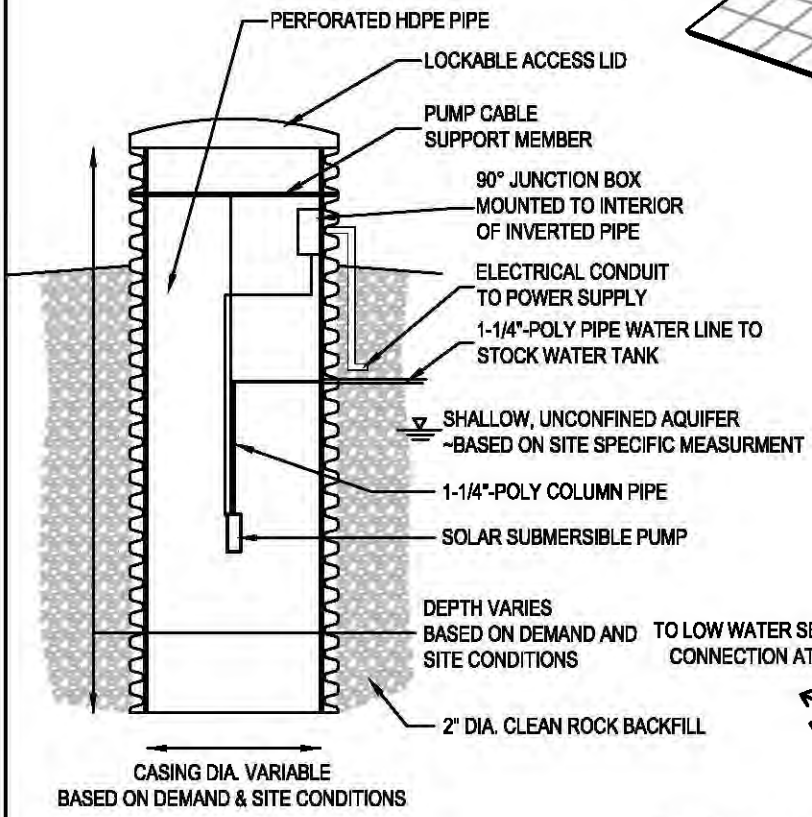

TYPICAL SHALLOW WELL

NOT TO SCALE

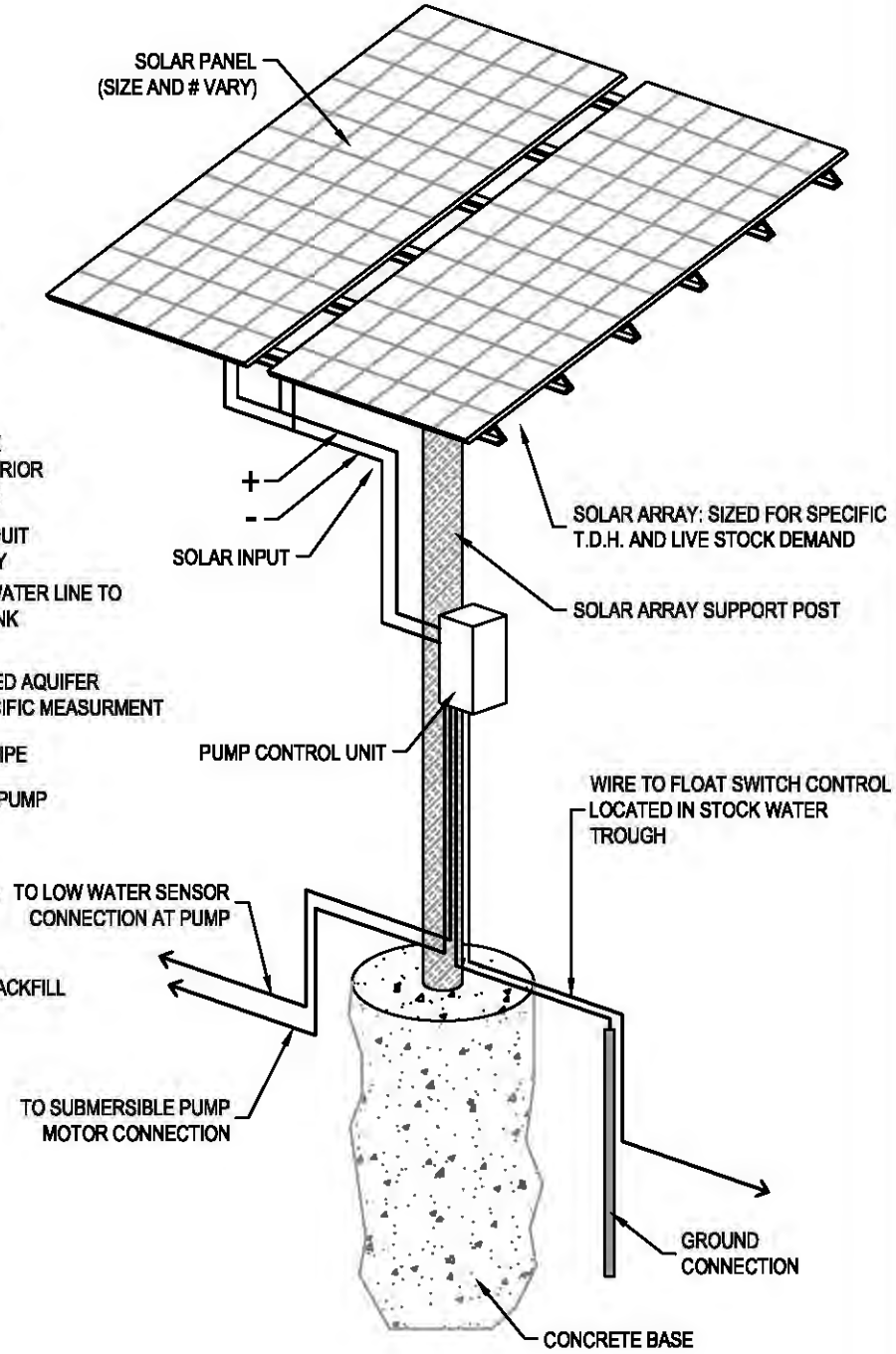

TYPICAL SOLAR ARRAY

NOT TO SCALE

DESIGNED BY:	STANDARD DETAIL	RIO VERDE ENGINEERING
DRAWN BY: MTJ	SHALLOW WELL – SOLAR POWERED STOCK WATERING SYSTEM	(307) 367-2828 FAX# (307)-367-2546 PINEDALE, WYOMING
CHECKED BY: MCE		
DATE: 6/05/17		
REV:		
JOB NO: 4183		
PAGE: 1 OF 1		

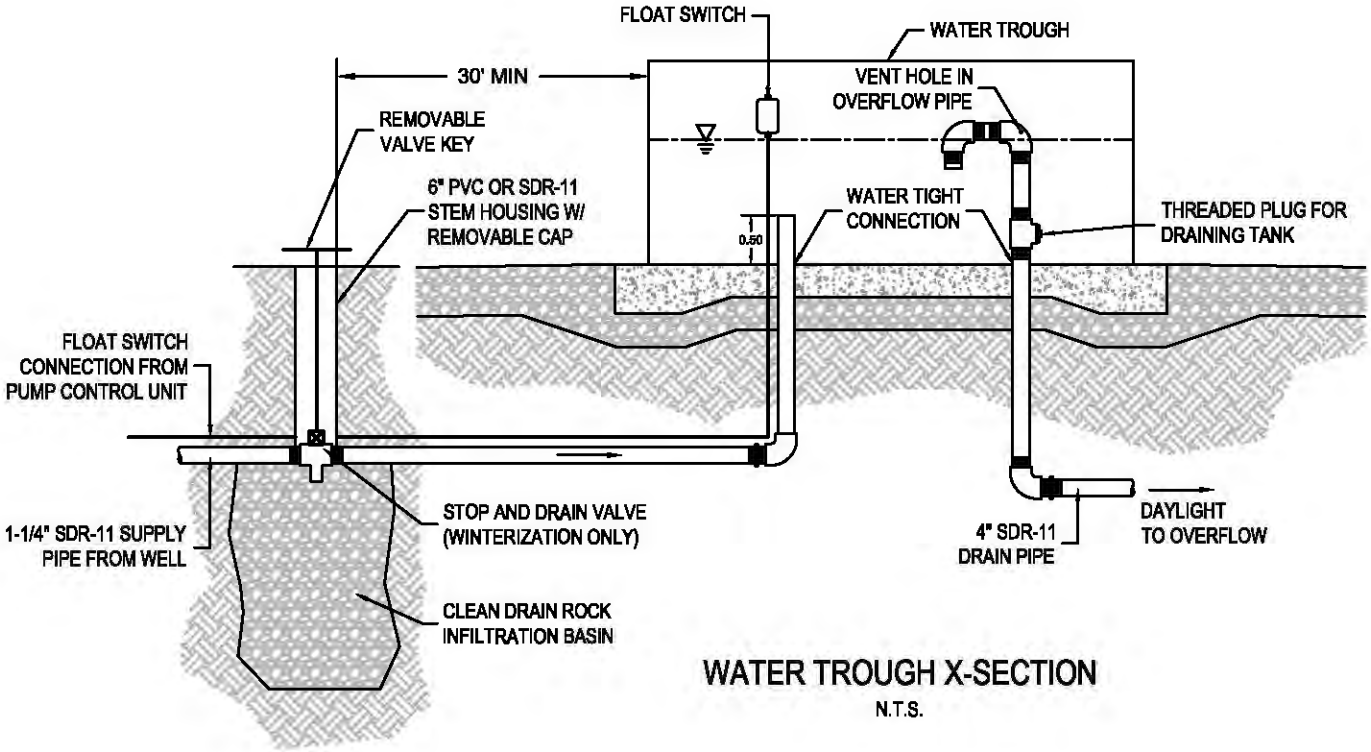

WATER TROUGH X-SECTION

N.T.S.

STANDARD DETAIL
STOCK WATER TROUGH
(RECTANGULAR)

RIO VERDE ENGINEERING
(307) 367-2826
FAX# (307)-367-2346
PINEDALE, WYOMING

DESIGNED BY:
DRAWN BY: MTJ
CHECKED BY: MCE
DATE: 4/21/17
REV:
JOB NO: 4183
PAGE: 1 OF 1

PROJECT STAKEHOLDER

MCGUIRE, RYAN

NEW FORK RIVER WATERSHED STUDY LEVEL I

Owner/Operator: McGuire, Ryan
Project Type: Small Water Storage
Project ID: 37
Project Name: Kaylou Stock Reservoir Rehabilitation Project
Location (PLSS): Sec. 25, T.37N., R.110W.
Location (Lat/Long): 43.14235°, 109.99414°

PROJECT COMPONENTS - ITEMIZED COSTS

ITEM No.	DESCRIPTION	QUANTITY	UNIT	UNIT COST	TOTAL COST
1	Mobilization	1	LS	$ 700.00	$ 700.00
2	Bonds	1	LS	$ 300.00	$ 300.00
3	18" ADS N-12 Pipe	20	LF	$ 46.00	$ 920.00
4	18" Distributing Gate	1	EA	$ 450.00	$ 450.00
5	Misc. Excavation & Placement	135	CY	$ 22.00	$ 2,970.00
6	Construct Principal Drain Ditch	130	LF	$ 16.00	$ 2,080.00
12	Rock Rip-Rap	20	CY	$ 42.00	$ 840.00
				TOTAL COMPONENT COST (SUBTOTAL #2):	$ 8,260.00

PREPARATION OF FINAL DESIGNS & SPECIFICATIONS:	$ 800.00
PERMITTING AND MITIGATION:	$ 500.00
LEGAL FEES:	$ -
ACQUISTION OF ACCESS AND RIGHTS-OF-WAY:	$ -
PRE-CONSTRUCTION COSTS (**SUBTOTAL #1**):	$ 1,300.00
TOTAL COMPONENT COST **(SUBTOTAL #2**):	$ 8,260.00
CONSTRUCTION ENGINEERING COST (SUBTOTAL #2 x 10%):	$ 826.00
COMPONENTS AND ENGINEERING COSTS (**SUBTOTAL #3**):	$ 9,086.00
CONTINGENCY (SUBTOTAL #3 X 15%):	$ 1,362.90
TOTAL CONSTRUCTION COST (**SUBTOTAL #4**):	$ 10,448.90
TOTAL PROJECT COST (**SUBTOTAL #1 + SUBTOTAL #4**):	**$ 11,748.90**

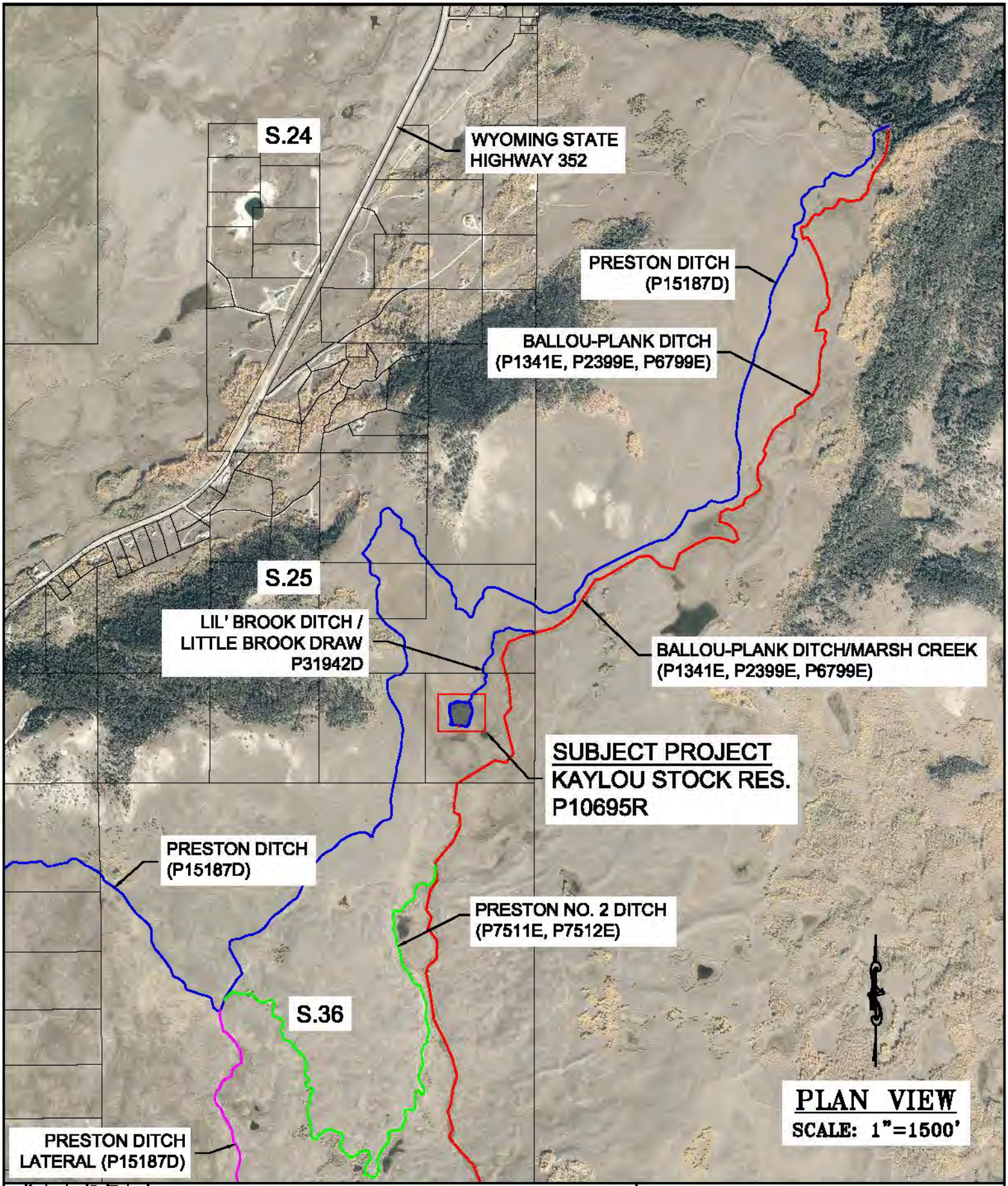

DESIGNED BY: MTJ	
DRAWN BY: MTJ	
CHECKED BY: MCE	
DATE: 7/05/17	
REV:	
JOB NO: 4183	
PAGE: 1 OF 2	

WWDC–NEW FORK RIVER WATERSHED MASTER PLAN–LEVEL I STUDY

RYAN McGUIRE (KAYLOU STOCK RES. VICINITY MAP)
LOCATED IN SECTION 25, T.37N., R.110W.,
SUBLETTE COUNTY, WY

RIO VERDE ENGINEERING
(307) 367-2826
FAX# (307)-367-2546
PINEDALE, WYOMING

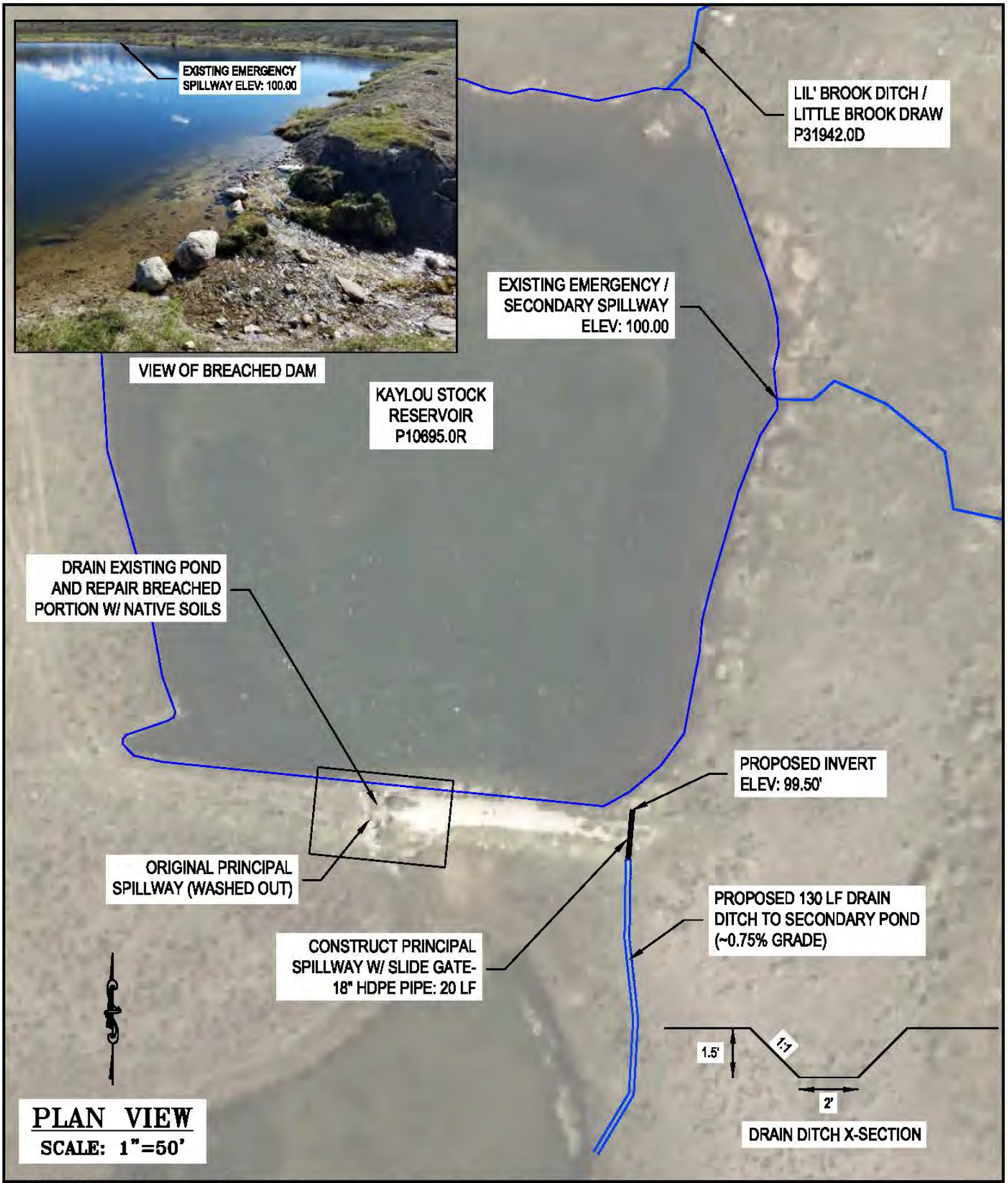

PLAN VIEW

SCALE: 1"=50'

DESIGNED BY: MTJ	WWDC–NEW FORK RIVER WATERSHED MASTER PLAN–LEVEL I STUDY
DRAWN BY: MTJ	RYAN McGUIRE (KAYLOU STOCK RES. OUTLET REHAB)
CHECKED BY: MCE	LOCATED IN SECTION 25, T.37N., R.110W.,
DATE: 7/05/17	SUBLETTE COUNTY, WY
REV:	
JOB NO: 4183	
PAGE: 2 OF 2	

RIO VERDE ENGINEERING
(307) 367-2826
FAX# (307)-367-2546
PINEDALE, WYOMING

PROJECT STAKEHOLDER

MURDOCK RANCH

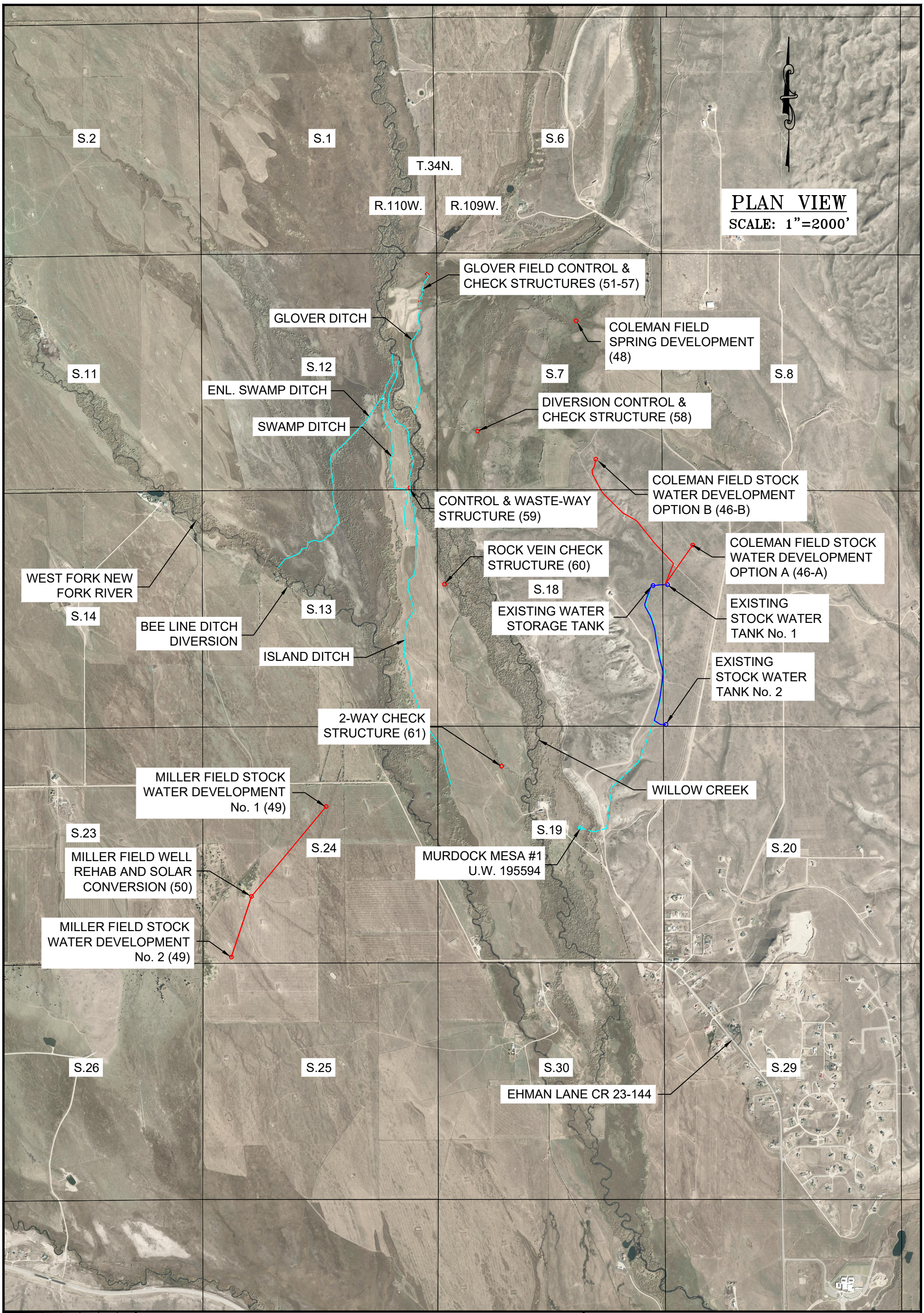

DESIGNED BY:
DRAWN BY: MTJ
CHECKED BY: MCE
DATE: 7/31/17
REV:
JOB NO: 4183
PAGE: 1 OF 1

WWDC–NEW FORK RIVER WATERSHED
MASTER PLAN–LEVEL I STUDY
MURDOCK RANCH PROJECTS OVERVIEW
LOCATED IN
SUBLETTE COUNTY, WY

RIO VERDE ENGINEERING
(307) 367–2826
FAX# (307)–367–2546
PINEDALE, WYOMING

NEW FORK RIVER WATERSHED STUDY LEVEL I

Owner/Operator: Murdock Ranch
Project Type: Source Water Development
Project ID: 46 (Option A)
Project Name: Coleman Field Stock Water Development Project
Location (PLSS): Secs. 7, 17, & 18 T.34N., R.109W.
Location (Lat/Long): 42.92690°, 109.90648°

PROJECT COMPONENTS - ITEMIZED COSTS

ITEM No.	DESCRIPTION	QUANTITY	UNIT	UNIT COST	TOTAL COST
1	Mobilization	1	LS	$ 1,200.00	$ 1,200.00
2	Bonds	1	LS	$ 300.00	$ 300.00
3	2,000 gal Tire Trough (Complete)	1	LS	$ 10,000.00	$ 10,000.00
4	2" SDR-11 Supply Line	1100	LF	$ 3.75	$ 4,125.00
5	2" Tee	2	EA	$ 35.00	$ 70.00
6	2" Gate Valve	2	EA	$ 220.00	$ 440.00
7	2" Daylight Drain	1	EA	$ 250.00	$ 250.00
				TOTAL COMPONENT COST (SUBTOTAL #2):	$ 16,385.00

PREPARATION OF FINAL DESIGNS & SPECIFICATIONS:	$ 1,200.00
PERMITTING AND MITIGATION:	$ 1,300.00
LEGAL FEES:	$ -
ACQUISTION OF ACCESS AND RIGHTS-OF-WAY:	$ -
PRE-CONSTRUCTION COSTS (**SUBTOTAL #1**):	$ 2,500.00
TOTAL COMPONENT COST (**SUBTOTAL #2**):	$ 16,385.00
CONSTRUCTION ENGINEERING COST (SUBTOTAL #2 x 10%):	$ 1,638.50
COMPONENTS AND ENGINEERING COSTS (**SUBTOTAL #3**):	$ 18,023.50
CONTINGENCY (SUBTOTAL #3 X 15%):	$ 2,703.53
TOTAL CONSTRUCTION COST (**SUBTOTAL #4**):	$ 20,727.03
TOTAL PROJECT COST (**SUBTOTAL #1 + SUBTOTAL #4**):	**$ 23,227.03**

NEW FORK RIVER WATERSHED STUDY LEVEL I

Owner/Operator: Murdock Ranch
Project Type: Source Water Development
Project ID: 46 (Option B)
Project Name: Coleman Field Stock Water Development Project
Location (PLSS): Secs. 7, 17, & 18 T.34N., R.109W.
Location (Lat/Long): 42.92690°, 109.90648°

PROJECT COMPONENTS - ITEMIZED COSTS

ITEM No.	DESCRIPTION	QUANTITY	UNIT	UNIT COST	TOTAL COST
1	Mobilization	1	LS	$ 1,200.00	$ 1,200.00
2	Bonds	1	LS	$ 300.00	$ 300.00
3	1000 gal Tire Trough (Complete)	1	LS	$ 10,000.00	$ 10,000.00
4	2" SDR-11 Supply Line	3620	LF	$ 3.75	$ 13,575.00
5	2" Tee	1	EA	$ 35.00	$ 35.00
6	2" Gate Valve	1	EA	$ 220.00	$ 220.00
				TOTAL COMPONENT COST (SUBTOTAL #2):	$ 25,330.00

PREPARATION OF FINAL DESIGNS & SPECIFICATIONS:	$ 1,200.00
PERMITTING AND MITIGATION:	$ 1,300.00
LEGAL FEES:	$ -
ACQUISTION OF ACCESS AND RIGHTS-OF-WAY:	$ -
PRE-CONSTRUCTION COSTS (**SUBTOTAL #1**):	$ 2,500.00
TOTAL COMPONENT COST **(SUBTOTAL #2**):	$ 25,330.00
CONSTRUCTION ENGINEERING COST (SUBTOTAL #2 x 10%):	$ 2,533.00
COMPONENTS AND ENGINEERING COSTS (**SUBTOTAL #3**):	$ 27,863.00
CONTINGENCY (SUBTOTAL #3 X 15%):	$ 4,179.45
TOTAL CONSTRUCTION COST (**SUBTOTAL #4**):	$ 32,042.45
TOTAL PROJECT COST (**SUBTOTAL #1 + SUBTOTAL #4**):	**$ 34,542.45**

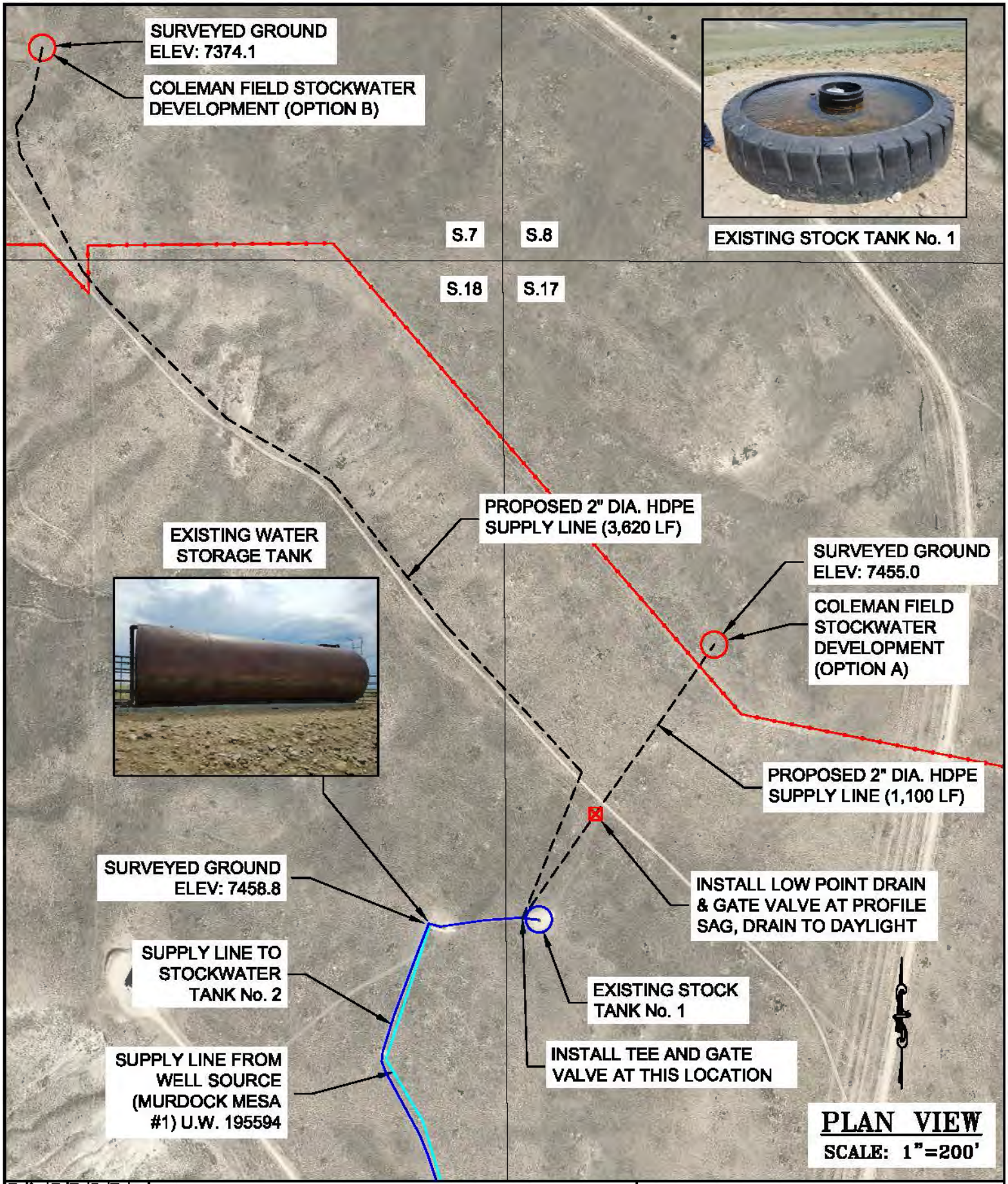

DESIGNED BY: MTJ
DRAWN BY: MTJ
CHECKED BY: MCE
DATE: 7/17/17
REV:
JOB NO: 4183
PAGE: 1 OF 1

WWDC–NEW FORK RIVER WATERSHED MASTER PLAN–LEVEL I STUDY

MURDOCK RANCH (COLEMAN FIELD STOCK WATER TANK)
LOCATED IN SECTIONS 7, 17 & 18, T.34N., R.109W.,
SUBLETTE COUNTY, WY

RIO VERDE ENGINEERING
(307) 367-2826
FAX# (307)-367-2546
PINEDALE, WYOMING

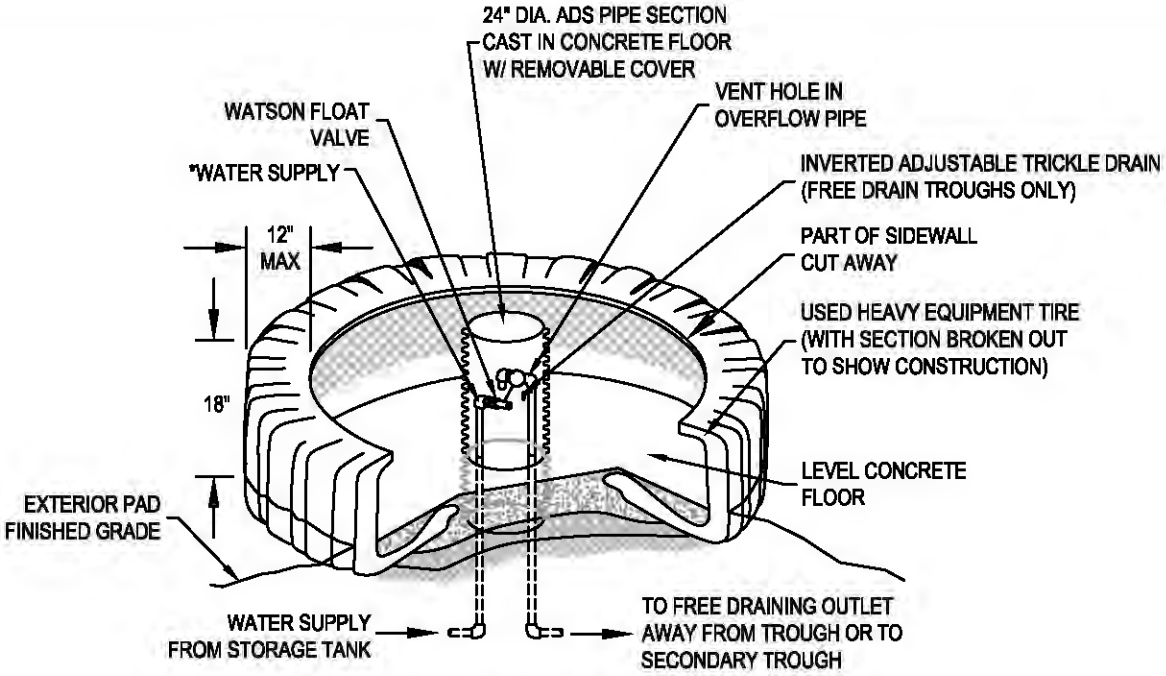

WATERING TROUGH ISOMETRIC VIEW

N.T.S.

INFLOW PIPE DIA. - 2"

OVERFLOW PIPE DIA. - 4 IN.

CONCRETE SLAB THICKNESS - 6 IN.

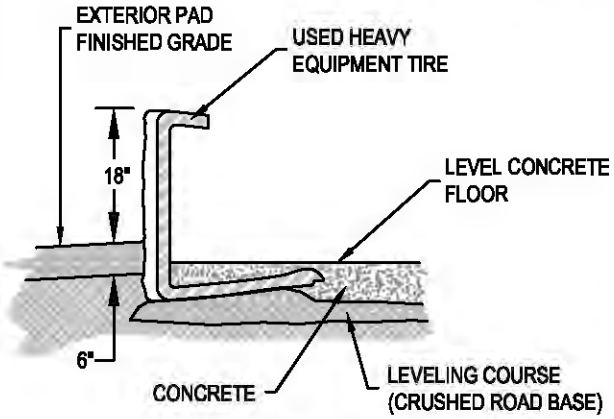

SECTION VIEW

N.T.S.

*TO REDUCE FREEZING, POINT THE INFLOW IN THE DIRECTION THAT WILL CAUSE THE MOST WATER MOVEMENT.

INSTALLATION NOTES

1.) CUT AWAY PART OF SIDEWALL. THIS WILL BE THE TOP OF THE TROUGH

2.) USE THE CRUSHED ROAD BASE TO FILL AROUND THE PIPES AND TO LEVEL THE TIRE.

3.) POUR CONCRETE AROUND ADS PIPE, WATER SUPPLY, OVERFLOW PIPES AND WORK UNDER INTERIOR EDGE OF TIRE. FINISH THE TOP SURFACE OF CONCRETE TO FORM A LEVEL PAD ACROSS THE TROUGH BOTTOM.

4.) PROVIDE AN ESCAPE DEVICE FOR SMALL BIRDS AND ANIMALS THAT MAY BECOME ENTRAPPED. A RAMP CONSTRUCTED OF A PIECE OF EXPANDED METAL EXTENDING FROM THE WATER SURFACE TO THE TOP SIDEWALL OR A FLOAT CONSISTING OF A PIECE OF LUMBER ARE TWO DEVICES THAT COULD BE USED.

5.) EXTEND CRUSHED ROAD BASE PAD 6 FT. OUT FROM EXTERIOR TIRE EDGE

*DESIGN BASED ON NRCS STANDARDIZED DRAWING AND DESIGN INPUT FROM BROGAN HYDROLOGIC CONSULTING. DESIGN MUST BE ADAPTED TO MEET SITE SPECIFIC CONDITIONS.

PAGE: 1 OF 1	JOB NO: 4183	REV:	DATE: 4/21/17	CHECKED BY: MCE	DRAWN BY: MTJ	DESIGNED BY:

STANDARD DETAIL
HEAVY EQUIPMENT TIRE TROUGH

U.S.D.A. NATURAL RESOURCES CONSERVATION SERVICE

RIO VERDE ENGINEERING
(307) 367-2826
FAX (307)-367-2846 PINEDALE, WYOMING

NEW FORK RIVER WATERSHED STUDY LEVEL I

Owner/Operator: Murdock Ranch
Project Type: Source Water Development
Project ID: 48
Project Name: Coleman Field Spring Development Project
Location (PLSS): Sec. 7, T.34N., R.109W.
Location (Lat/Long): 42.93539°, 109.90817°

PROJECT COMPONENTS - ITEMIZED COSTS

ITEM No.	DESCRIPTION	QUANTITY	UNIT	UNIT COST	TOTAL COST
1	Mobilization	1	LS	$ 1,200.00	$ 1,200.00
2	Bonds	1	LS	$ 300.00	$ 300.00
3	Spring Box (Complete Installed)	1	LS	$ 1,600.00	$ 1,600.00
4	Spring Collector (Complete Installed)	1	LS	$ 1,100.00	$ 1,100.00
5	2" SDR-11 Supply Line	100	LF	$ 3.75	$ 375.00
6	4" SDR-11 Drain Line	105	LF	$ 6.95	$ 729.75
7	4-Rail Pole Fence	190	LF	$ 8.00	$ 1,520.00
8	2,000 gal Tire Trough (Complete)	1	LS	$ 10,000.00	$ 10,000.00
				TOTAL COMPONENT COST (SUBTOTAL #2):	$ 16,824.75

PREPARATION OF FINAL DESIGNS & SPECIFICATIONS:	$ 800.00
PERMITTING AND MITIGATION:	$ 300.00
LEGAL FEES:	$ -
ACQUISTION OF ACCESS AND RIGHTS-OF-WAY:	$ -
PRE-CONSTRUCTION COSTS (**SUBTOTAL #1**):	$ 1,100.00
TOTAL COMPONENT COST **(SUBTOTAL #2**):	$ 16,824.75
CONSTRUCTION ENGINEERING COST (SUBTOTAL #2 x 10%):	$ 1,682.48
COMPONENTS AND ENGINEERING COSTS (**SUBTOTAL #3**):	$ 18,507.23
CONTINGENCY (SUBTOTAL #3 X 15%):	$ 2,776.08
TOTAL CONSTRUCTION COST (**SUBTOTAL #4**):	$ 21,283.31
TOTAL PROJECT COST (**SUBTOTAL #1 + SUBTOTAL #4**):	**$ 22,383.31**

WWDC–NEW FORK RIVER WATERSHED
MASTER PLAN–LEVEL I STUDY
MURDOCK RANCH (COLEMAN FIELD SPRING DEVELOPMENT)
LOCATED IN SECTION 7, T.34N., R.109W.,
SUBLETTE COUNTY, WY

RIO VERDE ENGINEERING
(307) 367-2826
FAX: (307)-367-2346
PINEDALE, WYOMING

DESIGNED BY: MTJ
DRAWN BY: MTJ
CHECKED BY: MCE
DATE: 7/17/17
REV:
JOB NO: 4183
PAGE: 1 OF 1

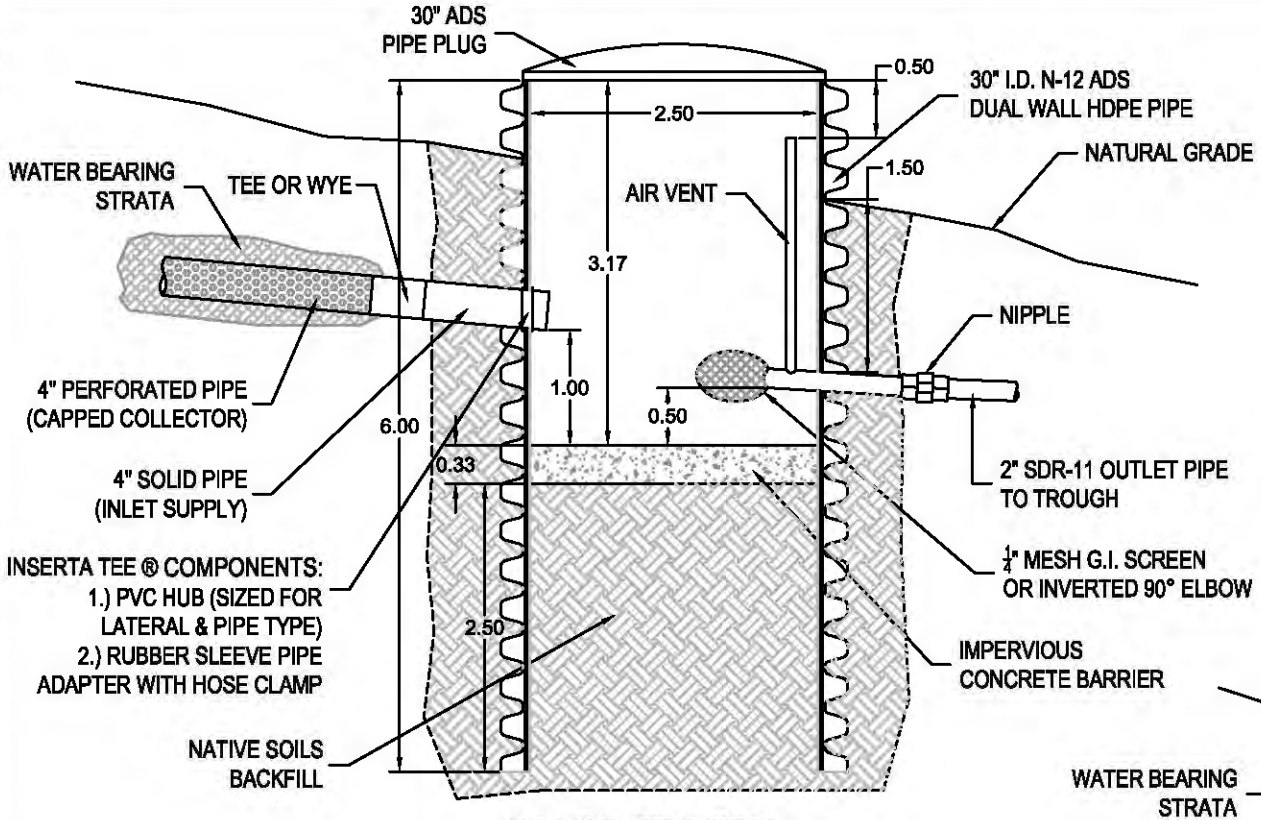

CROSS SECTION A-A'

N.T.S.

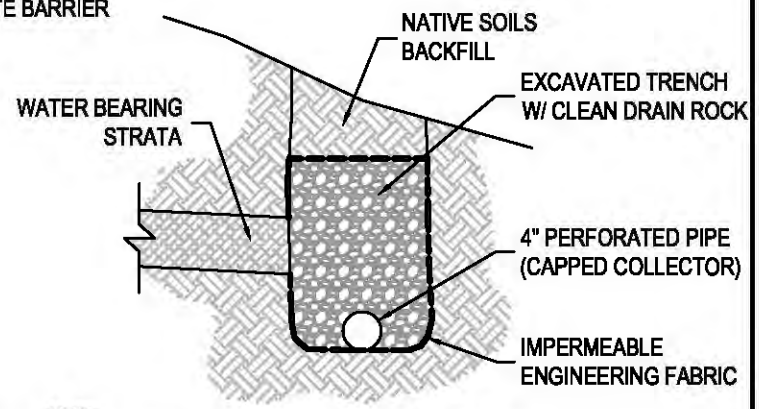

CROSS SECTION B-B'

N.T.S.

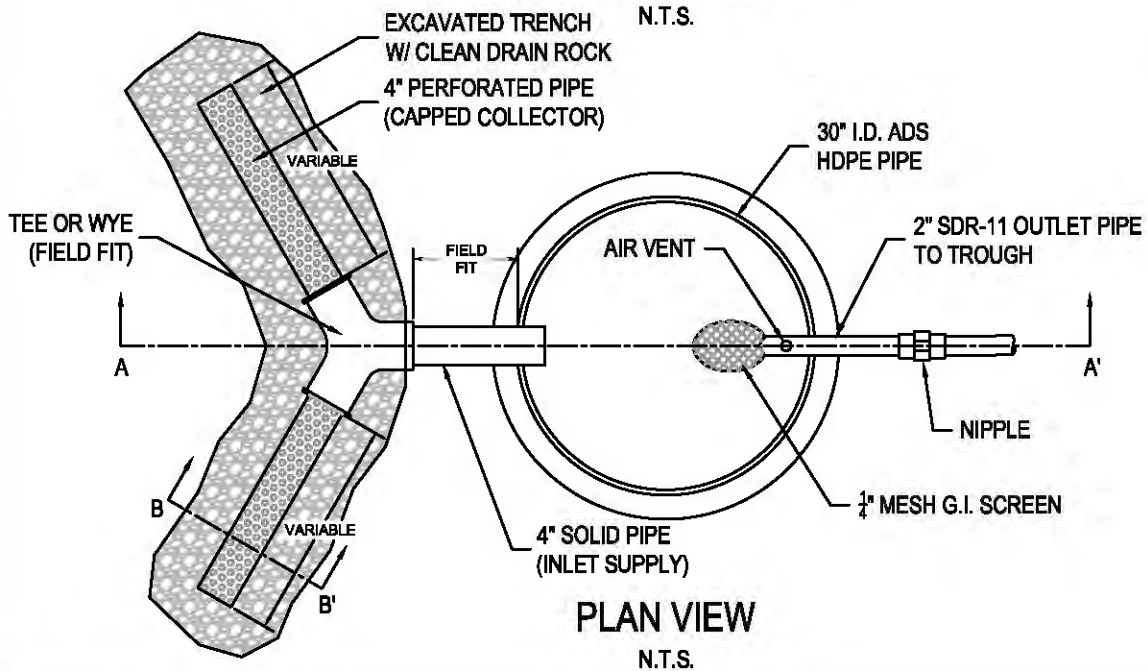

PLAN VIEW

N.T.S.

STANDARD DRAWING

SIDE HILL SPRING BOX COLLECTION SYSTEM

RIO VERDE ENGINEERING
(307) 367-2826
FAX# (307)-367-2546
PINEDALE, WYOMING

DESIGNED BY: MTJ	
DRAWN BY: MTJ	
CHECKED BY: MCE	
DATE: 4/21/17	
REV:	
JOB NO: 4183	
PAGE: 1 OF 1	

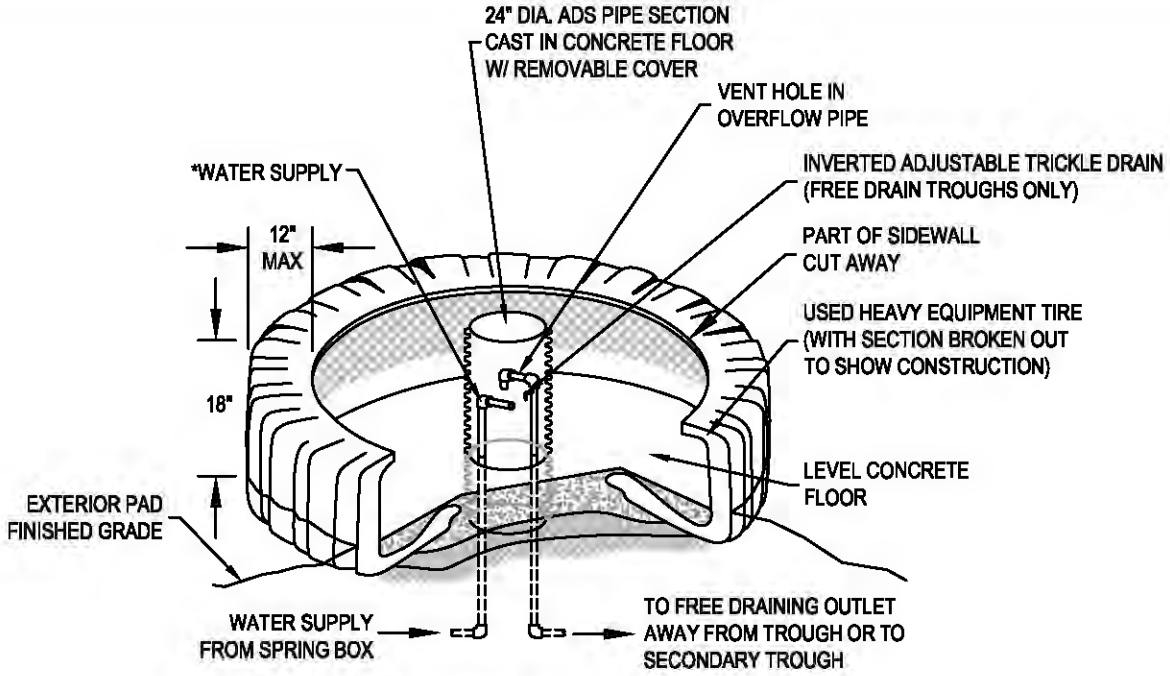

WATERING TROUGH
ISOMETRIC VIEW
N.T.S.

INFLOW PIPE DIA. - 2"

OVERFLOW PIPE DIA. - 4 IN.

CONCRETE SLAB THICKNESS - 6 IN.

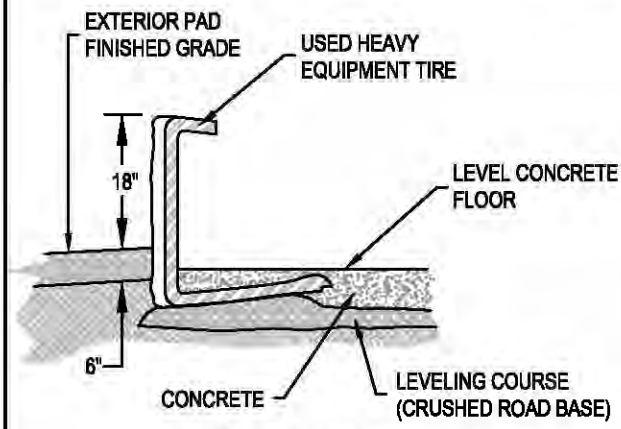

SECTION VIEW
N.T.S.

*TO REDUCE FREEZING, POINT THE INFLOW IN THE DIRECTION THAT WILL CAUSE THE MOST WATER MOVEMENT.

INSTALLATION NOTES

1.) CUT AWAY PART OF SIDEWALL. THIS WILL BE THE TOP OF THE TROUGH

2.) USE THE CRUSHED ROAD BASE TO FILL AROUND THE PIPES AND TO LEVEL THE TIRE.

3.) POUR CONCRETE AROUND ADS PIPE, WATER SUPPLY, OVERFLOW PIPES AND WORK UNDER INTERIOR EDGE OF TIRE. FINISH THE TOP SURFACE OF CONCRETE TO FORM A LEVEL PAD ACROSS THE TROUGH BOTTOM.

4.) PROVIDE AN ESCAPE DEVICE FOR SMALL BIRDS AND ANIMALS THAT MAY BECOME ENTRAPPED. A RAMP CONSTRUCTED OF A PIECE OF EXPANDED METAL EXTENDING FROM THE WATER SURFACE TO THE TOP SIDEWALL OR A FLOAT CONSISTING OF A PIECE OF LUMBER ARE TWO DEVICES THAT COULD BE USED.

5.) EXTEND CRUSHED ROAD BASE PAD 6 FT. OUT FROM EXTERIOR TIRE EDGE

*DESIGN BASED ON NRCS STANDARDIZED DRAWING AND DESIGN INPUT FROM BROGAN HYDROLOGIC CONSULTING. DESIGN MUST BE ADAPTED TO MEET SITE SPECIFIC CONDITIONS.

PAGE: 1 OF 1	
JOB NO: 4183	
REV:	
DATE: 4/21/17	
CHECKED BY: MCE	
DRAWN BY: MTJ	
DESIGNED BY:	

STANDARD DETAIL
HEAVY EQUIPMENT
TIRE TROUGH

U.S.D.A. NATURAL RESOURCES
CONSERVATION SERVICE

RIO VERDE
ENGINEERING
(307) 367-2826
FAX (307)-367-2846 PINEDALE, WYOMING

NEW FORK RIVER WATERSHED STUDY LEVEL I

Owner/Operator: Murdock Ranch
Project Type: Source Water Development
Project ID: 49
Project Name: Miller Field Stock Water Development Projects
Location (PLSS): Sec. 24 T.34N., R.110W.
Location (Lat/Long): 42.92690°, 109.90648°

PROJECT COMPONENTS - ITEMIZED COSTS

ITEM No.	DESCRIPTION	QUANTITY	UNIT	UNIT COST	TOTAL COST
1	Mobilization	1	LS	$ 3,100.00	$ 3,100.00
2	Bonds	1	LS	$ 800.00	$ 800.00
4	750 gal Tire Trough (Complete)	2	LS	$ 6,500.00	$ 13,000.00
5	Side Mounted Trough Heater	2	EA	$ 345.00	$ 690.00
6	Geo-thermal Insulated Heat Tube	2	LS	$ 1,250.00	$ 2,500.00
7	2" SDR-11 Supply Line	4130	LF	$ 3.75	$ 15,487.50
8	2" Tee & Gate Valve	1	LS	$ 220.00	$ 220.00
				TOTAL COMPONENT COST (SUBTOTAL #2):	$ 35,797.50

PREPARATION OF FINAL DESIGNS & SPECIFICATIONS:	$ 1,200.00
PERMITTING AND MITIGATION:	$ 600.00
LEGAL FEES:	$ -
ACQUISTION OF ACCESS AND RIGHTS-OF-WAY:	$ -
PRE-CONSTRUCTION COSTS (**SUBTOTAL #1**):	$ 1,800.00
TOTAL COMPONENT COST (**SUBTOTAL #2**):	$ 35,797.50
CONSTRUCTION ENGINEERING COST (SUBTOTAL #2 x 10%):	$ 3,579.75
COMPONENTS AND ENGINEERING COSTS (**SUBTOTAL #3**):	$ 39,377.25
CONTINGENCY (SUBTOTAL #3 X 15%):	$ 5,906.59
TOTAL CONSTRUCTION COST (**SUBTOTAL #4**):	$ 45,283.84
TOTAL PROJECT COST (**SUBTOTAL #1 + SUBTOTAL #4**):	**$ 47,083.84**

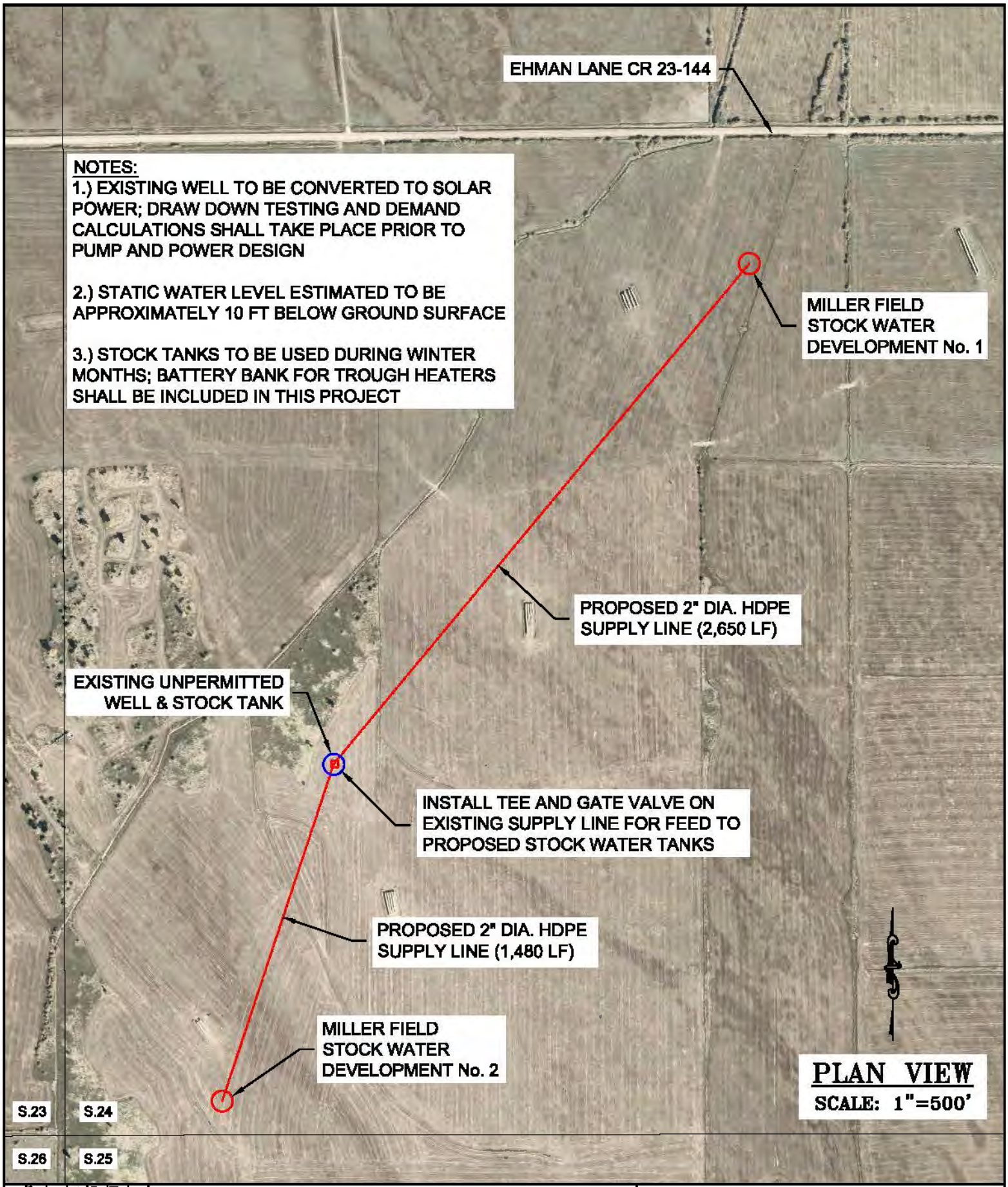

DESIGNED BY: MTJ
DRAWN BY: MTJ
CHECKED BY: MCE
DATE: 7/31/17
REV:
JOB NO: 4183
PAGE: 1 OF 1

WWDC–NEW FORK RIVER WATERSHED MASTER PLAN–LEVEL I STUDY

MURDOCK RANCH (MILLER FIELD STOCK WATER TANKS)
LOCATED IN SECTION 24, T.34N., R.110W.,
SUBLETTE COUNTY, WY

RIO VERDE ENGINEERING
(307) 367-2826
FAX# (307)-367-2546
PINEDALE, WYOMING

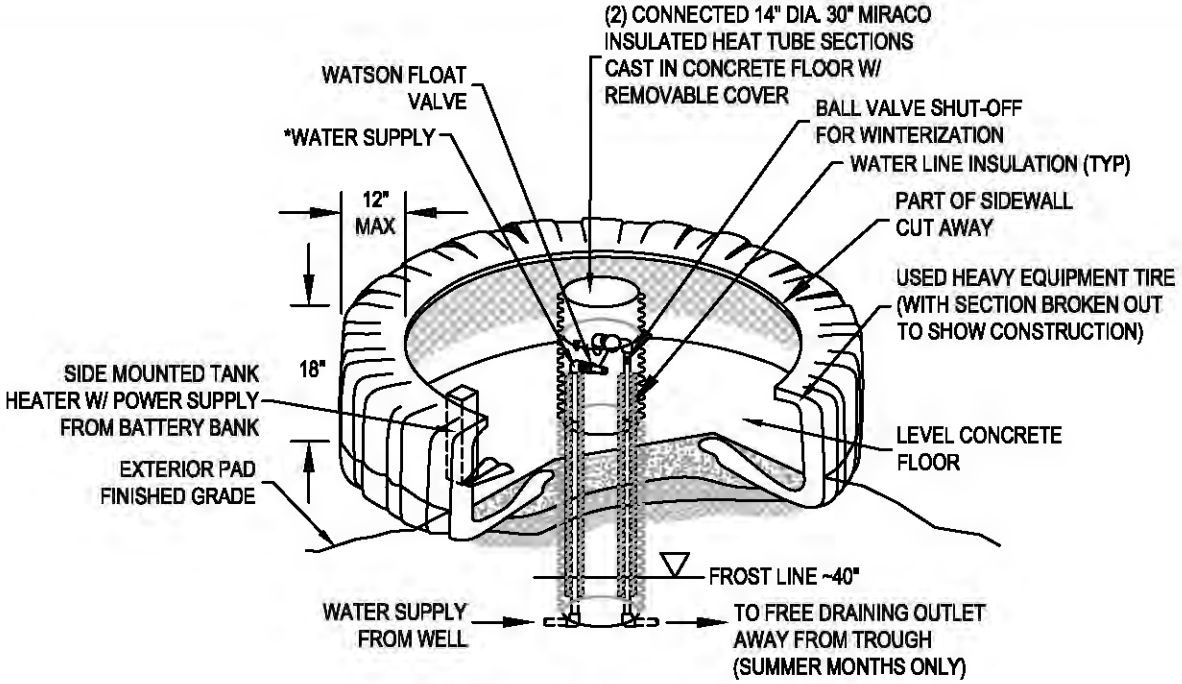

WATERING TROUGH
ISOMETRIC VIEW
N.T.S.

INFLOW PIPE DIA. - 2"

OVERFLOW PIPE DIA. - 4 IN.

CONCRETE SLAB THICKNESS - 6 IN.

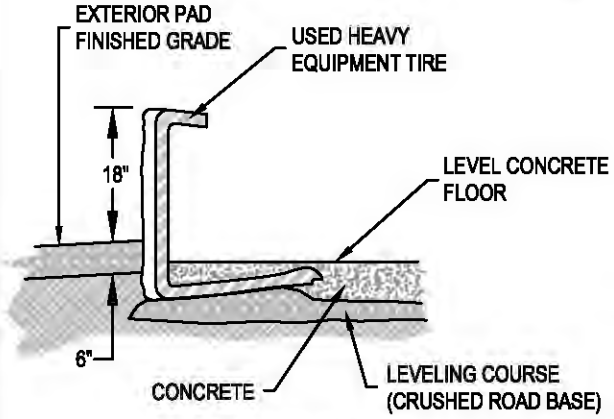

SECTION VIEW
N.T.S.

*TO REDUCE FREEZING, POINT THE INFLOW IN THE DIRECTION THAT WILL CAUSE THE MOST WATER MOVEMENT.

INSTALLATION NOTES

1.) CUT AWAY PART OF SIDEWALL. THIS WILL BE THE TOP OF THE TROUGH

2.) USE THE CRUSHED ROAD BASE TO FILL AROUND THE PIPES AND TO LEVEL THE TIRE.

3.) POUR CONCRETE AROUND MIRACO PIPE AND WORK UNDER INTERIOR EDGE OF TIRE. FINISH THE TOP SURFACE OF CONCRETE TO FORM A LEVEL PAD ACROSS THE TROUGH BOTTOM.

4.) PROVIDE AN ESCAPE DEVICE FOR SMALL BIRDS AND ANIMALS THAT MAY BECOME ENTRAPPED. A RAMP CONSTRUCTED OF A PIECE OF EXPANDED METAL EXTENDING FROM THE WATER SURFACE TO THE TOP SIDEWALL OR A FLOAT CONSISTING OF A PIECE OF LUMBER ARE TWO DEVICES THAT COULD BE USED.

5.) EXTEND CRUSHED ROAD BASE PAD 6 FT. OUT FROM EXTERIOR TIRE EDGE

*DESIGN BASED ON NRCS STANDARDIZED DRAWING AND DESIGN INPUT FROM BROGAN HYDROLOGIC CONSULTING. DESIGN MUST BE ADAPTED TO MEET SITE SPECIFIC CONDITIONS. SOLAR ARRAY MUST BE DESIGNED FOR SPECIFIC HEATER APPLICATION AND DEMAND.

PAGE: 1 OF 1	
JOB NO: 4183	
REV:	
DATE: 4/21/17	
CHECKED BY: MCE	
DRAWN BY: MTJ	
DESIGNED BY:	

STANDARD DETAIL
HEAVY EQUIPMENT
750 GALLON TIRE TROUGH

U.S.D.A. NATURAL RESOURCES CONSERVATION SERVICE

RIO VERDE ENGINEERING
(307) 367-2826
FAX (307)-367-2846 PINEDALE, WYOMING

NEW FORK RIVER WATERSHED STUDY LEVEL I

Owner/Operator: Murdock Ranch
Project Type: Source Water Development
Project ID: 50
Project Name: Miller Field Well Power Conversion Project
Location (PLSS): Sec. 24, T.34N., R.110W.
Location (Lat/Long): 42.89994°, 109.93546°

PROJECT COMPONENTS - ITEMIZED COSTS

ITEM No.	DESCRIPTION	QUANTITY	UNIT	UNIT COST	TOTAL COST
1	Mobilization	1	LS	$ 1,200.00	$ 1,200.00
2	Bonds	1	LS	$ 300.00	$ 300.00
3	Pump Test	1	LS	$ 3,500.00	$ 3,500.00
4	Submersible Pump & Equipment	1	LS	$ 2,600.00	$ 2,600.00
5	Solar Array (Complete)	1	LS	$ 6,200.00	$ 6,200.00
6	4-Rail Pole Fence	100	LF	$ 8.50	$ 850.00
				TOTAL COMPONENT COST (SUBTOTAL #2):	$ 14,650.00

PREPARATION OF FINAL DESIGNS & SPECIFICATIONS:	$ 1,100.00
PERMITTING AND MITIGATION:	$ 800.00
LEGAL FEES:	$ -
ACQUISTION OF ACCESS AND RIGHTS-OF-WAY:	$ -
PRE-CONSTRUCTION COSTS (**SUBTOTAL #1**):	$ 1,900.00
TOTAL COMPONENT COST **(SUBTOTAL #2**):	$ 14,650.00
CONSTRUCTION ENGINEERING COST (SUBTOTAL #2 x 10%):	$ 1,465.00
COMPONENTS AND ENGINEERING COSTS (**SUBTOTAL #3**):	$ 16,115.00
CONTINGENCY (SUBTOTAL #3 X 15%):	$ 2,417.25
TOTAL CONSTRUCTION COST (**SUBTOTAL #4**):	$ 18,532.25
TOTAL PROJECT COST (**SUBTOTAL #1 + SUBTOTAL #4**):	**$ 20,432.25**

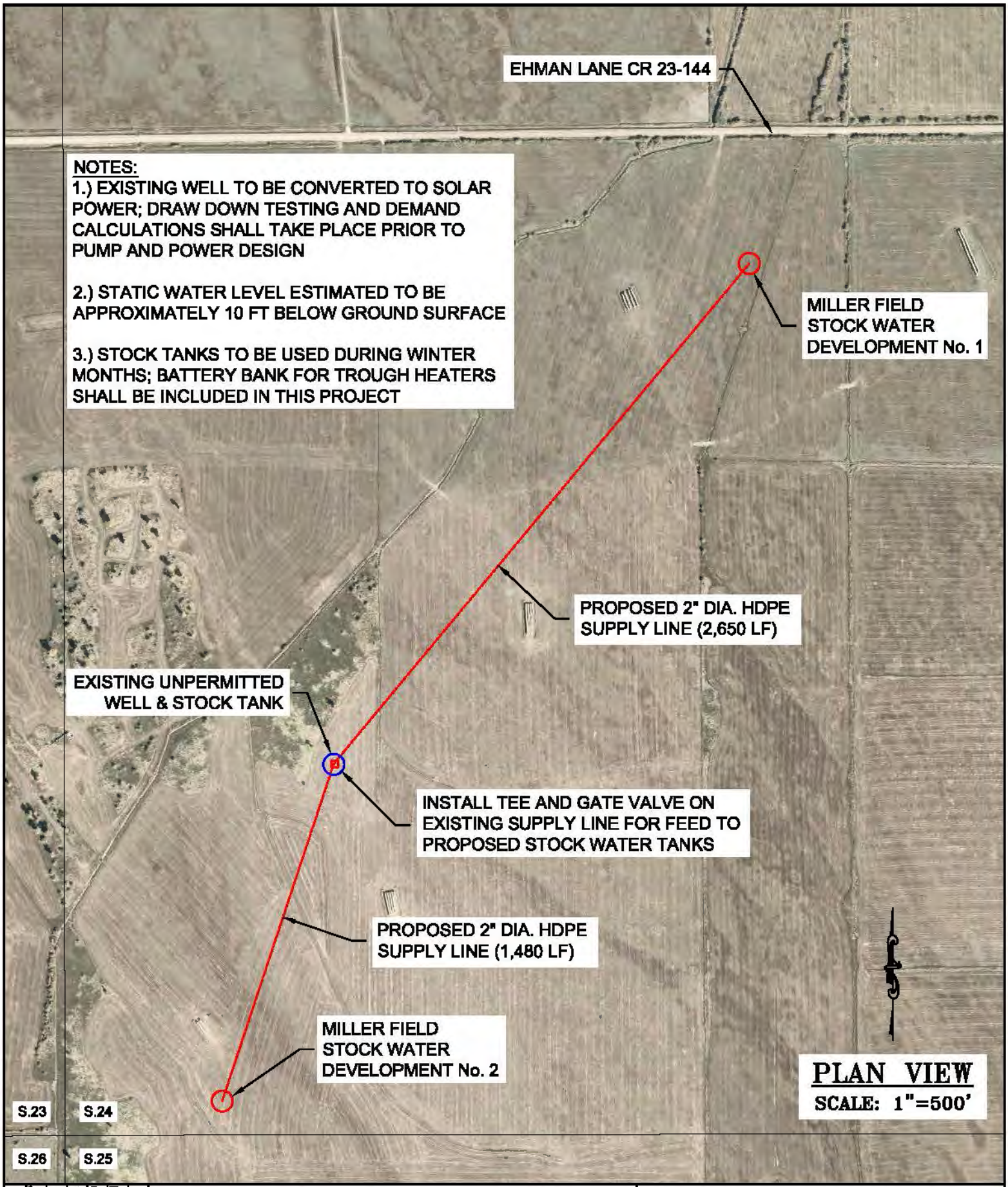

DESIGNED BY: MTJ
DRAWN BY: MTJ
CHECKED BY: MCE
DATE: 7/31/17
REV:
JOB NO: 4183
PAGE: 1 OF 1

WWDC–NEW FORK RIVER WATERSHED MASTER PLAN–LEVEL I STUDY

MURDOCK RANCH (MILLER FIELD STOCK WATER TANKS)
LOCATED IN SECTION 24, T.34N., R.110W.,
SUBLETTE COUNTY, WY

RIO VERDE ENGINEERING
(307) 367-2826
FAX# (307)-367-2546
PINEDALE, WYOMING

DISCLAIMER:

FIELD VERIFICATION IS NEEDED REGARDING WATER ZONES, STATIC WATER LEVEL, WATER YIELD, & DRAW DOWN. ACTUAL WELL DEPTHS AND POWER REQUIREMENTS WILL VARY.

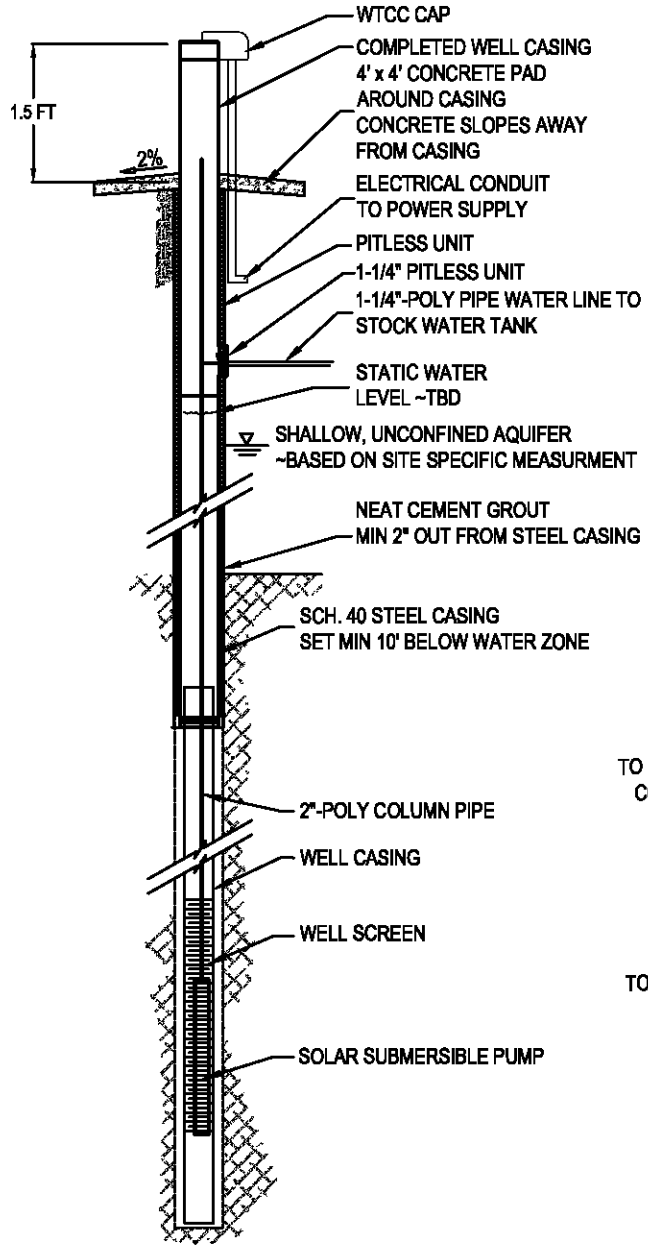

TYPICAL WELL

NOT TO SCALE

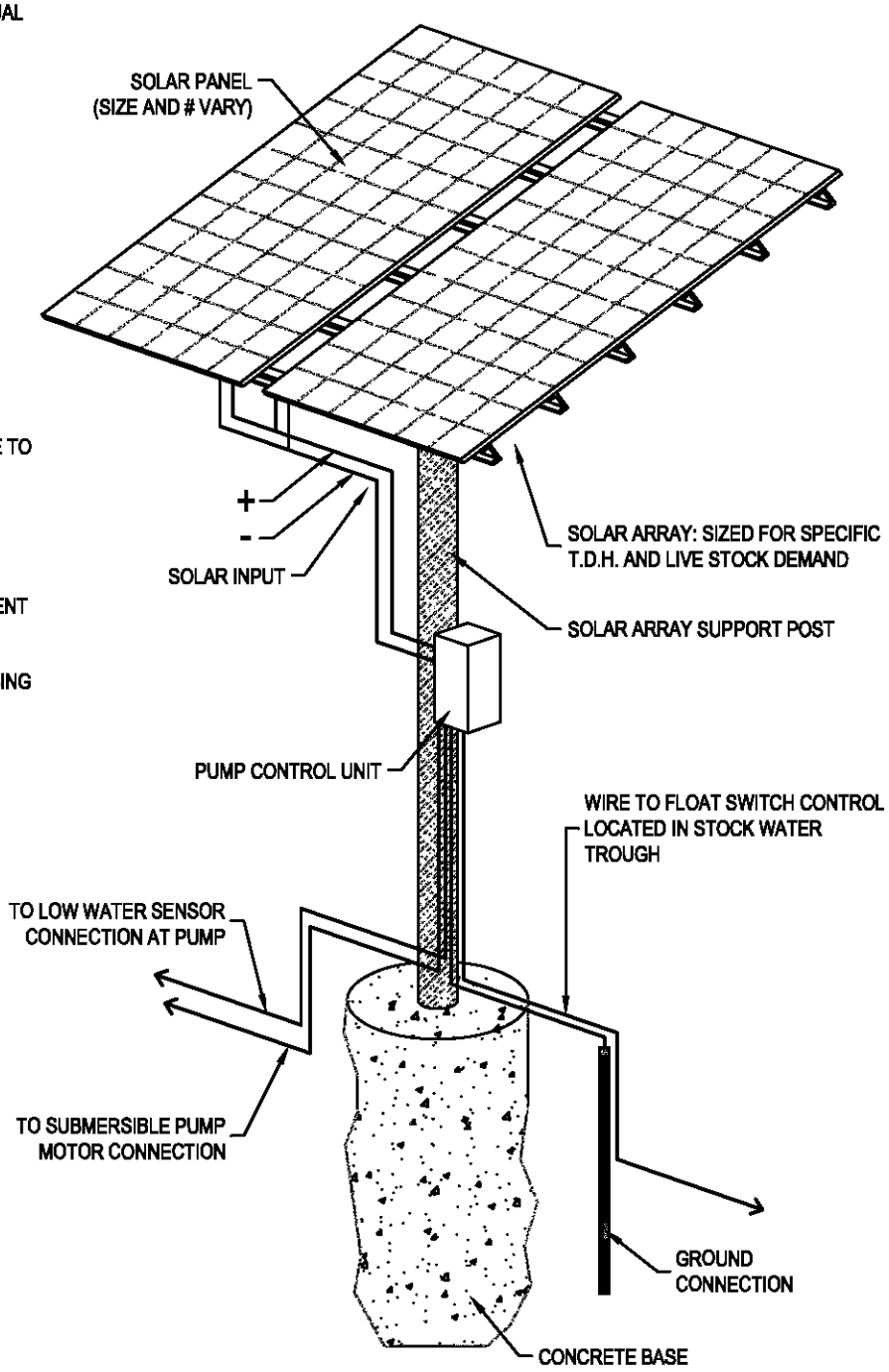

TYPICAL SOLAR ARRAY

NOT TO SCALE

DESIGNED BY:	
DRAWN BY: MTJ	
CHECKED BY: MCE	
DATE: 6/05/17	
REV:	
JOB NO: 4183	
PAGE: 1 OF 1	

STANDARD DETAIL
SOLAR POWERED STOCK WATERING SYSTEM

RIO VERDE ENGINEERING
(307) 367-2826
FAX# (307)-367-2546
PINEDALE, WYOMING

NEW FORK RIVER WATERSHED STUDY LEVEL I

Owner/Operator: Murdock Ranch
Project Type: Irrigation
Project ID: 51 - 57
Project Name: Glover Field Diversion Structures
Location (PLSS): Sec. 12, T.34N., R.110W.
Location (Lat/Long): 42.93828°, 109.92053°

PROJECT COMPONENTS - ITEMIZED COSTS

ITEM No.	DESCRIPTION	QUANTITY	UNIT	UNIT COST	TOTAL COST
1	Mobilization	1	LS	$ 500.00	$ 500.00
2	Bonds	1	LS	$ 200.00	$ 200.00
3	24"x36" Check Strucutre (Conc.)	3	EA	$ 1,300.00	$ 3,900.00
4	12" Dia. Distributing Gate	5	EA	$ 450.00	$ 2,250.00
				TOTAL COMPONENT COST (SUBTOTAL #2):	$ 6,850.00

PREPARATION OF FINAL DESIGNS & SPECIFICATIONS:	$ 300.00
PERMITTING AND MITIGATION:	$ 200.00
LEGAL FEES:	$ -
ACQUISTION OF ACCESS AND RIGHTS-OF-WAY:	$ -
PRE-CONSTRUCTION COSTS (**SUBTOTAL #1**):	$ 500.00
TOTAL COMPONENT COST **(SUBTOTAL #2**):	$ 6,850.00
CONSTRUCTION ENGINEERING COST (SUBTOTAL #2 x 10%):	$ 685.00
COMPONENTS AND ENGINEERING COSTS (**SUBTOTAL #3**):	$ 7,535.00
CONTINGENCY (SUBTOTAL #3 X 15%):	$ 1,130.25
TOTAL CONSTRUCTION COST (**SUBTOTAL #4**):	$ 8,665.25
TOTAL PROJECT COST (**SUBTOTAL #1 + SUBTOTAL #4**):	**$ 9,165.25**

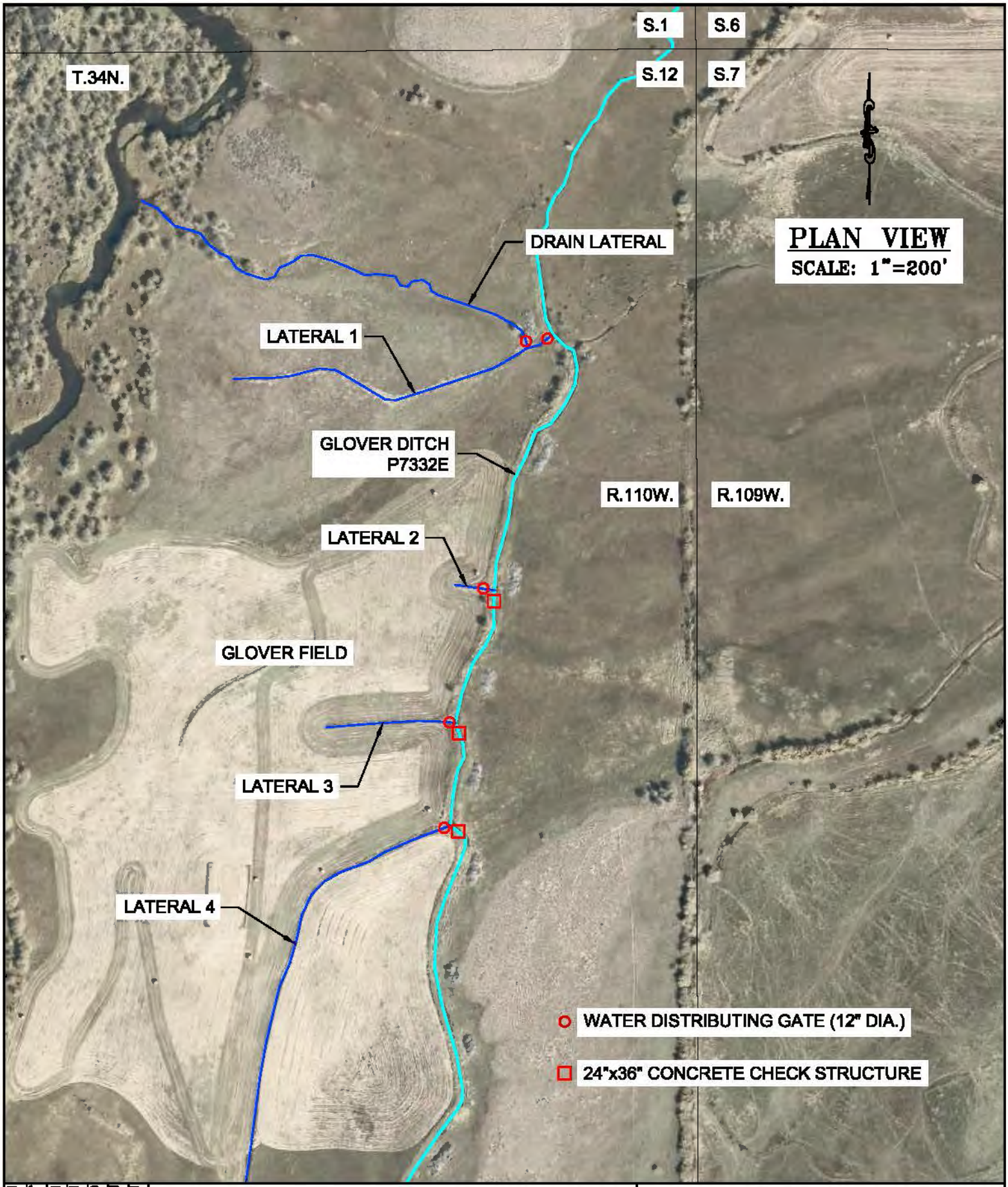

DESIGNED BY: MTJ
DRAWN BY: MTJ
CHECKED BY: MCE
DATE: 7/17/17
REV:
JOB NO: 4183
PAGE: 1 OF 1

WWDC–NEW FORK RIVER WATERSHED
MASTER PLAN–LEVEL I STUDY
MURDOCK RANCH (GLOVER FIELD DIVERSION STRUCTURES)
LOCATED IN SECTION 12, T.34N., R.110W.,
SUBLETTE COUNTY, WY

RIO VERDE ENGINEERING
(307) 367-2828
FAX# (307)-367-2546
PINEDALE, WYOMING

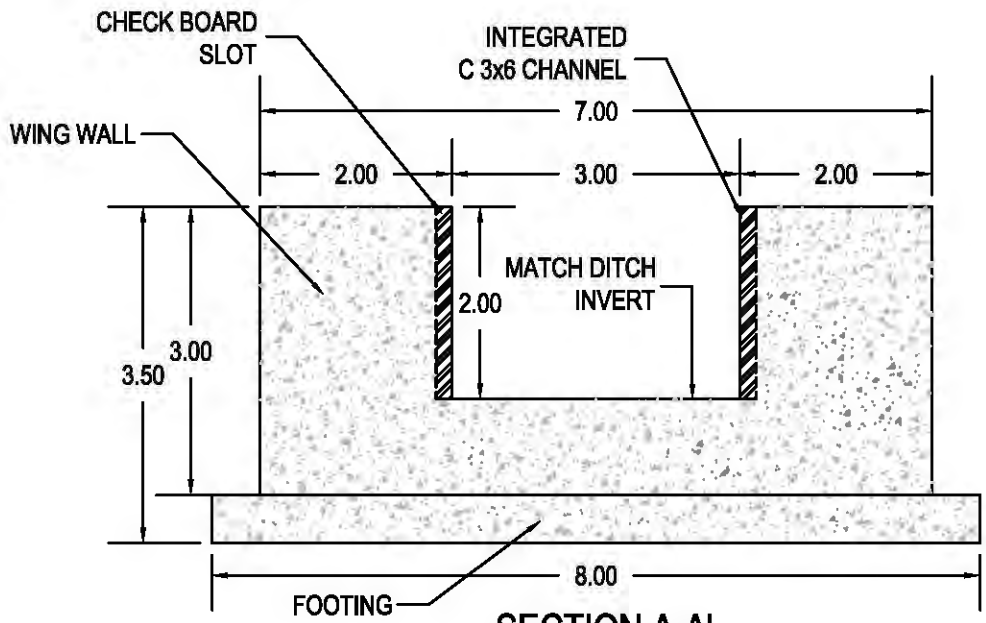

SECTION A-A'

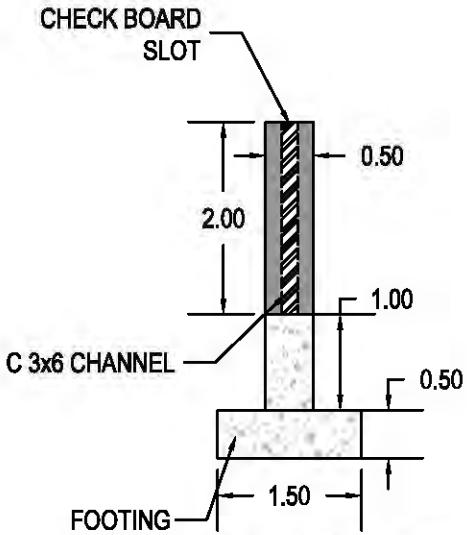

SECTION B-B'

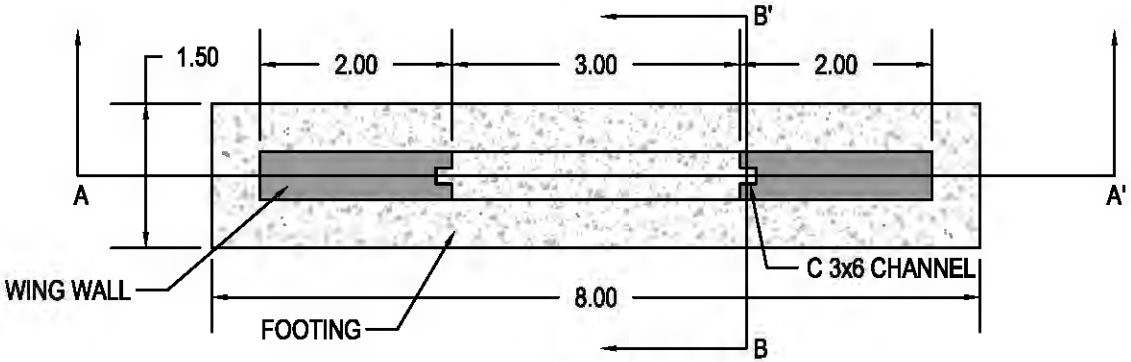

PLAN VIEW

TOTAL CONCRETE VOLUME: 0.5 CY

SCALE: 1"=2'

WWDC–NEW FORK RIVER WATERSHED
MASTER PLAN–LEVEL I STUDY
TYPICAL 24"x36" CHECK STRUCTURE DETAIL

RIO VERDE ENGINEERING
(307) 367-2828
FAX: (307)-367-2546
PINEDALE, WYOMING

DESIGNED BY: MTJ
DRAWN BY: MTJ
CHECKED BY: MCE
DATE: 7/17/17
REV:
JOB NO: 4183
PAGE: 1 OF 1

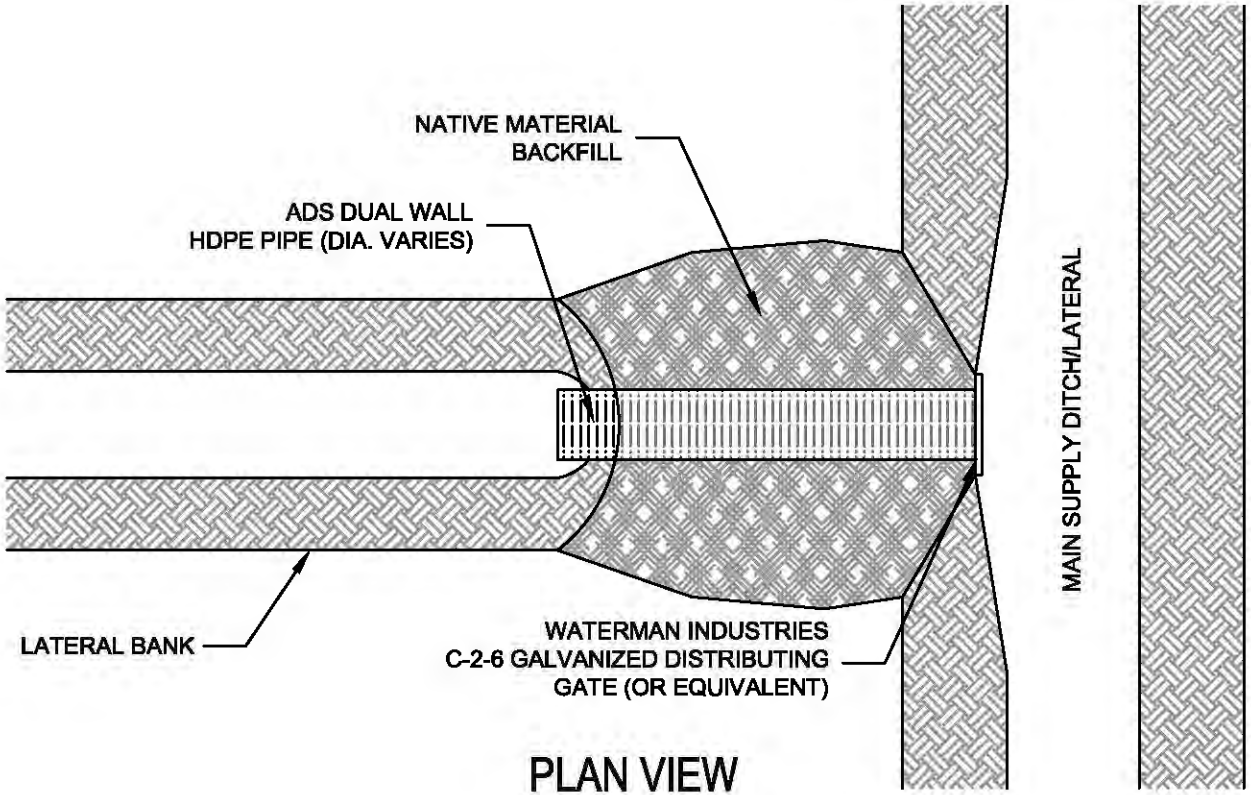

PLAN VIEW

N.T.S.

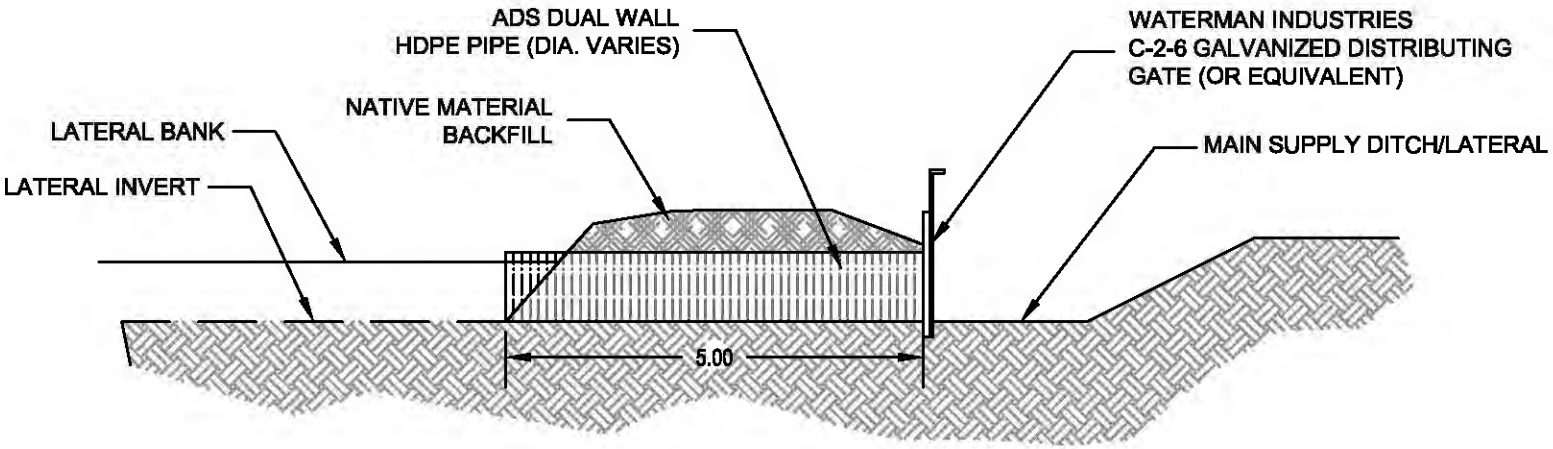

PROFILE VIEW

N.T.S.

STANDARD DETAIL

WATER

DISTRIBUTING GATE

RIO VERDE ENGINEERING
PINEDALE, WYOMING
(307) 367-2828
FAX# (307)-367-2548

DESIGNED BY:
DRAWN BY: MTJ
CHECKED BY: MCE
DATE: 6/05/17
REV:
JOB NO: 4183
PAGE: 1 OF 1

NEW FORK RIVER WATERSHED STUDY LEVEL I

Owner/Operator: Murdock Ranch
Project Type: Irrigation
Project ID: 58
Project Name: Coleman Field Diversion Structures
Location (PLSS): Sec. 7, T.34N., R.109W.
Location (Lat/Long): 42.92861°, 109.91639°

PROJECT COMPONENTS - ITEMIZED COSTS

ITEM No.	DESCRIPTION	QUANTITY	UNIT	UNIT COST	TOTAL COST
1	Mobilization	1	LS	$ 300.00	$ 300.00
2	Bonds	1	LS	$ 100.00	$ 100.00
3	18"x24" Check Structure (Conc.)	1	EA	$ 1,100.00	$ 1,100.00
4	14" Dia. Distributing Gate	1	EA	$ 500.00	$ 500.00
				TOTAL COMPONENT COST (SUBTOTAL #2):	$ 2,000.00

PREPARATION OF FINAL DESIGNS & SPECIFICATIONS:	$ 300.00
PERMITTING AND MITIGATION:	$ 200.00
LEGAL FEES:	$ -
ACQUISTION OF ACCESS AND RIGHTS-OF-WAY:	$ -
PRE-CONSTRUCTION COSTS (**SUBTOTAL #1**):	$ 500.00
TOTAL COMPONENT COST **(SUBTOTAL #2**):	$ 2,000.00
CONSTRUCTION ENGINEERING COST (SUBTOTAL #2 x 10%):	$ 200.00
COMPONENTS AND ENGINEERING COSTS (**SUBTOTAL #3**):	$ 2,200.00
CONTINGENCY (SUBTOTAL #3 X 15%):	$ 330.00
TOTAL CONSTRUCTION COST (**SUBTOTAL #4**):	$ 2,530.00
TOTAL PROJECT COST (**SUBTOTAL #1 + SUBTOTAL #4**):	**$ 3,030.00**

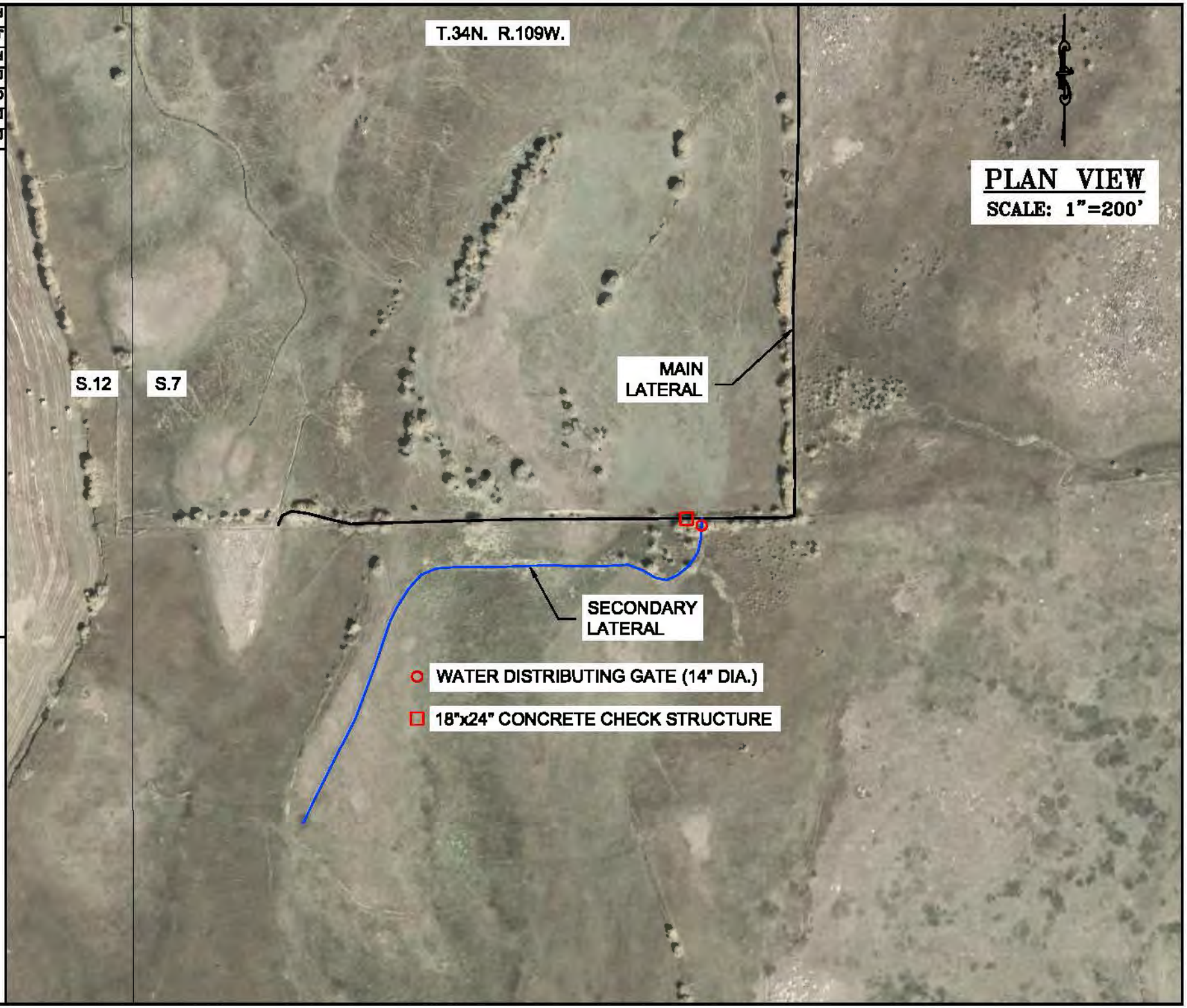

WWDC–NEW FORK RIVER WATERSHED
MASTER PLAN–LEVEL I STUDY

MURDOCK RANCH (COLEMAN FIELD DIVERSION STRUCTURES)
LOCATED IN SECTION 7, T.34N., R.109W.,
SUBLETTE COUNTY, WY

DESIGNED BY: MTJ
DRAWN BY: MTJ
CHECKED BY: MCE
DATE: 7/17/17
REV:
JOB NO: 4183
PAGE: 1 OF 1

RIO VERDE ENGINEERING
(307) 367-2829
FAX: (307)-367-2848
PINEDALE, WYOMING

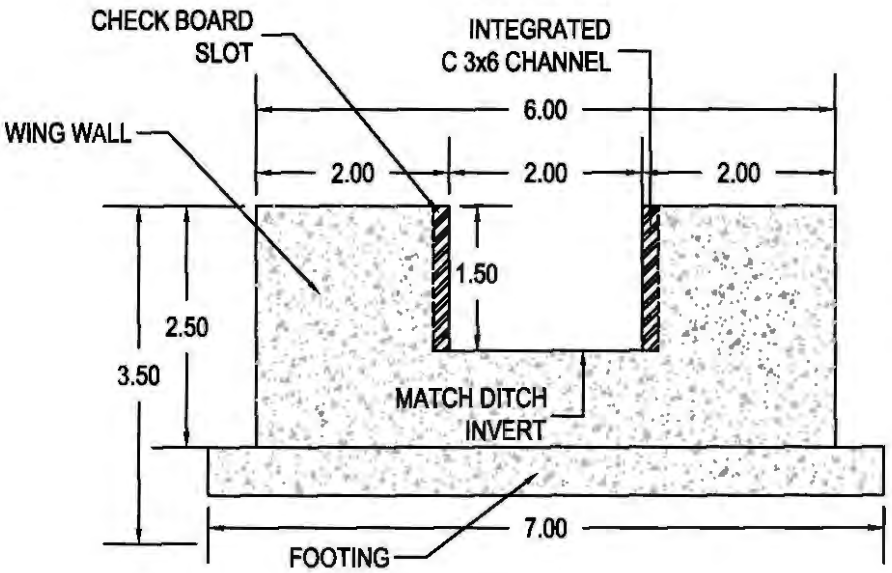

SECTION A-A'

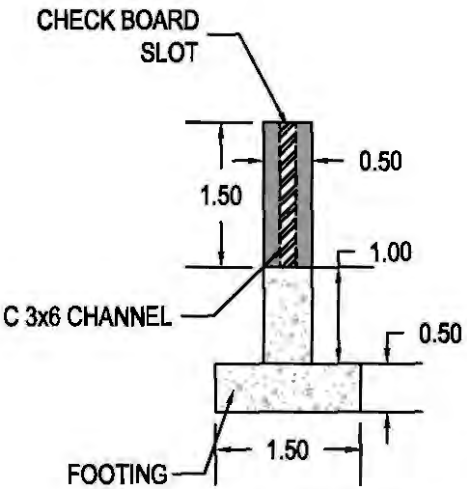

SECTION B-B'

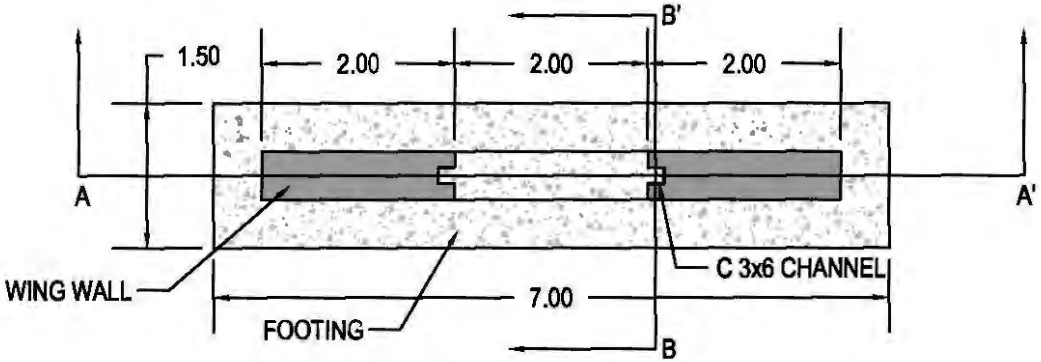

PLAN VIEW

TOTAL CONCRETE VOLUME: 0.42 CY

SCALE: 1"=2'

WWDC–NEW FORK RIVER WATERSHED
MASTER PLAN–LEVEL I STUDY
TYPICAL 18"x24" CHECK STRUCTURE DETAIL

DESIGNED BY: MTJ
DRAWN BY: MTJ
CHECKED BY: MCE
DATE: 7/17/17
REV:
JOB NO: 4183
PAGE: 1 OF 1

RIO VERDE ENGINEERING
(307) 367-2828
FAX# (307)-367-2548
PINEDALE, WYOMING

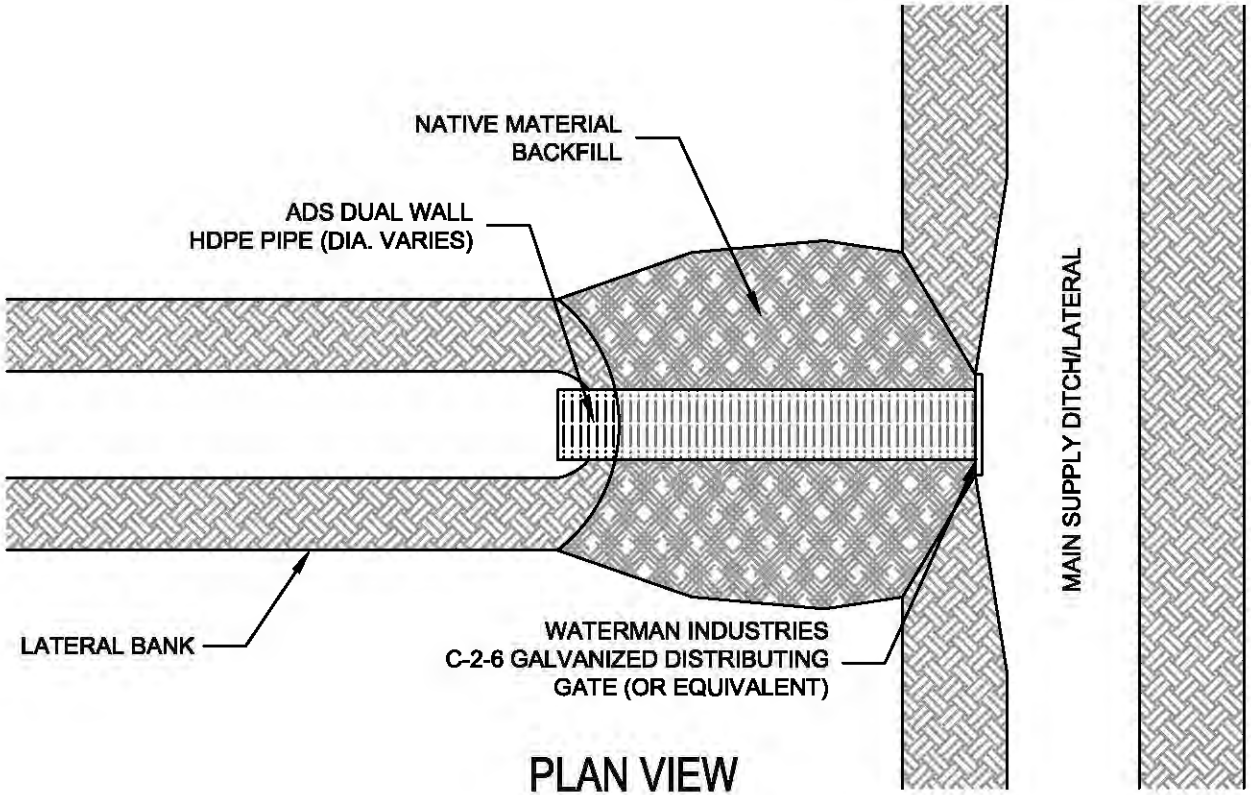

PLAN VIEW

N.T.S.

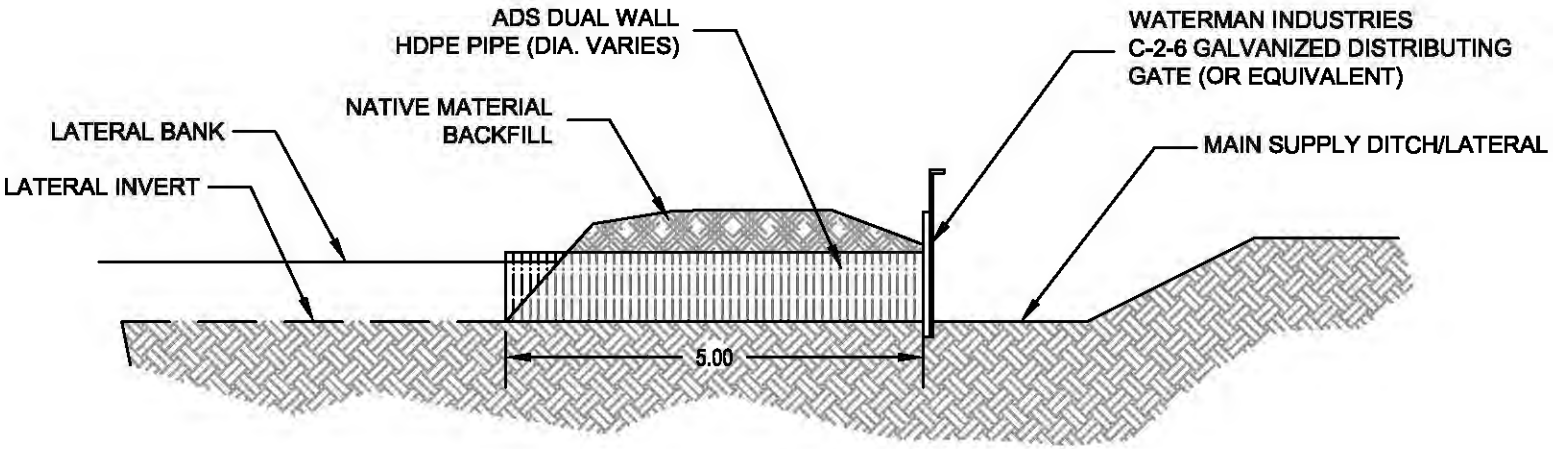

PROFILE VIEW

N.T.S.

STANDARD DETAIL

WATER

DISTRIBUTING GATE

RIO VERDE ENGINEERING
PINEDALE, WYOMING
(307) 367-2828
FAX# (307)-367-2548

DESIGNED BY:
DRAWN BY: MTJ
CHECKED BY: MCE
DATE: 6/05/17
REV:
JOB NO: 4183
PAGE: 1 OF 1

NEW FORK RIVER WATERSHED STUDY LEVEL I

Owner/Operator: Murdock Ranch
Project Type: Irrigation
Project ID: 59
Project Name: Island Ditch Waste Way Structure
Location (PLSS): Sec. 12, T.34N., R.110W.
Location (Lat/Long): 42.92511°, 109.92212°

PROJECT COMPONENTS - ITEMIZED COSTS

ITEM No.	DESCRIPTION	QUANTITY	UNIT	UNIT COST	TOTAL COST
1	Mobilization	1	LS	$ 1,200.00	$ 1,200.00
2	Bonds	1	LS	$ 300.00	$ 300.00
3	Misc. Excavation & Placement	20	CY	$ 22.00	$ 440.00
4	Headgate (Concrete)	1	LS	$ 6,500.00	$ 6,500.00
5	Steel Grate Walk Way (3'x6.5')	1	EA	$ 350.00	$ 350.00
6	60"x36" Steel Screw Gate	1	EA	$ 4,800.00	$ 4,800.00
7	24" Slide Gate (Galvanized)	1	EA	$ 850.00	$ 850.00
8	24" ADS N-12 Pipe	15	LF	$ 52.00	$ 780.00
9	Rip-Rap	10	CY	$ 42.00	$ 420.00
				TOTAL COMPONENT COST (SUBTOTAL #2):	$ 15,640.00

PREPARATION OF FINAL DESIGNS & SPECIFICATIONS:	$ 800.00
PERMITTING AND MITIGATION:	$ 300.00
LEGAL FEES:	$ -
ACQUISTION OF ACCESS AND RIGHTS-OF-WAY:	$ -
PRE-CONSTRUCTION COSTS (**SUBTOTAL #1**):	$ 1,100.00
TOTAL COMPONENT COST **(SUBTOTAL #2**):	$ 15,640.00
CONSTRUCTION ENGINEERING COST (SUBTOTAL #2 x 10%):	$ 1,564.00
COMPONENTS AND ENGINEERING COSTS (**SUBTOTAL #3**):	$ 17,204.00
CONTINGENCY (SUBTOTAL #3 X 15%):	$ 2,580.60
TOTAL CONSTRUCTION COST (**SUBTOTAL #4**):	$ 19,784.60
TOTAL PROJECT COST (**SUBTOTAL #1 + SUBTOTAL #4**):	**$ 20,884.60**

PLAN VIEW
SCALE: 1"=50'

WWDC-NEW FORK RIVER WATERSHED
MASTER PLAN-LEVEL I STUDY
MURDOCK RANCH (ISLAND DITCH WASTE WAY STRUCTURE)
LOCATED IN SECTION 12, T.34N., R.110W.,
SUBLETTE COUNTY, WY

DESIGNED BY: MTJ
DRAWN BY: MTJ
CHECKED BY: MCE
DATE: 7/17/17
REV:
JOB NO: 4183
PAGE: 1 OF 2

RIO VERDE
ENGINEERING
(307) 367-2828
FAX (307)-367-2548
PINEDALE, WYOMING

SCALE: 1"=4'

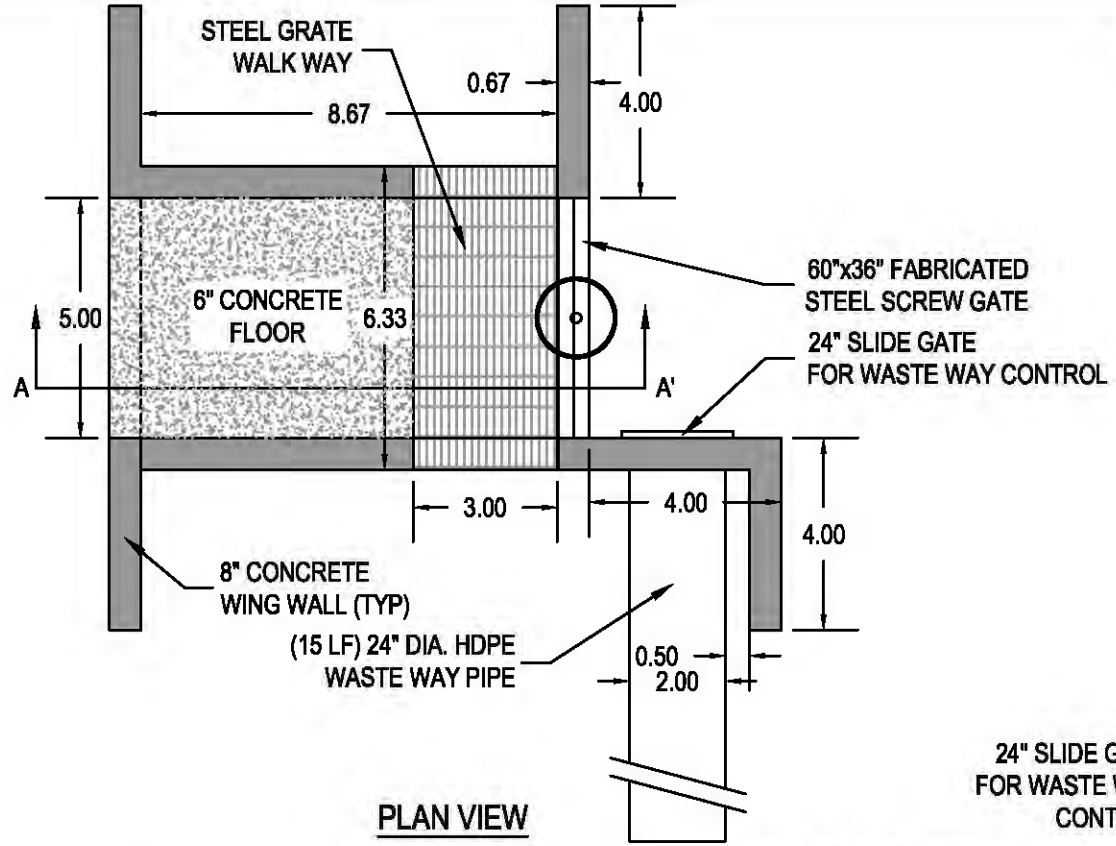

TOTAL CONCRETE
VOLUME: 6.6 CY

PLAN VIEW

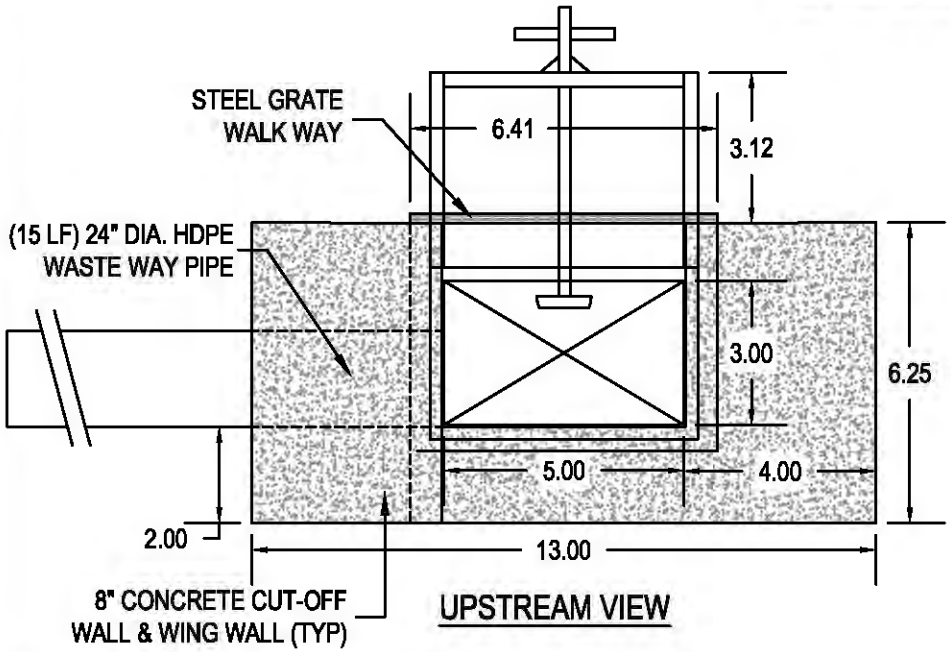

UPSTREAM VIEW

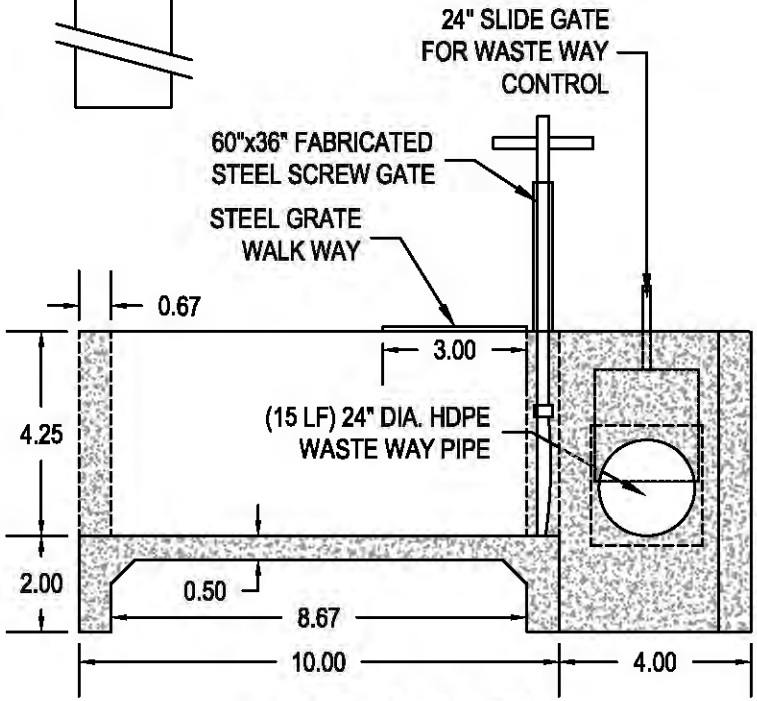

PROFILE VIEW A-A'

WWDC–NEW FORK RIVER WATERSHED
MASTER PLAN–LEVEL I STUDY
MURDOCK RANCH (ISLAND DITCH WASTEWAY)
LOCATED IN SECTION 12, T.34N., R.110W.,
SUBLETTE COUNTY, WY

RIO VERDE ENGINEERING
(307) 367-2826
FAX# (307)-367-2548
PINEDALE, WYOMING

DESIGNED BY: MTJ
DRAWN BY: MTJ
CHECKED BY: MCE
DATE: 7/07/17
REV:
JOB NO: 4183
PAGE: 2 OF 2

NEW FORK RIVER WATERSHED STUDY LEVEL I

Owner/Operator: Murdock Ranch
Project Type: Irrigation
Project ID: 60
Project Name: Willow Creek Rock Check
Location (PLSS): Sec. 18, T.34N., R.109W.
Location (Lat/Long): 42.91919°, 109.91917°

PROJECT COMPONENTS - ITEMIZED COSTS

ITEM No.	DESCRIPTION	QUANTITY	UNIT	UNIT COST	TOTAL COST
1	Mobilization	1	LS	$ 400.00	$ 400.00
2	Bonds	1	LS	$ 200.00	$ 200.00
3	Rock Vein	35	CY	$ 45.00	$ 1,575.00
4	Misc. Excavation	15	CY	$ 22.00	$ 330.00
				TOTAL COMPONENT COST (SUBTOTAL #2):	$ 2,505.00

PREPARATION OF FINAL DESIGNS & SPECIFICATIONS:	$ 800.00
PERMITTING AND MITIGATION:	$ 300.00
LEGAL FEES:	$ -
ACQUISTION OF ACCESS AND RIGHTS-OF-WAY:	$ -
PRE-CONSTRUCTION COSTS (**SUBTOTAL #1**):	$ 1,100.00
TOTAL COMPONENT COST **(SUBTOTAL #2**):	$ 2,505.00
CONSTRUCTION ENGINEERING COST (SUBTOTAL #2 x 10%):	$ 250.50
COMPONENTS AND ENGINEERING COSTS (**SUBTOTAL #3**):	$ 2,755.50
CONTINGENCY (SUBTOTAL #3 X 15%):	$ 413.33
TOTAL CONSTRUCTION COST (**SUBTOTAL #4**):	$ 3,168.83
TOTAL PROJECT COST (**SUBTOTAL #1 + SUBTOTAL #4**):	**$ 4,268.83**

PLAN VIEW
SCALE: 1"=50'

WWDC–NEW FORK RIVER WATERSHED
MASTER PLAN–LEVEL I STUDY
MURDOCK RANCH (WILLOW CREEK ROCK CHECK)
LOCATED IN SECTION 18, T.34N., R.109W.,
SUBLETTE COUNTY, WY

DESIGNED BY: MTJ
DRAWN BY: MTJ
CHECKED BY: MCE
DATE: 7/17/17
REV:
JOB NO: 4183
PAGE: 1 OF 2

RIO VERDE ENGINEERING
(307) 367-2828
FAX (307)-367-2546
PINEDALE, WYOMING

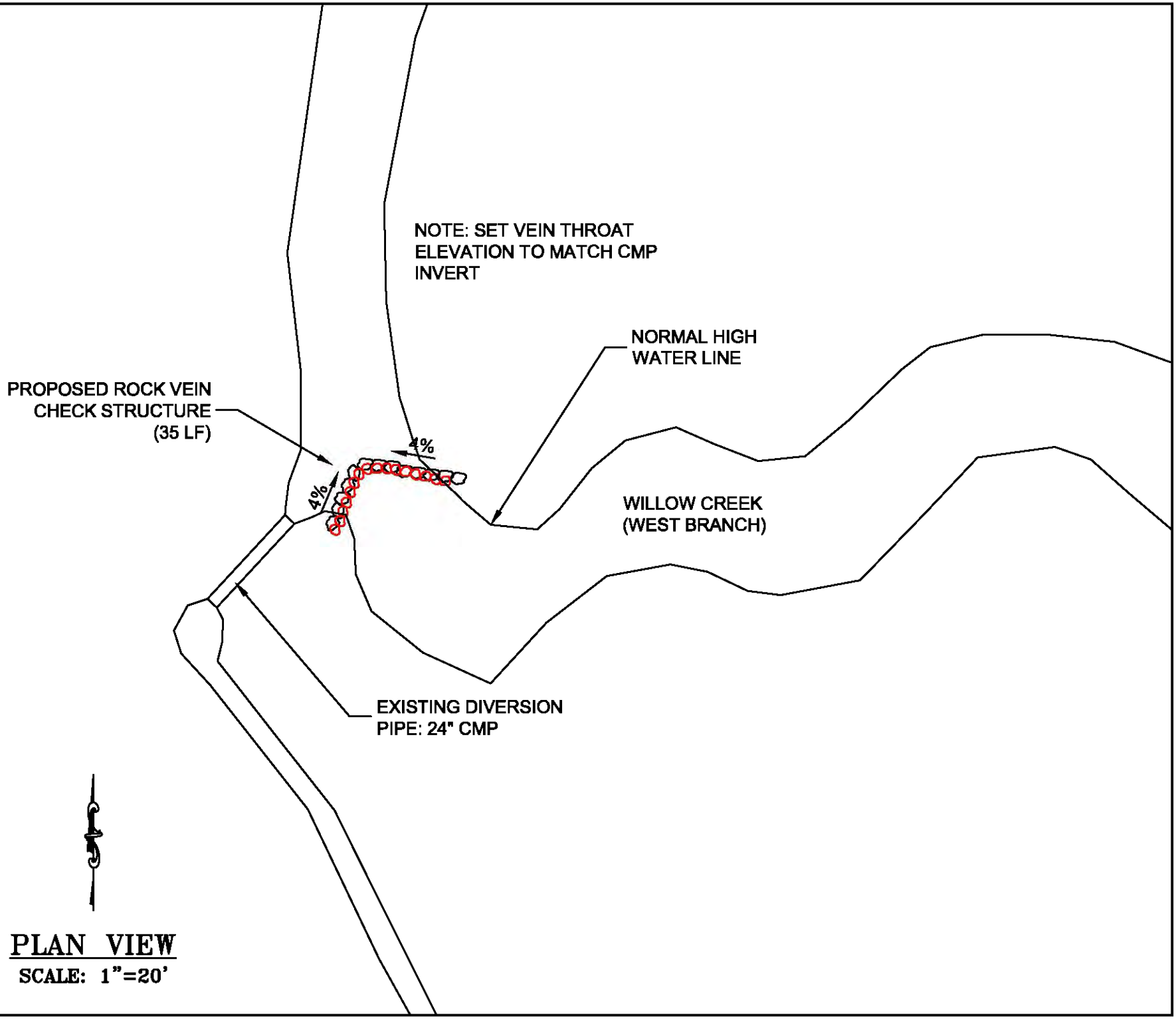

PLAN VIEW

SCALE: 1"=20'

WWDC–NEW FORK RIVER WATERSHED

MASTER PLAN–LEVEL I STUDY

MURDOCK RANCH (WILLOW CREEK ROCK CHECK)
LOCATED IN SECTION 18, T.34N., R.109W.,
SUBLETTE COUNTY, WY

RIO VERDE ENGINEERING
(307) 367-2826
FAX# (307)-367-2848
PINEDALE, WYOMING

DESIGNED BY: MTJ
DRAWN BY: MTJ
CHECKED BY: MCE
DATE: 7/17/17
REV:
JOB NO: 4183
PAGE: 2 OF 2

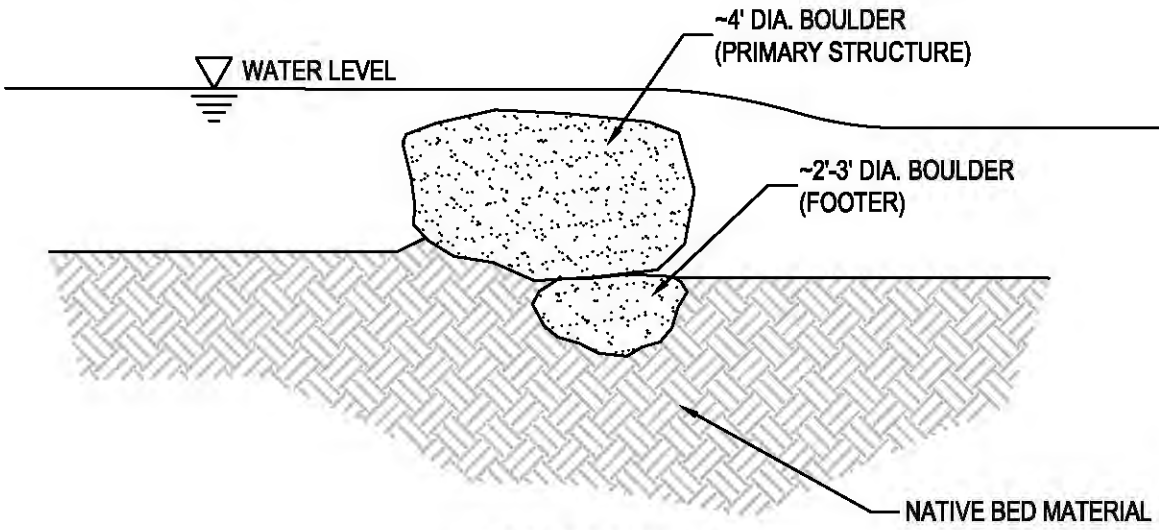

X-SECTION VIEW
N.T.S.

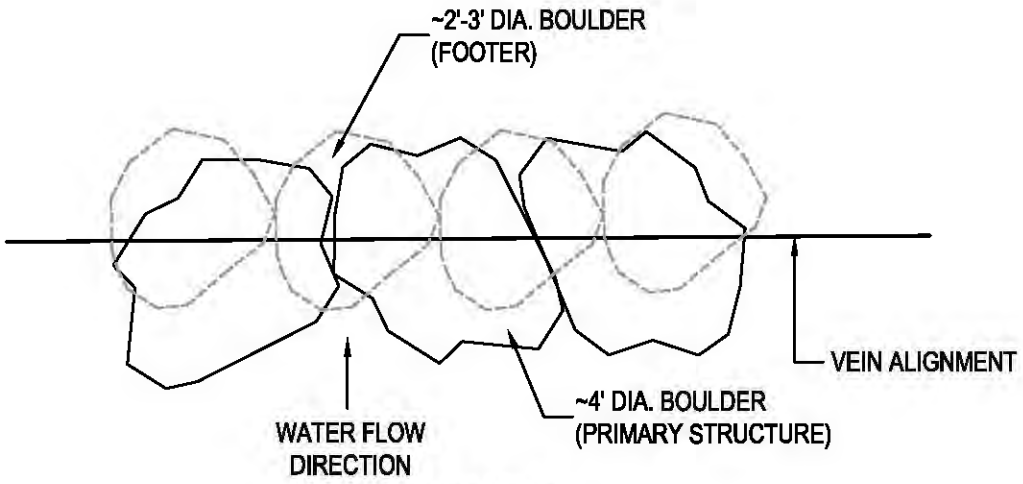

PLAN VIEW
N.T.S.

DESIGNED BY:	
DRAWN BY: MTJ	
CHECKED BY: MCE	
DATE: 7/07/17	
REV:	
JOB NO: 4183	
PAGE: 1 OF 1	

STANDARD DETAIL
ROCK VEIN
CONSTRUCTION

RIO VERDE ENGINEERING
(307) 367-2828
FAX# (307)-367-2546
PINEDALE, WYOMING

NEW FORK RIVER WATERSHED STUDY LEVEL I

Owner/Operator: Murdock Ranch
Project Type: Irrigation
Project ID: 61
Project Name: 2-Way Check Strucure
Location (PLSS): Sec. 19, T.34N., R.109W.
Location (Lat/Long): 42.90785°, 109.91446°

PROJECT COMPONENTS - ITEMIZED COSTS

ITEM No.	DESCRIPTION	QUANTITY	UNIT	UNIT COST	TOTAL COST
1	Mobilization	1	LS	$ 300.00	$ 300.00
2	Bonds	1	LS	$ 100.00	$ 100.00
3	18"x24" 2-Way Check Structure (Conc.)	1	LS	$ 1,800.00	$ 1,800.00
4	Misc. Excavation	15	CY	$ 22.00	$ 330.00
				TOTAL COMPONENT COST (SUBTOTAL #2):	$ 2,530.00

PREPARATION OF FINAL DESIGNS & SPECIFICATIONS:	$ 300.00
PERMITTING AND MITIGATION:	$ 200.00
LEGAL FEES:	$ -
ACQUISTION OF ACCESS AND RIGHTS-OF-WAY:	$ -
PRE-CONSTRUCTION COSTS (**SUBTOTAL #1**):	$ 500.00
TOTAL COMPONENT COST **(SUBTOTAL #2**):	$ 2,530.00
CONSTRUCTION ENGINEERING COST (SUBTOTAL #2 x 10%):	$ 253.00
COMPONENTS AND ENGINEERING COSTS (**SUBTOTAL #3**):	$ 2,783.00
CONTINGENCY (SUBTOTAL #3 X 15%):	$ 417.45
TOTAL CONSTRUCTION COST (**SUBTOTAL #4**):	$ 3,200.45
TOTAL PROJECT COST (**SUBTOTAL #1 + SUBTOTAL #4**):	**$ 3,700.45**

DESIGNED BY: MTJ
DRAWN BY: MTJ
CHECKED BY: MCE
DATE: 7/17/17
REV:
JOB NO: 4183
PAGE: 1 OF 2

WWDC–NEW FORK RIVER WATERSHED MASTER PLAN–LEVEL I STUDY

MURDOCK RANCH (2–WAY CHECK STRUCTURE)
LOCATED IN SECTION 19, T.34N., R.109W.,
SUBLETTE COUNTY, WY

RIO VERDE ENGINEERING
(307) 367–2820
FAX# (307)–367–2548
PINEDALE, WYOMING

TOTAL CONCRETE
VOLUME: 0.70 CY

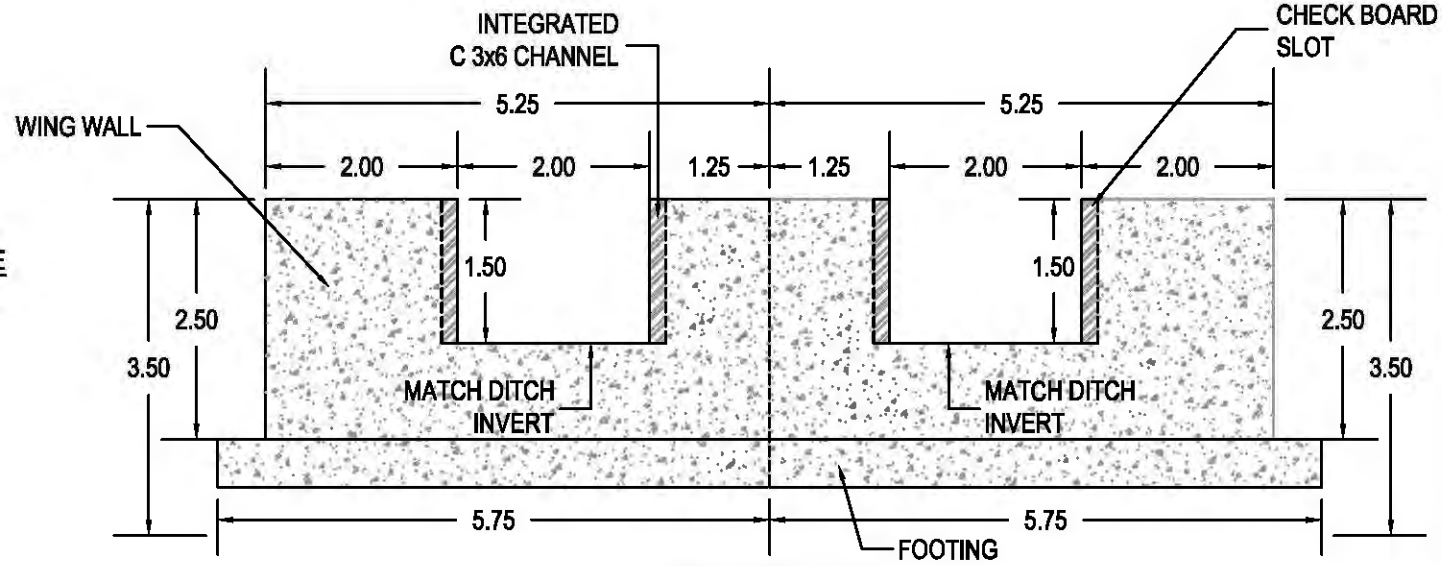

SECTION A-A'

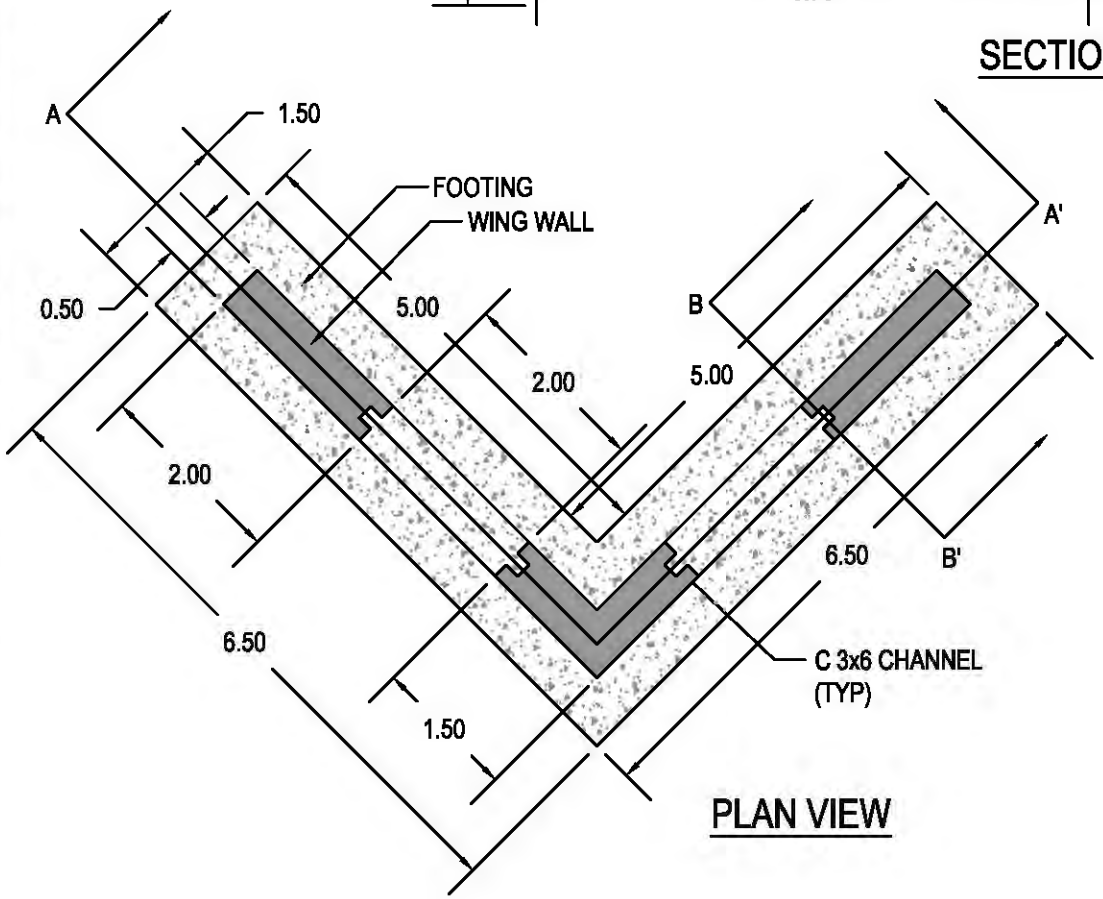

PLAN VIEW

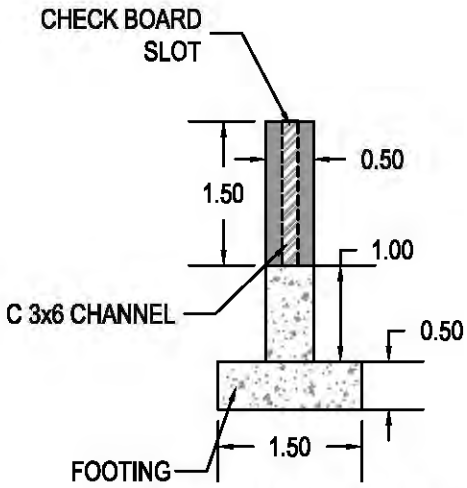

SECTION B-B'

SCALE: 1"=2'

WWDC-NEW FORK RIVER WATERSHED
MASTER PLAN-LEVEL I STUDY
MURDOCK RANCH (2-WAY CHECK STRUCTURE)
LOCATED IN SECTION 18, T.34N., R.109W.,
SUBLETTE COUNTY, WY

RIO VERDE
ENGINEERING
PINEDALE, WYOMING
(307) 367-2828
FAX# (307)-367-2546

DESIGNED BY: MTJ
DRAWN BY: MTJ
CHECKED BY: MCE
DATE: 7/17/17
REV:
JOB NO: 4183
PAGE: 2 OF 2

PROJECT STAKEHOLDER

NOBLE FAMILY CLOSE, LLC

NEW FORK RIVER WATERSHED STUDY LEVEL I

Owner/Operator: Noble Family Close, LLC
Project Type: Small Water Storage
Project ID: 32, 33, 34, & 35
Project Name: Martin, Valerie, Susan, & Annette Reservoirs
Location (PLSS): Sec. 21, T.36N., R.110W.
Location (Lat/Long): 43.078207°, 109.989691°

PROJECT COMPONENTS - ITEMIZED COSTS

ITEM No.	DESCRIPTION	QUANTITY	UNIT	UNIT COST	TOTAL COST
1	Mobilization	1	LS	$ 4,200.00	$ 4,200.00
2	Bonds	1	LS	$ 800.00	$ 800.00
3	Topsoil Stripping & Placement	2665	SY	$ 3.00	$ 7,995.00
4	Dam Embankment (Ex. & Placement)	3645	CY	$ 10.00	$ 36,450.00
				TOTAL COMPONENT COST (SUBTOTAL #2):	$ 49,445.00

PREPARATION OF FINAL DESIGNS & SPECIFICATIONS:	$ 400.00
PERMITTING AND MITIGATION:	$ -
LEGAL FEES:	$ -
ACQUISTION OF ACCESS AND RIGHTS-OF-WAY:	$ -
PRE-CONSTRUCTION COSTS (**SUBTOTAL #1**):	$ 400.00
TOTAL COMPONENT COST **(SUBTOTAL #2**):	$ 49,445.00
CONSTRUCTION ENGINEERING COST (SUBTOTAL #2 x 10%):	$ 4,944.50
COMPONENTS AND ENGINEERING COSTS (**SUBTOTAL #3**):	$ 54,389.50
CONTINGENCY (SUBTOTAL #3 X 15%):	$ 8,158.43
TOTAL CONSTRUCTION COST (**SUBTOTAL #4**):	$ 62,547.93
TOTAL PROJECT COST (**SUBTOTAL #1 + SUBTOTAL #4**):	**$ 62,947.93**

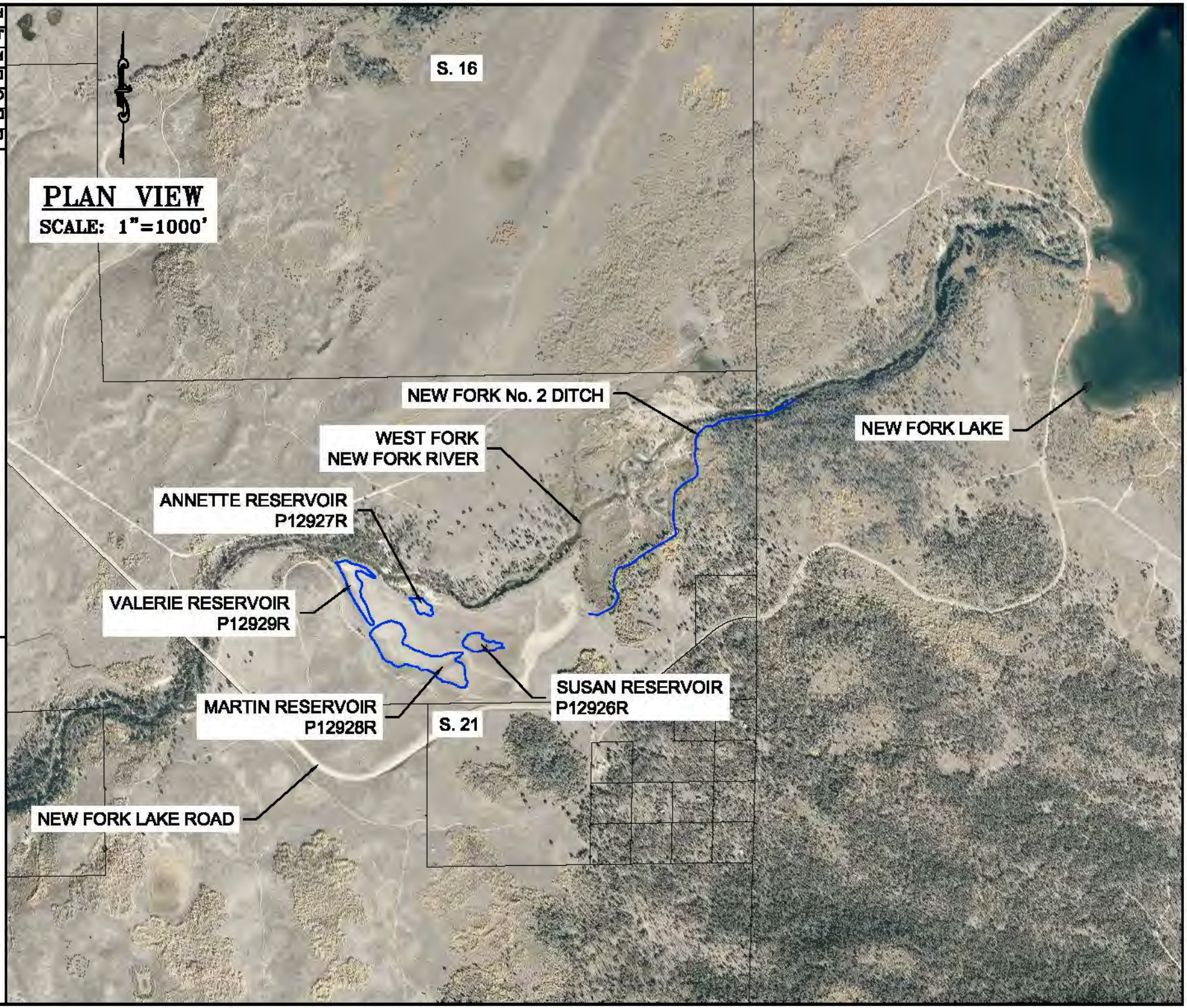

WWDC–NEW FORK RIVER WATERSHED

MASTER PLAN–LEVEL I STUDY

NOBLE FAMILY CLOSE, LLC (RESERVOIR CONSTRUCTION QUANTITIES) LOCATED IN SECTION 21, T.36N., R.110W., SUBLETTE COUNTY, WY

RIO VERDE ENGINEERING

(307) 367-2828
FAX# (307)-367-2548
PINEDALE, WYOMING

DESIGNED BY: MTJ
DRAWN BY: MTJ
CHECKED BY: MCE
DATE: 5/22/17
REV:
JOB NO: 4183
PAGE: 1 OF 2

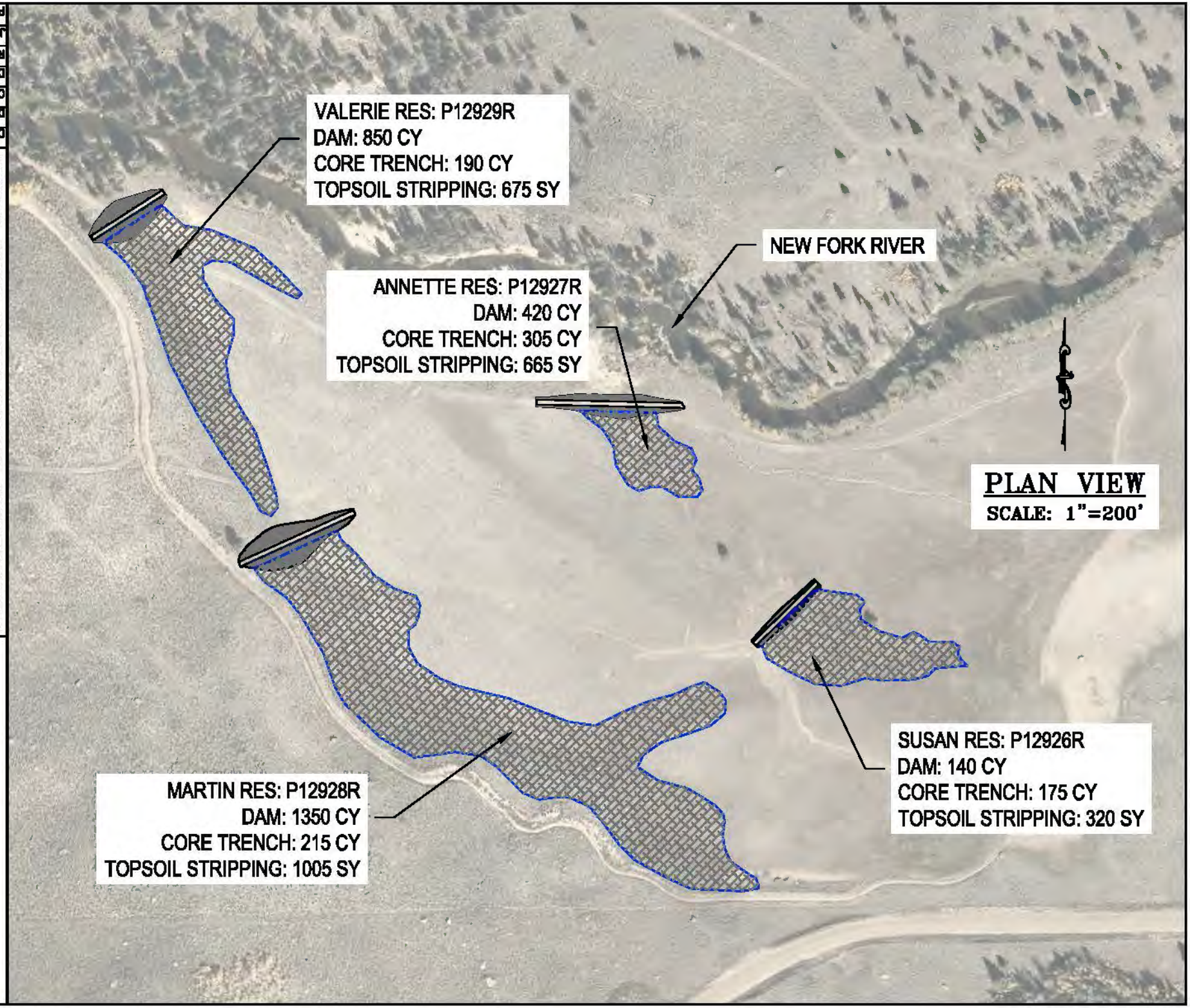

WWDC–NEW FORK RIVER WATERSHED
MASTER PLAN–LEVEL I STUDY
NOBLE FAMILY CLOSE, LLC (RESERVOIR CONSTRUCTION QUANTITIES) LOCATED IN SECTION 21, T.36N., R.110W., SUBLETTE COUNTY, WY

RIO VERDE ENGINEERING
(307) 367-2828
FAX: (307)-367-2546
PINEDALE, WYOMING

DESIGNED BY: MTJ
DRAWN BY: MTJ
CHECKED BY: MCE
DATE: 5/22/17
REV:
JOB NO: 4183
PAGE: 2 OF 2

NEW FORK RIVER WATERSHED STUDY LEVEL I

Owner/Operator: Noble Family Close, LLC
Project Type: Irrigation
Project ID: 36
Project Name: New Fork Ditch No. 2 Piping Project (Phase I)
Location (PLSS): Secs. 21 & 22, T.36N., R.110W.
Location (Lat/Long): 43.083577°, 109.978874°

PROJECT COMPONENTS - ITEMIZED COSTS

ITEM No.	DESCRIPTION	QUANTITY	UNIT	UNIT COST	TOTAL COST
1	Mobilization	1	LS	$ 2,300.00	$ 2,300.00
2	Bonds	1	LS	$ 800.00	$ 800.00
3	Integrate New Pipe into Headgate	1	LS	$ 1,300.00	$ 1,300.00
4	Install New 30" Screw Gate	1	EA	$ 2,300.00	$ 2,300.00
5	Install 30" ADS N-12 Pipe	1375	LF	$ 62.00	$ 85,250.00
6	8" Turn-Out	3	EA	$ 300.00	$ 900.00
				TOTAL COMPONENT COST (SUBTOTAL #2):	$ 92,850.00

PREPARATION OF FINAL DESIGNS & SPECIFICATIONS:	$ 1,200.00
PERMITTING AND MITIGATION:	$ 1,500.00
LEGAL FEES:	$ -
ACQUISTION OF ACCESS AND RIGHTS-OF-WAY:	$ 400.00
PRE-CONSTRUCTION COSTS (**SUBTOTAL #1**):	$ 3,100.00
TOTAL COMPONENT COST **(SUBTOTAL #2**):	$ 92,850.00
CONSTRUCTION ENGINEERING COST (SUBTOTAL #2 x 10%):	$ 9,285.00
COMPONENTS AND ENGINEERING COSTS (**SUBTOTAL #3**):	$ 102,135.00
CONTINGENCY (SUBTOTAL #3 X 15%):	$ 15,320.25
TOTAL CONSTRUCTION COST (**SUBTOTAL #4**):	$ 117,455.25
TOTAL PROJECT COST (**SUBTOTAL #1 + SUBTOTAL #4**):	**$ 120,555.25**

NEW FORK RIVER WATERSHED STUDY LEVEL I

Owner/Operator: Noble Family Close, LLC
Project Type: Irrigation
Project ID: 36
Project Name: New Fork Ditch No. 2 Piping Project (Phase II)
Location (PLSS): Secs. 21, T.36N., R.110W.
Location (Lat/Long): 43.083577°, 109.978874°

PROJECT COMPONENTS - ITEMIZED COSTS

ITEM No.	DESCRIPTION	QUANTITY	UNIT	UNIT COST	TOTAL COST
1	Mobilization	1	LS	$ 2,300.00	$ 2,300.00
2	Bonds	1	LS	$ 800.00	$ 800.00
3	Install 30" ADS N-12 Pipe	1433	LF	$ 62.00	$ 88,846.00
				TOTAL COMPONENT COST (SUBTOTAL #2):	$ 91,946.00

PREPARATION OF FINAL DESIGNS & SPECIFICATIONS:	$ 500.00
PERMITTING AND MITIGATION:	$ -
LEGAL FEES:	$ -
ACQUISTION OF ACCESS AND RIGHTS-OF-WAY:	$ -
PRE-CONSTRUCTION COSTS (**SUBTOTAL #1**):	$ 500.00
TOTAL COMPONENT COST **(SUBTOTAL #2**):	$ 91,946.00
CONSTRUCTION ENGINEERING COST (SUBTOTAL #2 x 10%):	$ 9,194.60
COMPONENTS AND ENGINEERING COSTS (**SUBTOTAL #3**):	$ 101,140.60
CONTINGENCY (SUBTOTAL #3 X 15%):	$ 15,171.09
TOTAL CONSTRUCTION COST (**SUBTOTAL #4**):	$ 116,311.69
TOTAL PROJECT COST (**SUBTOTAL #1 + SUBTOTAL #4**):	**$ 116,811.69**

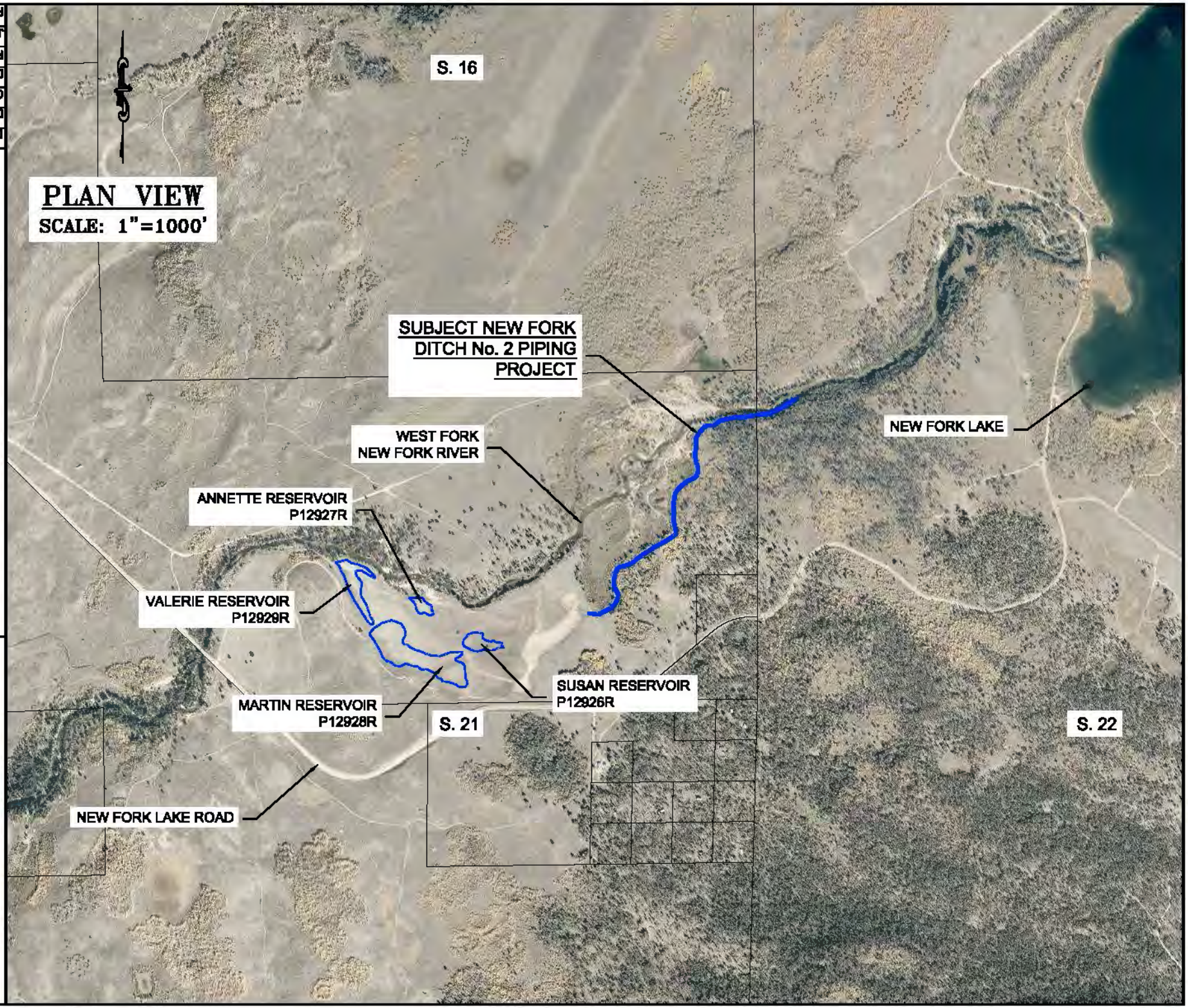

WWDC–NEW FORK RIVER WATERSHED
MASTER PLAN–LEVEL I STUDY
NOBLE FAMILY CLOSE, LLC (NEW FORK DITCH No. 2 PIPING PROJECT) LOCATED IN SECTION 21, T.36N., R.110W., SUBLETTE COUNTY, WY

RIO VERDE ENGINEERING
PINEDALE, WYOMING
(307) 367-2829
FAX# (307)-367-2548

DESIGNED BY: MTJ
DRAWN BY: MTJ
CHECKED BY: MCE
DATE: 5/22/17
REV:
JOB NO: 4183
PAGE: 1 OF 2

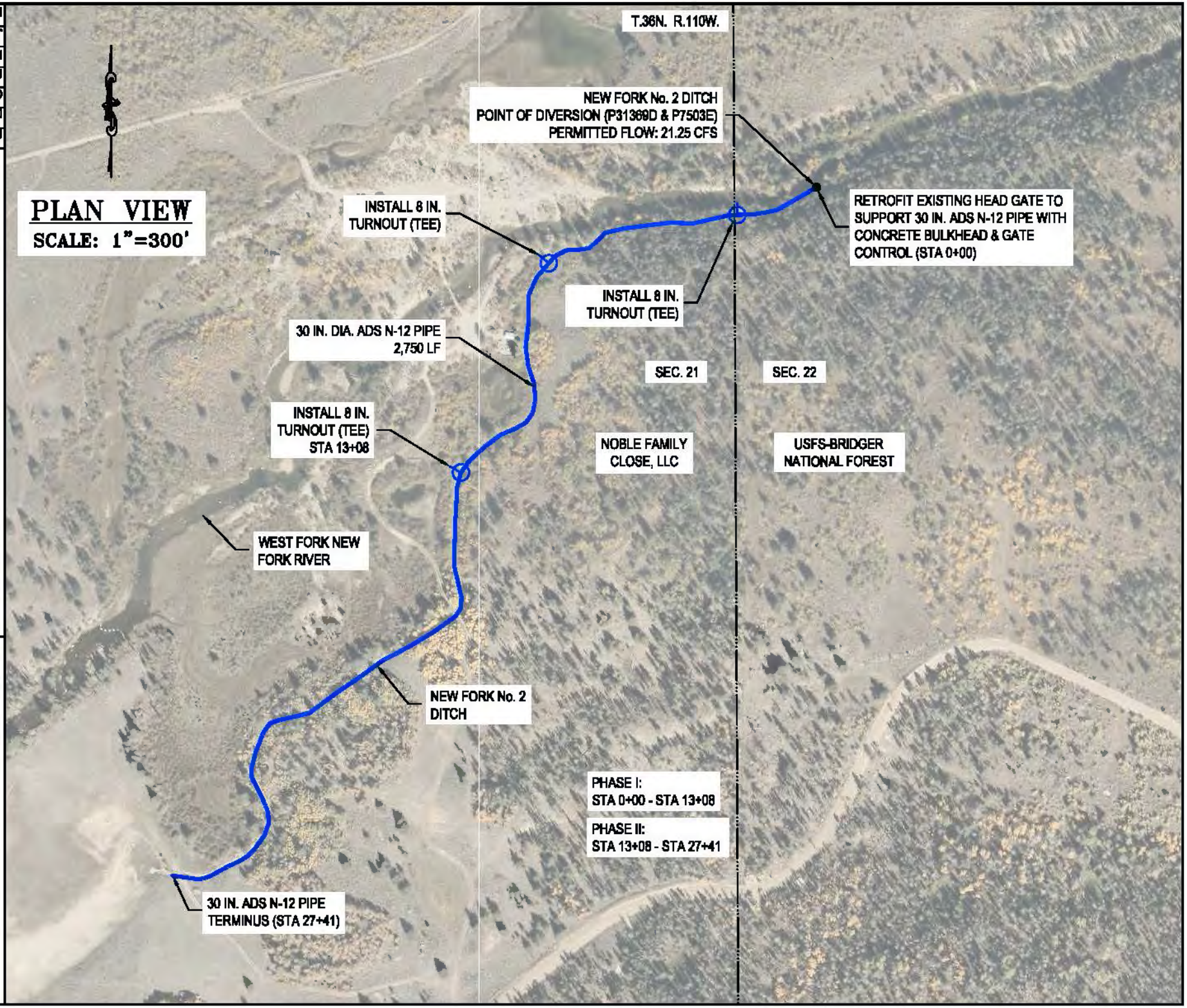

PLAN VIEW

SCALE: 1"=300'

WWDC–NEW FORK RIVER WATERSHED

MASTER PLAN–LEVEL I STUDY

NOBLE FAMILY CLOSE, LLC (NEW FORK DITCH No. 2 PIPING PROJECT) LOCATED IN SECTIONS 21 & 22, T.36N., R.110W., SUBLETTE COUNTY, WY

DESIGNED BY: MTJ
DRAWN BY: MTJ
CHECKED BY: MCE
DATE: 6/22/17
REV:
JOB NO: 4183
PAGE: 2 OF 2

RIO VERDE ENGINEERING
(307) 367-2826
FAX: (307)-367-2848
PINEDALE, WYOMING

NEW FORK RIVER WATERSHED STUDY LEVEL I

Owner/Operator: Noble Family Close, LLC
Project Type: Source Water Development
Project ID: 40
Project Name: McDowell Flats Stock Water Development Project
Location (PLSS): Sec. 10, T.36N., R.110W.
Location (Lat/Long): 43.109562°, 109.972634°

PROJECT COMPONENTS - ITEMIZED COSTS

ITEM No.	DESCRIPTION	QUANTITY	UNIT	UNIT COST	TOTAL COST
1	Mobilization	1	LS	$ 3,600.00	$ 3,600.00
2	Bonds	1	LS	$ 800.00	$ 800.00
3	Well Drilling	300	LF	$ 65.00	$ 19,500.00
4	Submersible Pump & Equipment	1	LS	$ 2,300.00	$ 2,300.00
5	Pump Test	1	LS	$ 3,500.00	$ 3,500.00
6	Solar Array (Complete)	1	LS	$ 4,600.00	$ 4,600.00
7	4-Rail Pole Fence	100	LF	$ 8.50	$ 850.00
8	2,000 Gal Tire Trough (Complete)	1	LS	$ 10,000.00	$ 10,000.00
9	1-1/4" SDR 11 Pipe	60	LF	$ 3.05	$ 183.00
10	4" SDR 11 Pipe	110	LF	$ 6.95	$ 764.50
				TOTAL COMPONENT COST (SUBTOTAL #2):	$ 46,097.50

PREPARATION OF FINAL DESIGNS & SPECIFICATIONS:	$ 1,800.00
PERMITTING AND MITIGATION:	$ 850.00
LEGAL FEES:	$ -
ACQUISTION OF ACCESS AND RIGHTS-OF-WAY:	$ -
PRE-CONSTRUCTION COSTS (**SUBTOTAL #1**):	$ 2,650.00
TOTAL COMPONENT COST (**SUBTOTAL #2**):	$ 46,097.50
CONSTRUCTION ENGINEERING COST (SUBTOTAL #2 x 10%):	$ 4,609.75
COMPONENTS AND ENGINEERING COSTS (**SUBTOTAL #3**):	$ 50,707.25
CONTINGENCY (SUBTOTAL #3 X 15%):	$ 7,606.09
TOTAL CONSTRUCTION COST (**SUBTOTAL #4**):	$ 58,313.34
TOTAL PROJECT COST (**SUBTOTAL #1 + SUBTOTAL #4**):	**$ 60,963.34**

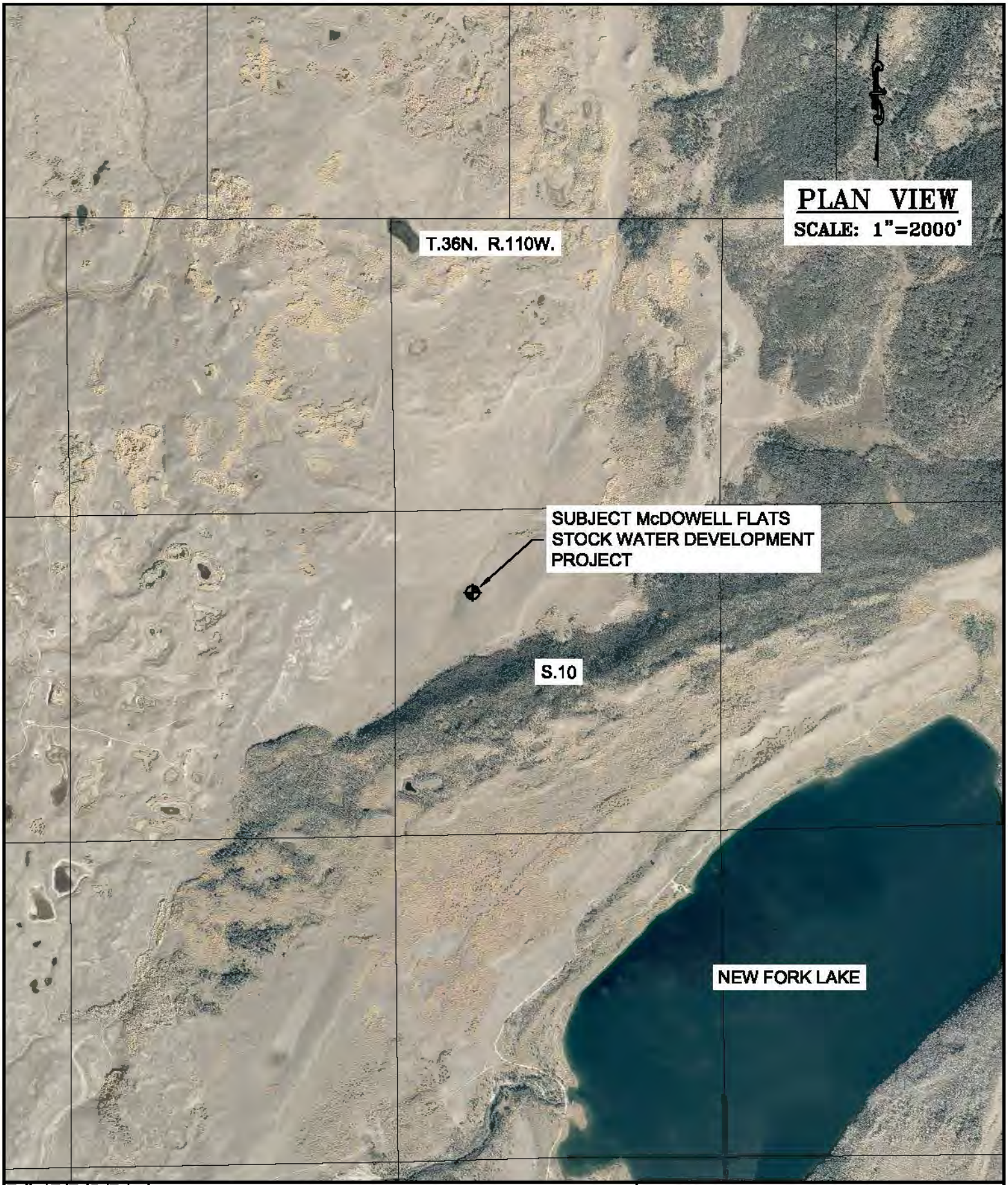

WWDC–NEW FORK RIVER WATERSHED MASTER PLAN–LEVEL I STUDY

NOBLE FAMILY CLOSE, LLC (McDOWELL FLATS STOCK WATER DEVELOPMENT PROJECT) LOCATED IN SECTION 10, T.36N., R.110W., SUBLETTE COUNTY, WY

DESIGNED BY: MTJ
DRAWN BY: MTJ
CHECKED BY: MCE
DATE: 7/05/17
REV:
JOB NO: 4183
PAGE: 1 OF 2

RIO VERDE ENGINEERING
(307) 367-2826
FAX# (307)-367-2546
PINEDALE, WYOMING

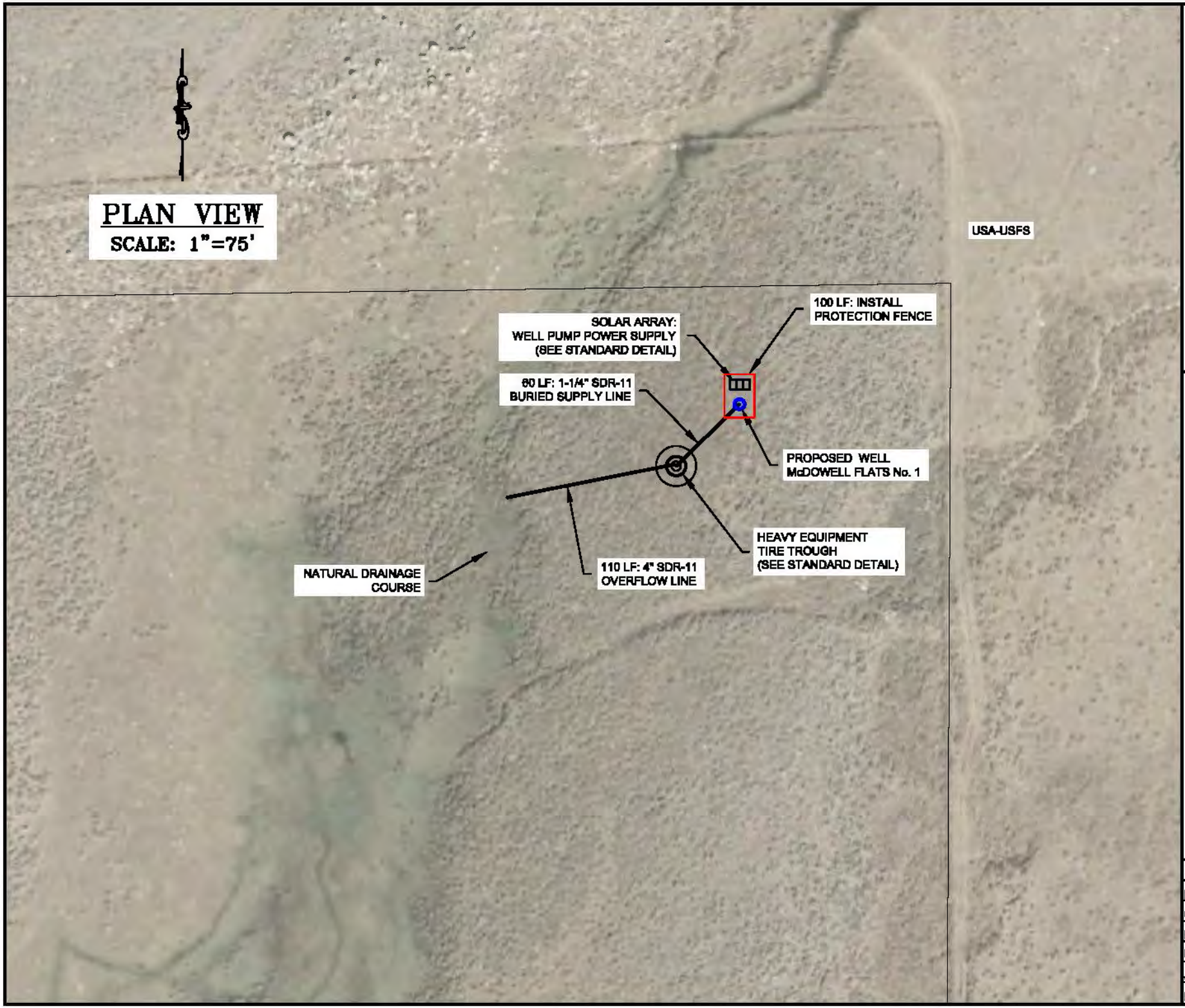

RIO VERDE
ENGINEERING
PINEDALE, WYOMING
(307) 367-2826
FAX# (307)-367-2546

-NOBLE FAMILY CLOSE, LLC-
MCDOWELL FLATS STOCK
WATER WELL DEVELOPMENT

DESIGNED BY:	MTJ
DRAWN BY:	MTJ
CHECKED BY:	MCE
DATE:	5/22/17
REV:	
JOB NO:	4183
PAGE:	1 OF 2

DISCLAIMER:

FIELD VERIFICATION IS NEEDED REGARDING WATER ZONES, STATIC WATER LEVEL, WATER YIELD, & DRAW DOWN. ACTUAL WELL DEPTHS AND POWER REQUIREMENTS WILL VARY.

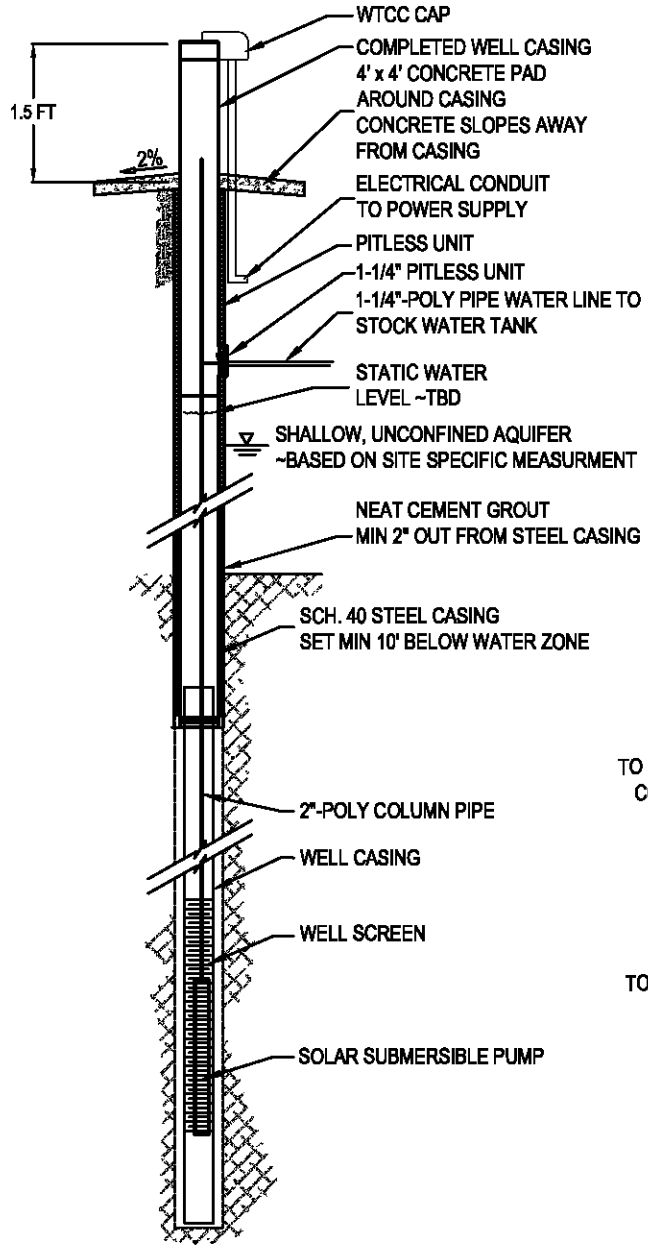

TYPICAL WELL

NOT TO SCALE

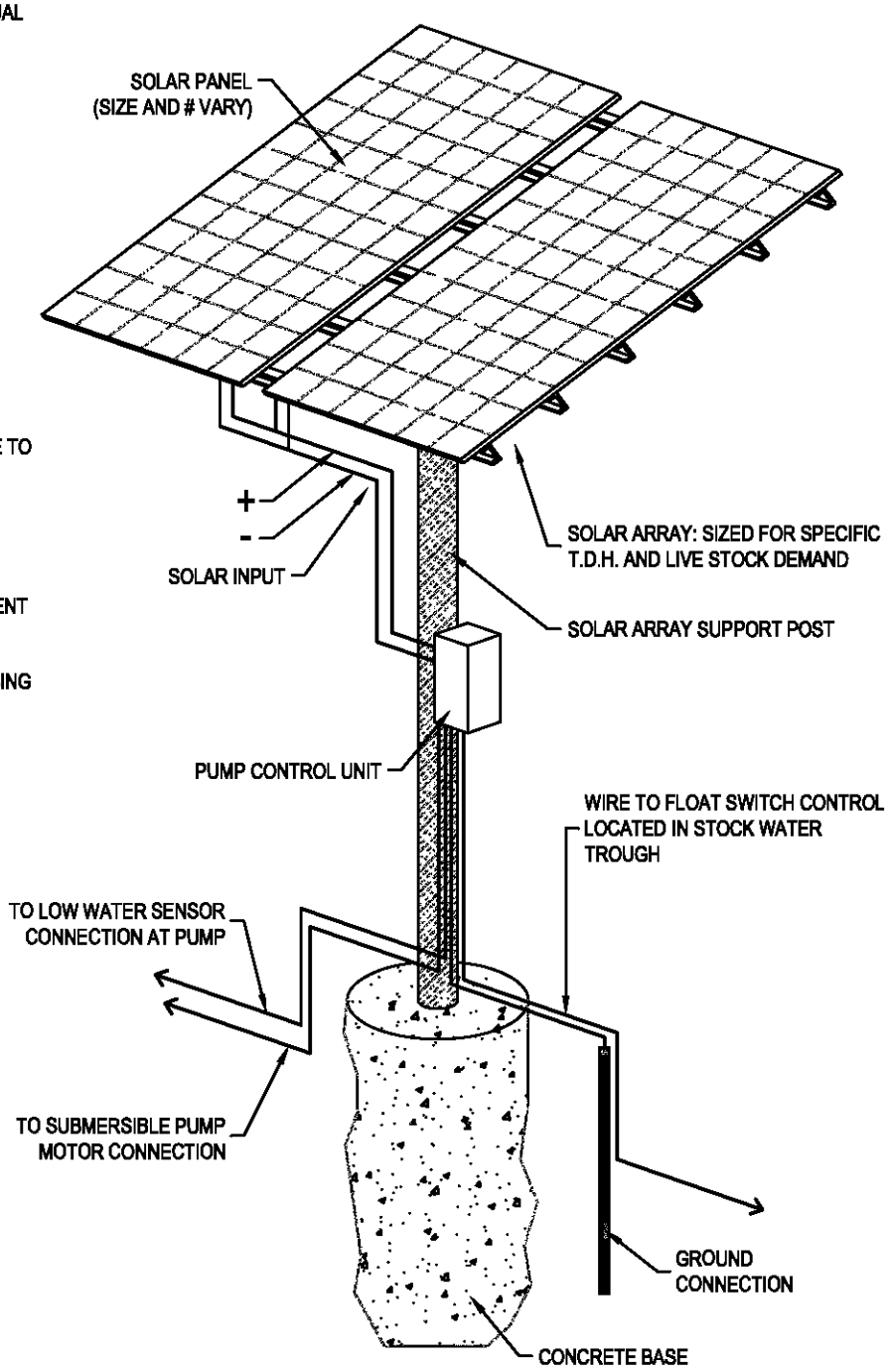

TYPICAL SOLAR ARRAY

NOT TO SCALE

DESIGNED BY:	
DRAWN BY: MTJ	
CHECKED BY: MCE	
DATE: 6/05/17	
REV:	
JOB NO: 4183	
PAGE: 1 OF 1	

STANDARD DETAIL
SOLAR POWERED STOCK WATERING SYSTEM

RIO VERDE ENGINEERING
(307) 367-2826
FAX# (307)-367-2546
PINEDALE, WYOMING

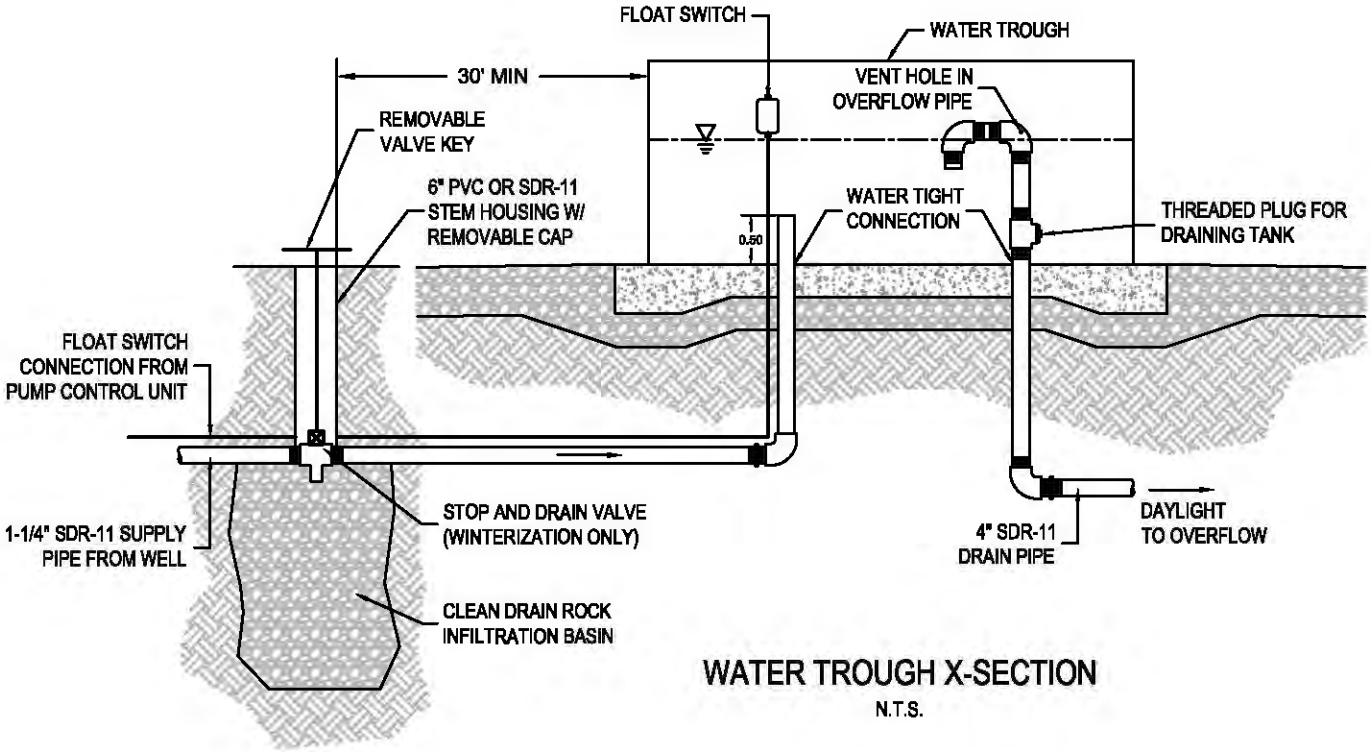

WATER TROUGH X-SECTION

N.T.S.

STANDARD DETAIL
STOCK WATER TROUGH
(RECTANGULAR)

RIO VERDE ENGINEERING
(307) 367-2826
FAX# (307)-367-2346
PINEDALE, WYOMING

DESIGNED BY:
DRAWN BY: MTJ
CHECKED BY: MCE
DATE: 4/21/17
REV:
JOB NO: 4183
PAGE: 1 OF 1

NEW FORK RIVER WATERSHED STUDY LEVEL I

Owner/Operator: Noble Family Close, LLC
Project Type: Irrigation
Project ID: 41
Project Name: Strong Ditch Diversion Rehabilitation Project
Location (PLSS): Sec. 34, T.35N., R.110W.
Location (Lat/Long): 42.962979°, 109.975306°

PROJECT COMPONENTS - ITEMIZED COSTS

ITEM No.	DESCRIPTION	QUANTITY	UNIT	UNIT COST	TOTAL COST
1	Mobilization	1	LS	$ 1,800.00	$ 1,800.00
2	Bonds	1	LS	$ 400.00	$ 400.00
3	Remove & Haul Off Old Headgate	1	LS	$ 600.00	$ 600.00
4	Old Diversion Reclamation	450	SY	$ 6.50	$ 2,925.00
5	Headgate (Steel)	1	LS	$ 4,600.00	$ 4,600.00
6	36" x 60" Screw Gate	1	EA	$ 5,500.00	$ 5,500.00
7	Steel Grate Walk Way (2.5' x 6.5')	1	LS	$ 300.00	$ 300.00
8	18" Wasteway Control Gate	1	EA	$ 1,100.00	$ 1,100.00
9	18" ADS Pipe	8	LF	$ 42.00	$ 336.00
10	New Ditch Construction	165	LF	$ 7.00	$ 1,155.00
11	Rock Vein & Bank Rip-Rap	75	CY	$ 50.00	$ 3,750.00
				TOTAL COMPONENT COST (SUBTOTAL #2):	$ 22,466.00

PREPARATION OF FINAL DESIGNS & SPECIFICATIONS:	$ 1,200.00
PERMITTING AND MITIGATION:	$ 800.00
LEGAL FEES:	$ -
ACQUISTION OF ACCESS AND RIGHTS-OF-WAY:	$ -
PRE-CONSTRUCTION COSTS (**SUBTOTAL #1**):	$ 2,000.00
TOTAL COMPONENT COST **(SUBTOTAL #2**):	$ 22,466.00
CONSTRUCTION ENGINEERING COST (SUBTOTAL #2 x 10%):	$ 2,246.60
COMPONENTS AND ENGINEERING COSTS (**SUBTOTAL #3**):	$ 24,712.60
CONTINGENCY (SUBTOTAL #3 X 15%):	$ 3,706.89
TOTAL CONSTRUCTION COST (**SUBTOTAL #4**):	$ 28,419.49
TOTAL PROJECT COST (**SUBTOTAL #1 + SUBTOTAL #4**):	**$ 30,419.49**

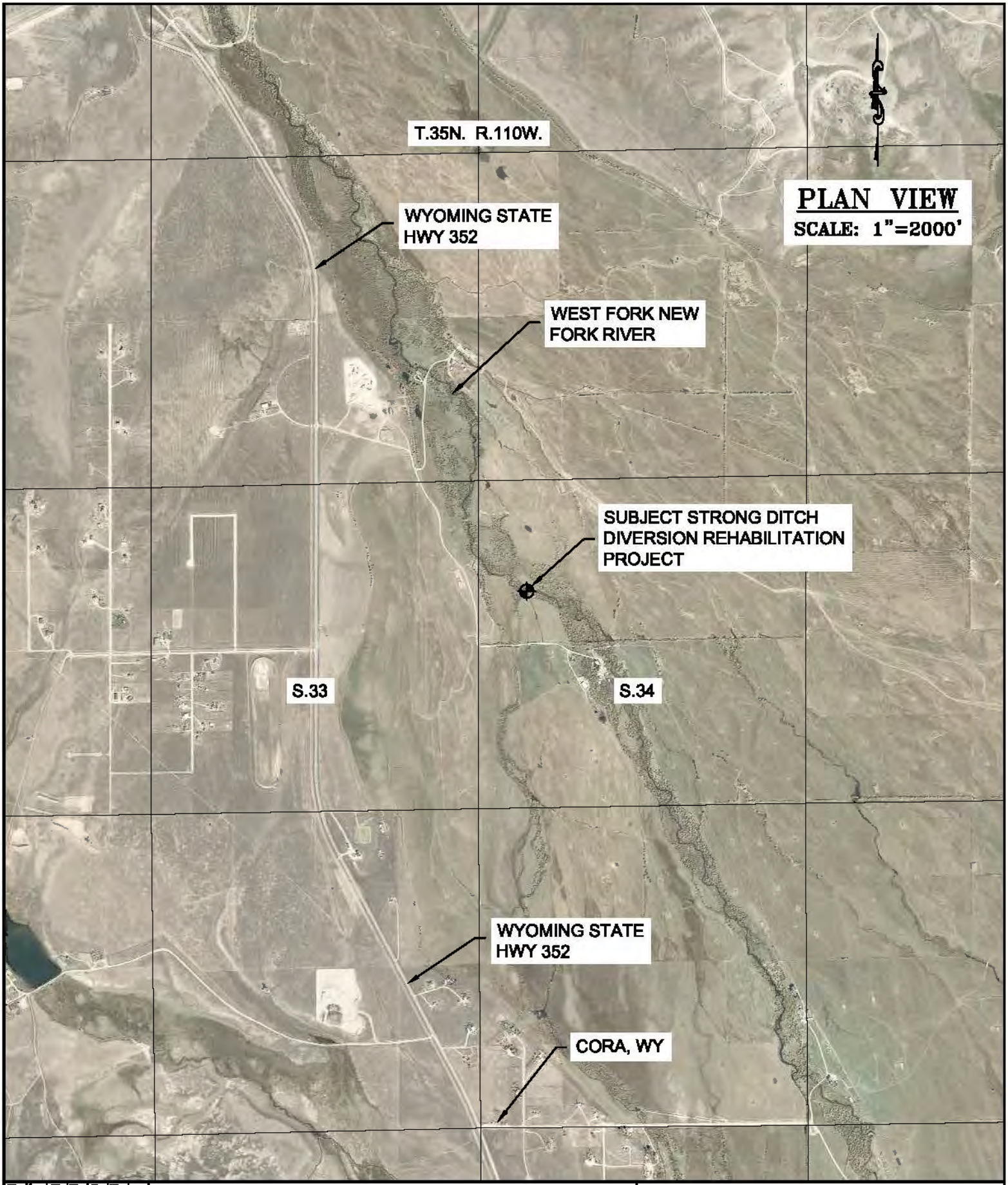

WWDC–NEW FORK RIVER WATERSHED MASTER PLAN–LEVEL I STUDY

NOBLE FAMILY CLOSE, LLC (STRONG DITCH DIVERSION REHAB PROJECT) LOCATED IN SECTION 34, T.35N., R.110W., SUBLETTE COUNTY, WY

DESIGNED BY: MTJ
DRAWN BY: MTJ
CHECKED BY: MCE
DATE: 7/05/17
REV:
JOB NO: 4183
PAGE: 1 OF 4

RIO VERDE ENGINEERING
(307) 367-2826
FAX# (307)-367-2548
PINEDALE, WYOMING

NOTE: SET NEW HEAD GATE INVERT 1 FT LOWER THAN ROCK VEIN CENTER

PLAN VIEW

SCALE: 1"=30'

EXISTING CHECK STRUCTURE

CONSTRUCT ROCK VEIN (SEE DETAIL)

WEST FORK NEW FORK RIVER

4%

CONSTRUCT BANK STABILIZATION FEATURE

INSTALL NEW FABRICATED STEEL HEAD GATE & WING WALLS (SEE DETAIL)

RECLAIM EXISTING ENTRY CHANNEL

CONSTRUCT NEW DITCH FROM HEAD GATE TO EXISTING DITCH (165 LF)

REMOVE OLD HEAD GATE

STRONG DITCH 4.27 CFS

EXISTING CHECK STRUCTURE

DESIGNED BY: MTJ	WWDC–NEW FORK RIVER WATERSHED MASTER PLAN–LEVEL I STUDY
DRAWN BY: MTJ	NOBLE FAMILY CLOSE, LLC (STRONG DITCH DIV. REHAB)
CHECKED BY: MCE	LOCATED IN SECTION 34, T.37N., R.110W.,
DATE: 8/18/17	SUBLETTE COUNTY, WY
REV:	
JOB NO: 4183	
PAGE: 2 OF 4	

RIO VERDE ENGINEERING
(307) 367-2826
FAX# (307)-367-2546
PINEDALE, WYOMING

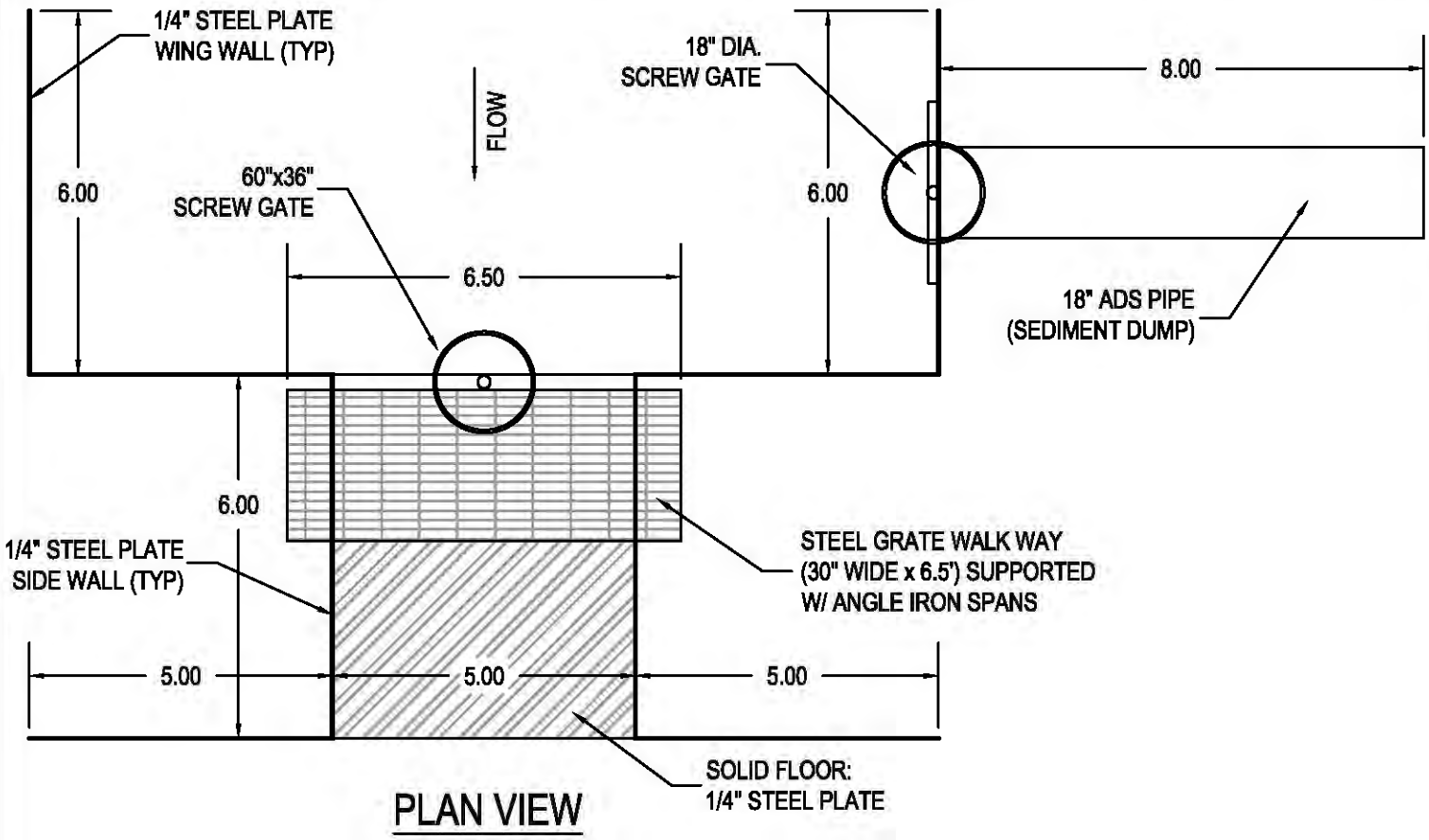

PLAN VIEW

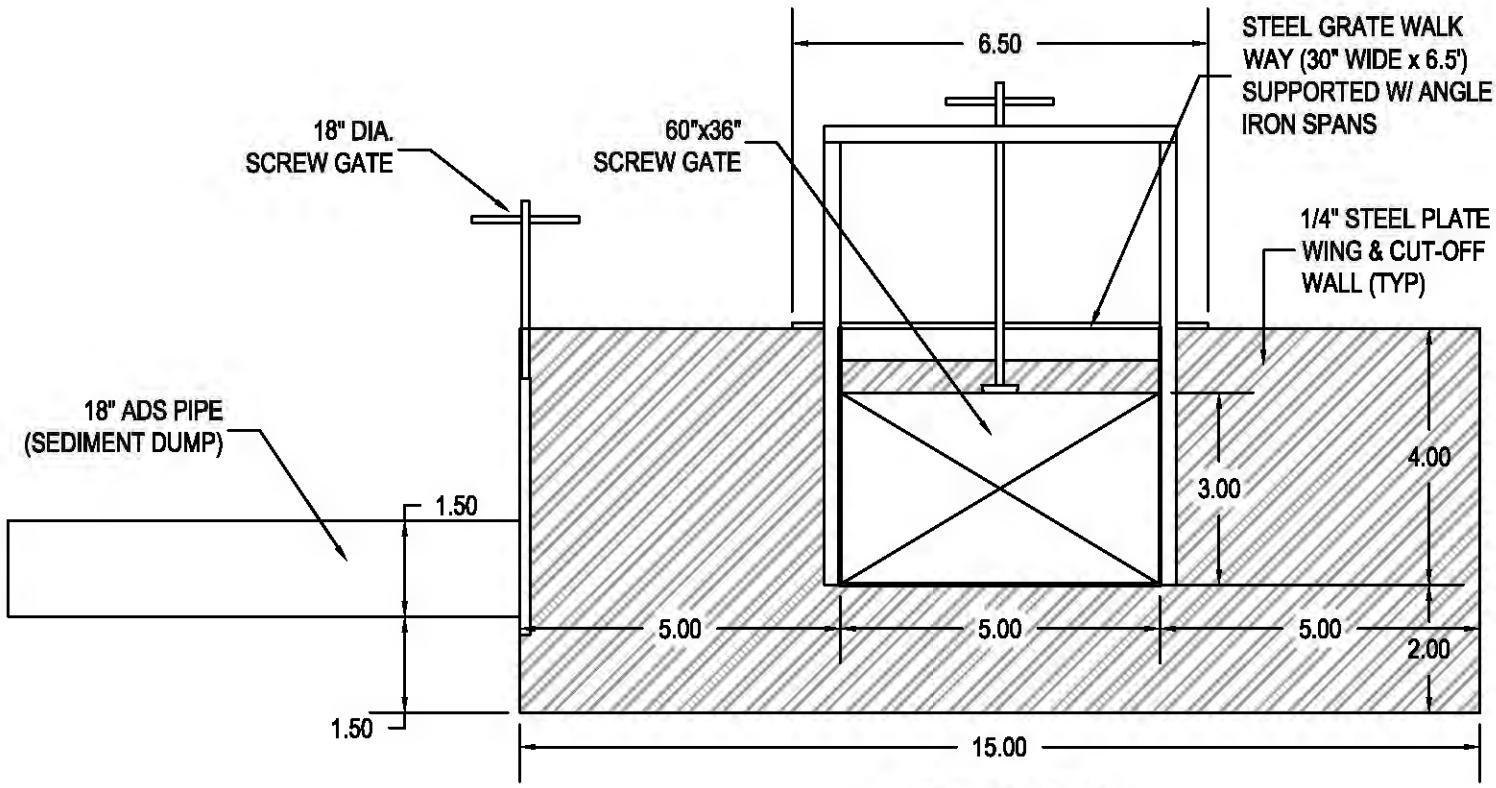

INLET VIEW

SCALE: 1"=3'

DESIGNED BY: MTJ	WWDC–NEW FORK RIVER WATERSHED MASTER PLAN–LEVEL I STUDY
DRAWN BY: MTJ	CORA VALLEY ANGUS (STRONG DITCH DIVERSION REHAB)
CHECKED BY: MCE	LOCATED IN SECTION 34, T.35N., R.110W.,
DATE: 7/17/17	SUBLETTE COUNTY, WY
REV:	
JOB NO: 4183	
PAGE: 3 OF 4	

RIO VERDE ENGINEERING
(307) 367-2828
FAX# (307)-367-2546
PINEDALE, WYOMING

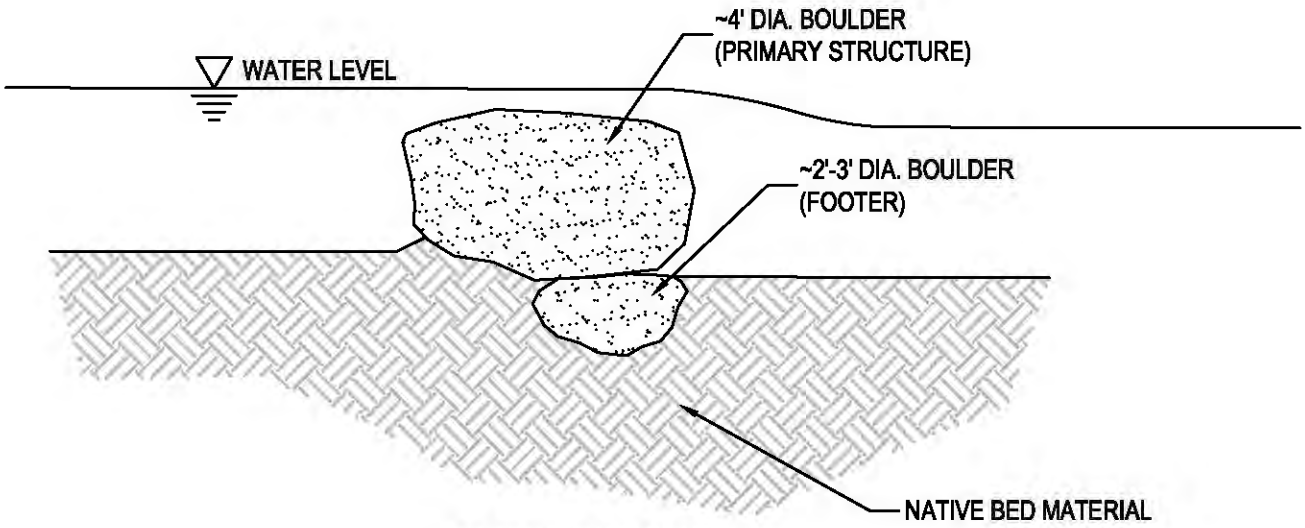

X-SECTION VIEW
N.T.S.

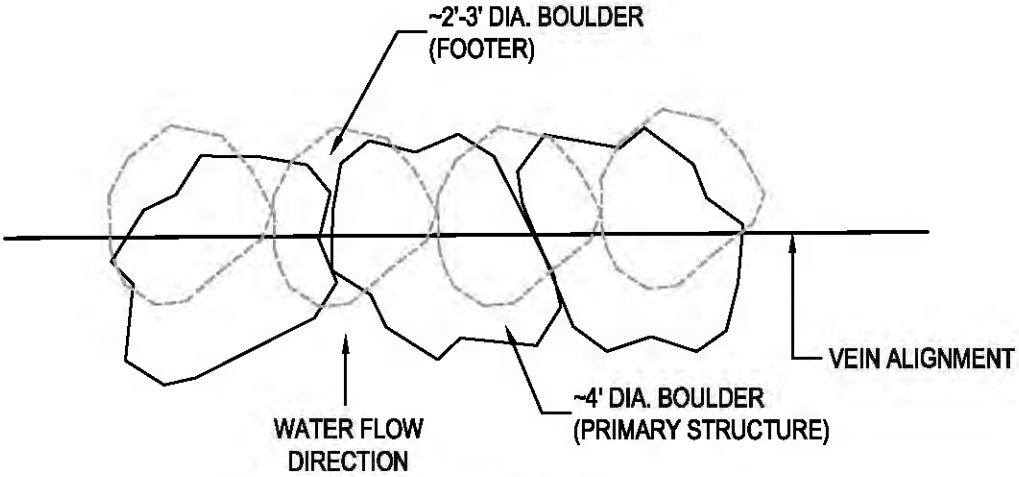

PLAN VIEW
N.T.S.

DESIGNED BY:
DRAWN BY: MTJ
CHECKED BY: MCE
DATE: 7/07/17
REV:
JOB NO: 4183
PAGE: 4 OF 4

STANDARD DETAIL
ROCK VEIN
CONSTRUCTION

RIO VERDE
ENGINEERING
(307) 367-2826
FAX# (307)-367-2548
PINEDALE, WYOMING

NEW FORK RIVER WATERSHED STUDY LEVEL I

Owner/Operator: Noble Family Close, LLC
Project Type: Stock Water Development
Project ID: 42
Project Name: Marshal Bump Stock Water Development Project
Location (PLSS): Sec. 33, T.35N., R.110W.
Location (Lat/Long): 42.96321°, 109.97963°

PROJECT COMPONENTS - ITEMIZED COSTS

ITEM No.	DESCRIPTION	QUANTITY	UNIT	UNIT COST	TOTAL COST
1	Mobilization	1	LS	$ 2,500.00	$ 2,500.00
2	Bonds	1	LS	$ 800.00	$ 800.00
3	Well Drilling	200	LF	$ 65.00	$ 13,000.00
4	Submersible Pump	1	EA	$ 1,200.00	$ 1,200.00
5	Pump Test	1	LS	$ 2,500.00	$ 2,500.00
6	Transformer	1	LS	$ 4,500.00	$ 4,500.00
7	Power Line Trench & Conduit	25	LF	$ 4.00	$ 100.00
8	Meter Base	1	EA	$ 2,000.00	$ 2,000.00
9	750 gal Trough (Complete)	1	LS	$ 2,200.00	$ 2,200.00
10	4" SDR 11 Pipe	135	LF	$ 6.95	$ 938.25
11	1-1/4" SDR 11 Pipe	120	LF	$ 3.05	$ 366.00
12	4-Rail Pole Fence	40	LF	$ 8.50	$ 340.00
				TOTAL COMPONENT COST (SUBTOTAL #2):	$ 30,444.25

PREPARATION OF FINAL DESIGNS & SPECIFICATIONS:	$ 1,300.00
PERMITTING AND MITIGATION:	$ 300.00
LEGAL FEES:	$ -
ACQUISTION OF ACCESS AND RIGHTS-OF-WAY:	$ -
PRE-CONSTRUCTION COSTS (**SUBTOTAL #1**):	$ 1,600.00
TOTAL COMPONENT COST **(SUBTOTAL #2**):	$ 30,444.25
CONSTRUCTION ENGINEERING COST (SUBTOTAL #2 x 10%):	$ 3,044.43
COMPONENTS AND ENGINEERING COSTS (**SUBTOTAL #3**):	$ 33,488.68
CONTINGENCY (SUBTOTAL #3 X 15%):	$ 5,023.30
TOTAL CONSTRUCTION COST (**SUBTOTAL #4**):	$ 38,511.98
TOTAL PROJECT COST (**SUBTOTAL #1 + SUBTOTAL #4**):	**$ 40,111.98**

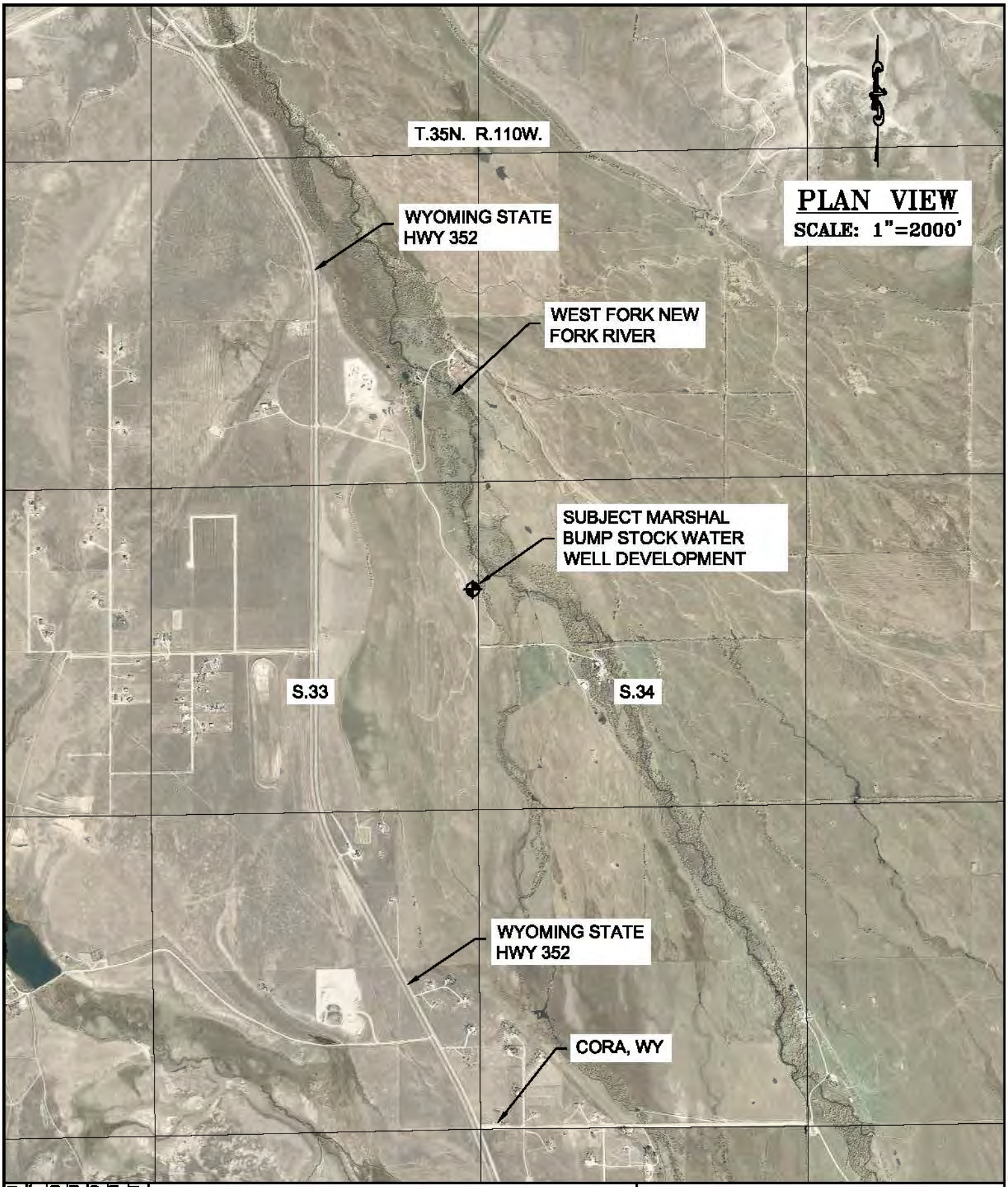

WWDC–NEW FORK RIVER WATERSHED MASTER PLAN–LEVEL I STUDY

NOBLE FAMILY CLOSE, LLC (MARSHAL BUMP STOCK WATER DEVELOPMENT PROJECT) LOCATED IN SECTION 33, T.35N., R.110W., SUBLETTE COUNTY, WY

RIO VERDE ENGINEERING
(307) 367-2826
FAX# (307)-367-2546
PINEDALE, WYOMING

DESIGNED BY: MTJ
DRAWN BY: MTJ
CHECKED BY: MCE
DATE: 7/05/17
REV:
JOB NO: 4183
PAGE: 1 OF 2

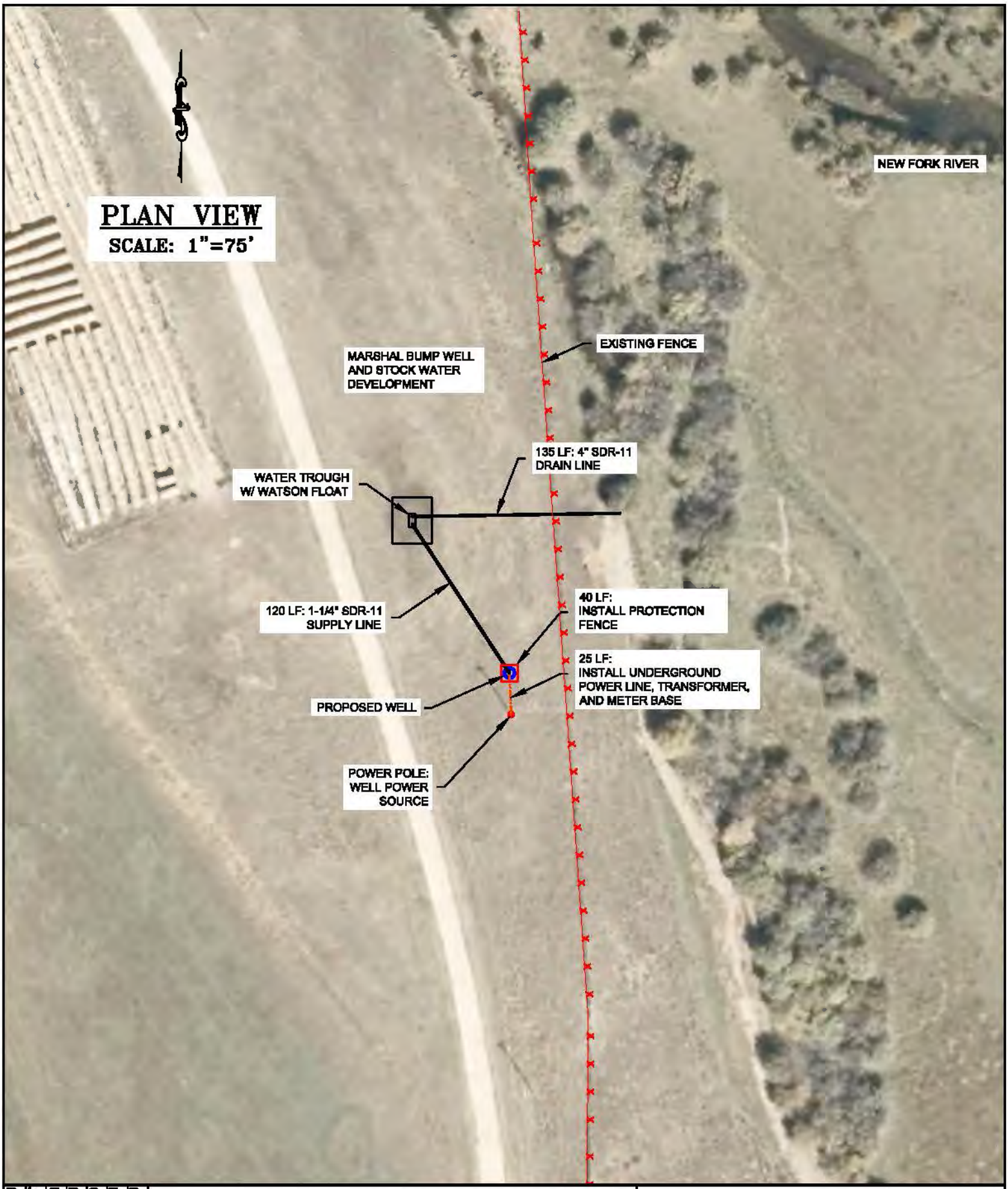

DESIGNED BY: MTJ
DRAWN BY: MTJ
CHECKED BY: MCE
DATE: 6/16/17
REV:
JOB NO: 4183
PAGE: 2 OF 2

WWDC–NEW FORK RIVER WATERSHED MASTER PLAN–LEVEL I STUDY

NOBLE FAMILY CLOSE, LLC (MARSHAL BUMP STOCK WATER DEVELOPMENT PROJECT) LOCATED IN SECTION 33, T.35N., R.110W., SUBLETTE COUNTY, WY

RIO VERDE ENGINEERING
(307) 367-2826
FAX# (307)-367-2546
PINEDALE, WYOMING

TYPICAL WELL

N.T.S.

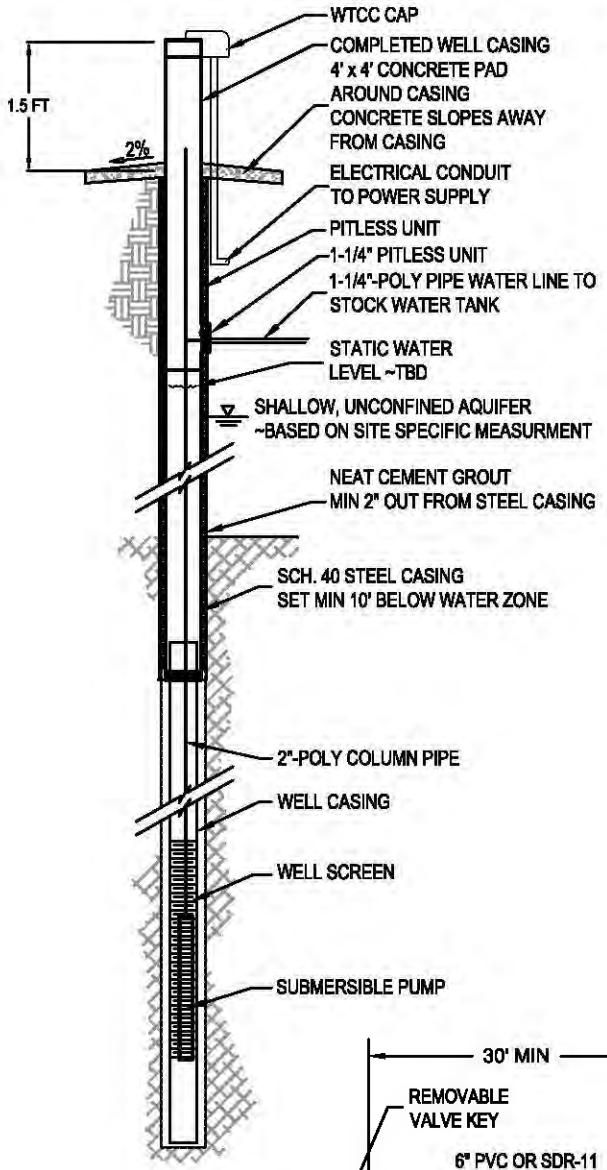

DISCLAIMER:

FIELD VERIFICATION IS NEEDED REGARDING WATER ZONES, STATIC WATER LEVEL, WATER YIELD, & DRAW DOWN. ACTUAL WELL DEPTHS AND POWER REQUIREMENTS WILL VARY.

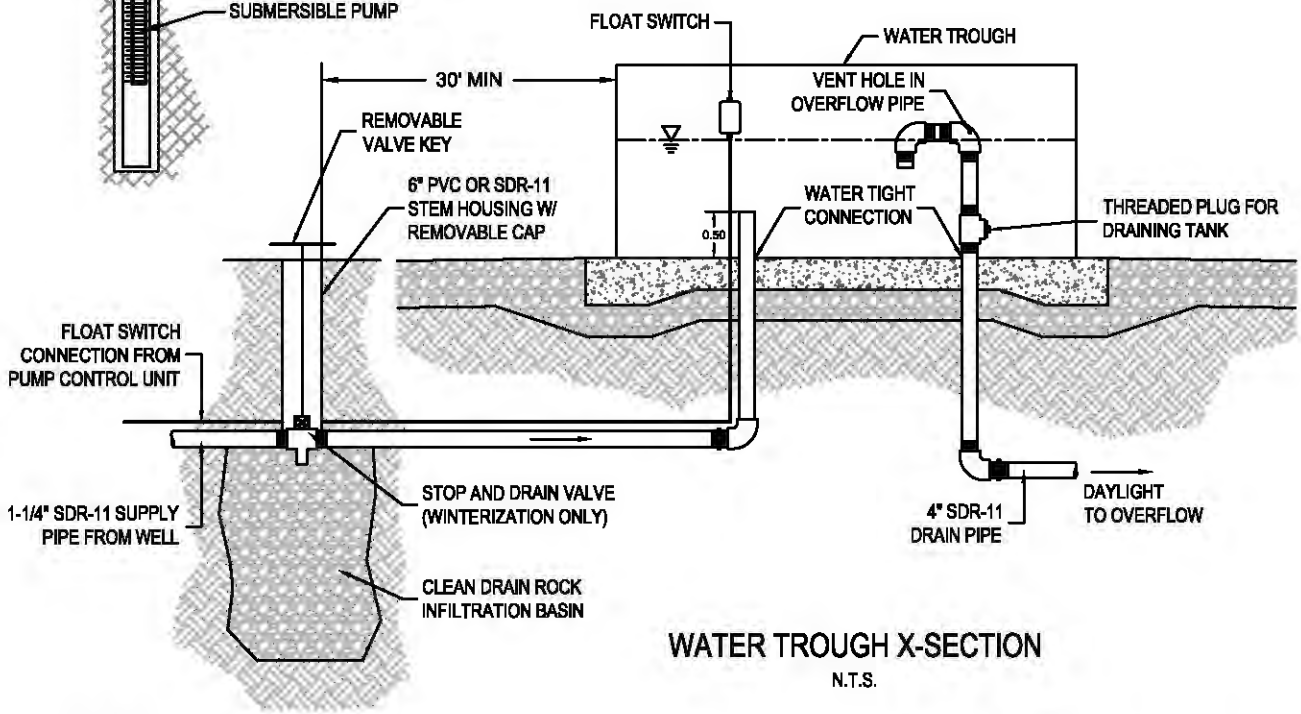

WATER TROUGH X-SECTION

N.T.S.

DESIGNED BY: MTJ	STANDARD DETAIL	RIO VERDE ENGINEERING
DRAWN BY: MTJ	TRADITIONAL PUMP SUPPLY & WATER TROUGH	(307) 367-2828 FAX# (307)-367-2546 PINEDALE, WYOMING
CHECKED BY: MCE		
DATE: 6/16/17		
REV:		
JOB NO: 4183		
PAGE: 1 OF 1		

PROJECT STAKEHOLDER

SHELTER PARK H.O.A.

NEW FORK RIVER WATERSHED STUDY LEVEL I

Owner/Operator: Shelter Park HOA
Project Type: Irrigation
Project ID: 65
Project Name:Orcutt Ditch Rehabilitation Project
Location (PLSS): Sec. 33, T.34N., R.109W.
Location (Lat/Long): 42.88478°, 109.86221°

PROJECT COMPONENTS - ITEMIZED COSTS

ITEM No.	DESCRIPTION	QUANTITY	UNIT	UNIT COST	TOTAL COST
1	Mobilization	1	LS	$ 4,000.00	$ 4,000.00
2	Bonds	1	LS	$ 1,000.00	$ 1,000.00
3	12" Diversion Structure	1	LS	$ 2,300.00	$ 2,300.00
4	2-1/2" HDPE PIPE	1005	LF	$ 1.80	$ 1,809.00
5	3" HDPE PIPE	1470	LF	$ 2.50	$ 3,675.00
6	4" HDPE PIPE	3165	LF	$ 3.40	$ 10,761.00
7	6" HDPE PIPE	415	LF	$ 12.00	$ 4,980.00
8	8" HDPE PIPE	1600	LF	$ 16.50	$ 26,400.00
9	8" Tee Fitting	1	EA	$ 205.00	$ 205.00
10	6" Tee Fitting	1	EA	$ 185.00	$ 185.00
11	4" Tee Fitting	1	EA	$ 52.00	$ 52.00
12	8"x8"x4" Tee Fitting	1	EA	$ 190.00	$ 190.00
13	4"x4"x3" Tee Fitting	1	EA	$ 86.00	$ 86.00
14	22-1/2° Elbow (3")	3	EA	$ 42.00	$ 126.00
15	90° Elbow (4")	1	EA	$ 45.00	$ 45.00
16	90° Elbow (3")	1	EA	$ 39.00	$ 39.00
17	Street Crossings	5	EA	$ 1,600.00	$ 8,000.00
18	Individual Service Tie-ins	64	EA	$ 150.00	$ 9,600.00
				TOTAL COMPONENT COST (SUBTOTAL #2):	$ 63,853.00

PREPARATION OF FINAL DESIGNS & SPECIFICATIONS:	$ 3,500.00
PERMITTING AND MITIGATION:	$ 7,500.00
LEGAL FEES:	$ 2,300.00
ACQUISTION OF ACCESS AND RIGHTS-OF-WAY:	$ 9,500.00
PRE-CONSTRUCTION COSTS (**SUBTOTAL #1**):	$ 22,800.00
TOTAL COMPONENT COST (**SUBTOTAL #2**):	$ 63,853.00
CONSTRUCTION ENGINEERING COST (SUBTOTAL #2 x 10%):	$ 6,385.30
COMPONENTS AND ENGINEERING COSTS (**SUBTOTAL #3**):	$ 70,238.30
CONTINGENCY (SUBTOTAL #3 X 15%):	$ 10,535.75
TOTAL CONSTRUCTION COST (**SUBTOTAL #4**):	$ 80,774.05
TOTAL PROJECT COST (**SUBTOTAL #1 + SUBTOTAL #4**):	**$ 103,574.05**

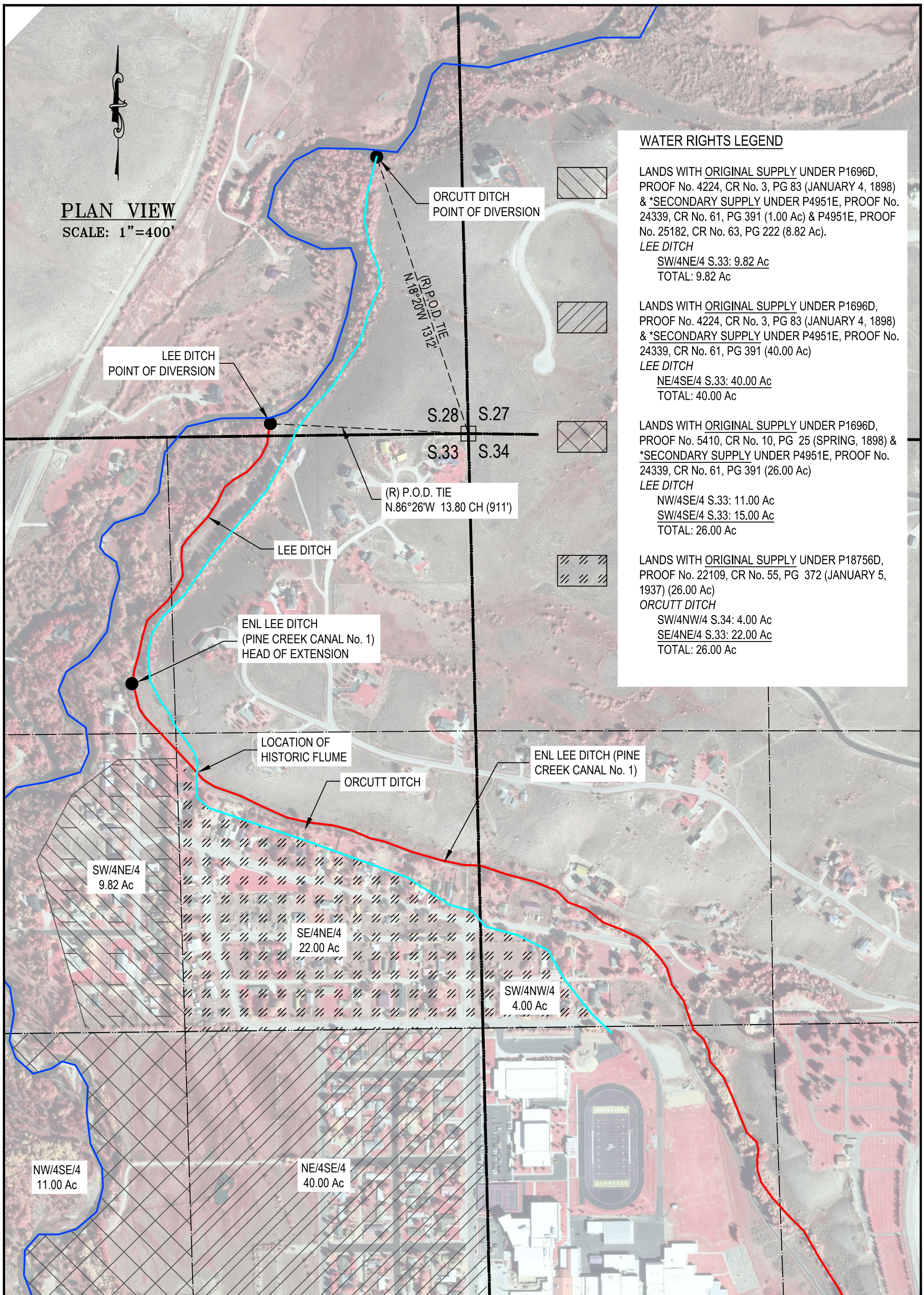

WATER RIGHTS LEGEND

LANDS WITH ORIGINAL SUPPLY UNDER P1696D, PROOF No. 4224, CR No. 3, PG 83 (JANUARY 4, 1898) & *SECONDARY SUPPLY UNDER P4951E, PROOF No. 24339, CR No. 61, PG 391 (1.00 Ac) & P4951E, PROOF No. 25182, CR No. 63, PG 222 (8.82 Ac).
LEE DITCH
SW/4NE/4 S.33: 9.82 Ac
TOTAL: 9.82 Ac

LANDS WITH ORIGINAL SUPPLY UNDER P1696D, PROOF No. 4224, CR No. 3, PG 83 (JANUARY 4, 1898) & *SECONDARY SUPPLY UNDER P4951E, PROOF No. 24339, CR No. 61, PG 391 (40.00 Ac)
LEE DITCH
NE/4SE/4 S.33: 40.00 Ac
TOTAL: 40.00 Ac

LANDS WITH ORIGINAL SUPPLY UNDER P1696D, PROOF No. 5410, CR No. 10, PG 25 (SPRING, 1898) & *SECONDARY SUPPLY UNDER P4951E, PROOF No. 24339, CR No. 61, PG 391 (26.00 Ac)
LEE DITCH
NW/4SE/4 S.33: 11.00 Ac
SW/4SE/4 S.33: 15.00 Ac
TOTAL: 26.00 Ac

LANDS WITH ORIGINAL SUPPLY UNDER P18756D, PROOF No. 22109, CR No. 55, PG 372 (JANUARY 5, 1937) (26.00 Ac)
ORCUTT DITCH
SW/4NW/4 S.34: 4.00 Ac
SE/4NE/4 S.33: 22.00 Ac
TOTAL: 26.00 Ac

WWDC–NEW FORK RIVER WATERSHED MASTER PLAN–LEVEL I STUDY

SHELTER PARK HOMEOWNERS (ORCUTT DITCH REHAB)
LOCATED IN SECTION 33, T.34N., R.109W.,
SUBLETTE COUNTY, WY

DESIGNED BY:
DRAWN BY: MTJ
CHECKED BY: MCE
DATE: 4/22/17
REV:
JOB NO: 4183
PAGE: 1 OF 3

RIO VERDE ENGINEERING
(307) 367–2826
FAX# (307)–367–2546
PINEDALE, WYOMING

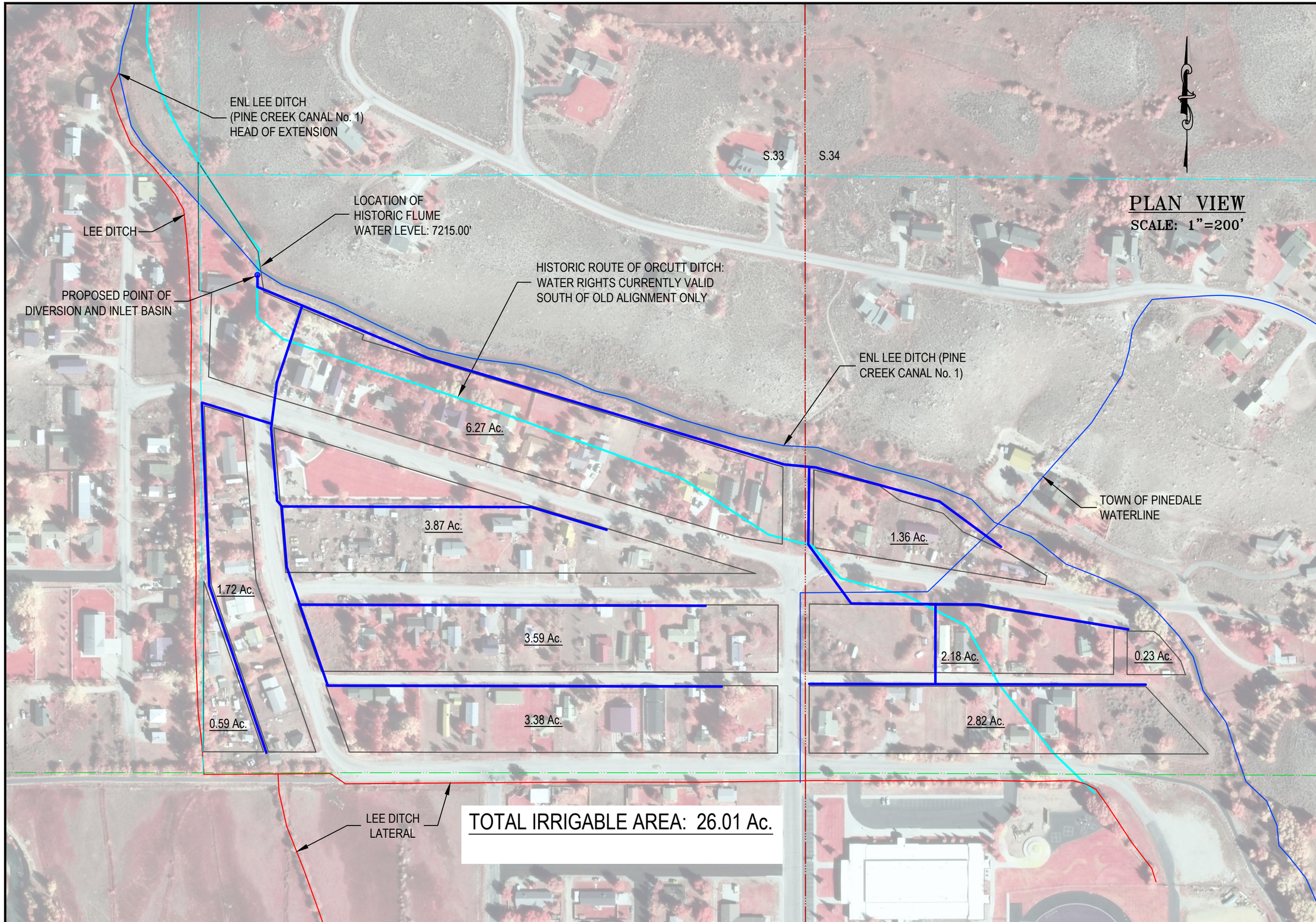

PLAN VIEW
SCALE: 1"=200'

RIO VERDE
ENGINEERING
PINEDALE, WYOMING
(307) 367-2826
FAX# (307)-367-2546

WWDC-NEW FORK RIVER WATERSHED
MASTER PLAN-LEVEL I STUDY
SHELTER PARK HOMEOWNERS (ORCUTT DITCH REHAB)
LOCATED IN SECTION 33, T.34N., R.109W.,
SUBLETTE COUNTY, WY

DESIGNED BY:
DRAWN BY: MTJ
CHECKED BY: MCE
DATE: 6/28/17
REV:
JOB NO: 4183
PAGE: 2 OF 3

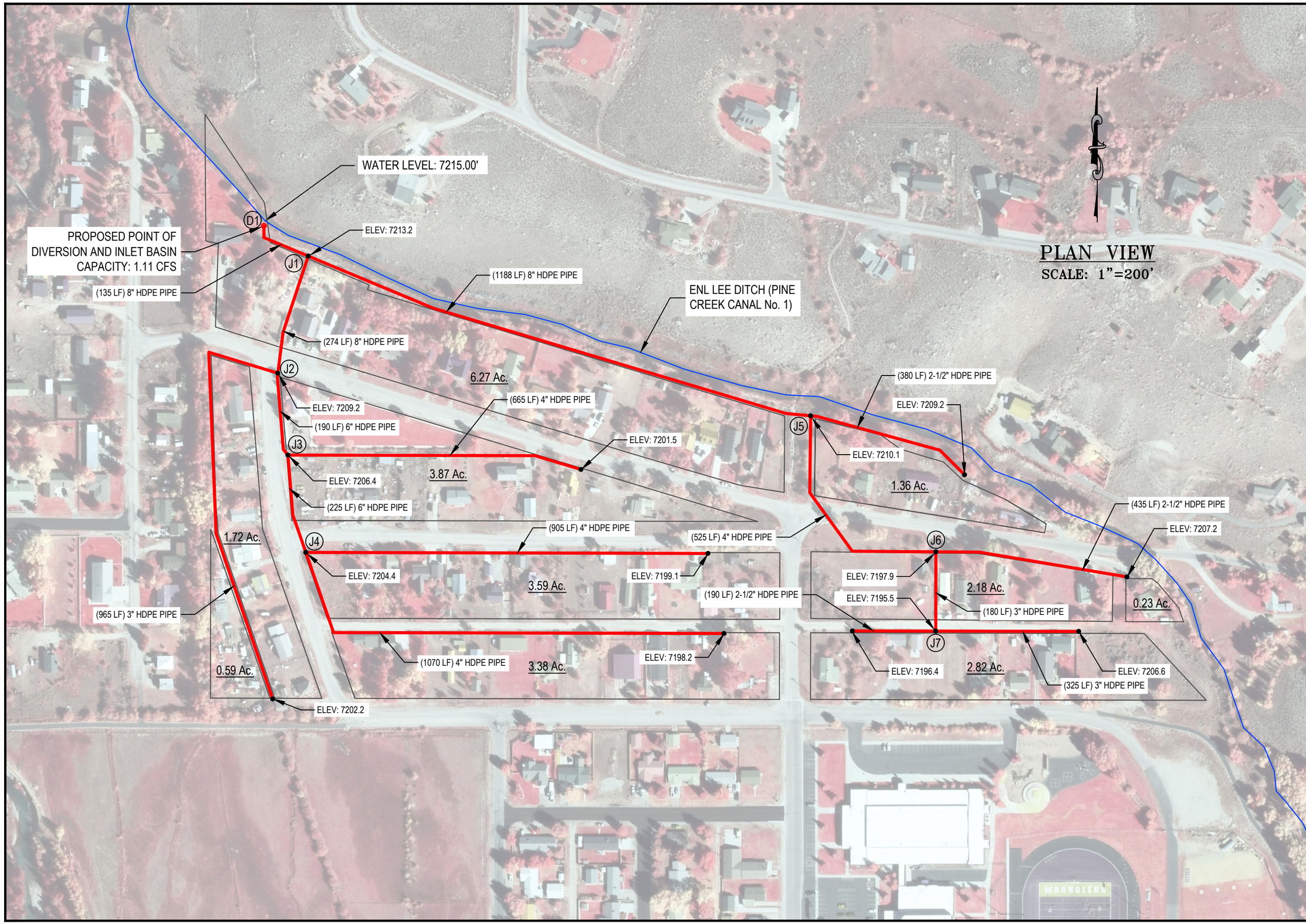

RIO VERDE ENGINEERING
PINEDALE, WYOMING
(307) 367-2826
FAX# (307)-367-2546

WWDC-NEW FORK RIVER WATERSHED
MASTER PLAN-LEVEL I STUDY
SHELTER PARK HOMEOWNERS (ORCUTT DITCH REHAB)
LOCATED IN SECTION 33, T.34N., R.109W.,
SUBLETTE COUNTY, WY

DESIGNED BY:	
DRAWN BY:	MTJ
CHECKED BY:	MCE
DATE:	6/28/17
REV:	
JOB NO:	4183
PAGE:	3 OF 3

ORCUTT DITCH PIPELINE HEAD CALCULATIONS

D1 WATER ELEV. (FT): 7215.0

FT/PSI: 2.31

NODE	ELEV. (FT)
J1	7213.2
J2	7209.2
J2-WEST	7202.2
J3	7206.4
J3-EAST	7201.5
J4	7204.4
J4-EAST	7199.1
J4-SOUTH	7198.2
J5	7210.1
J5-EAST	7209.2
J6	7197.9
J6-EAST	7207.2
J7	7196.4
J7-EAST	7206.6
J7-WEST	7196.4

PIPE RUN		PIPE PARAMETERS			FRICTION LOSS (-)		
FROM	TO	PIPE DIA. (IN.)	PIPE LENGTH (FT)	FLOW (GPM)	PSI LOSS / 100 FT	PIPE LOSS (PSI)	NODE PRESSURE (PSI)
D1	**J1**	8	135	500	0.08	0.11	**0.67**
J1	**J2**	8	274	250	0.03	0.08	**2.32**
J1	**J5**	8	1188	250	0.04	0.48	**1.54**
J2	**J2-WEST**	3	965	45	0.18	1.74	**3.61**
J2	**J3**	6	190	225	0.16	0.30	**3.23**
J3	**J3-EAST**	4	665	80	0.15	1.00	**4.35**
J3	**J4**	6	225	140	0.07	0.16	**3.94**
J4	**J4-EAST**	4	905	70	0.12	1.09	**5.15**
J4	**J4-SOUTH**	4	1070	70	0.12	1.28	**5.34**
J5	**J5-EAST**	2.5	380	30	0.22	0.84	**1.09**
J5	**J6**	4	525	100	0.23	1.21	**5.61**
J6	**J6-EAST**	2.5	435	30	0.22	0.96	**0.63**
J6	**J7**	3	180	55	0.26	0.47	**6.18**
J7	**J7-EAST**	3	325	40	0.14	0.46	**0.92**
J7	**J7-WEST**	2.5	190	20	0.10	0.19	**5.60**

PIPE SCHEDULE

PIPE	LF
8" HDPE	**1597**
6" HDPE	**415**
4" HDPE	**3165**
3" HDPE	**1470**
2-1/2" HDPE	**1005**

PROJECT STAKEHOLDER

STEEGE, RICH

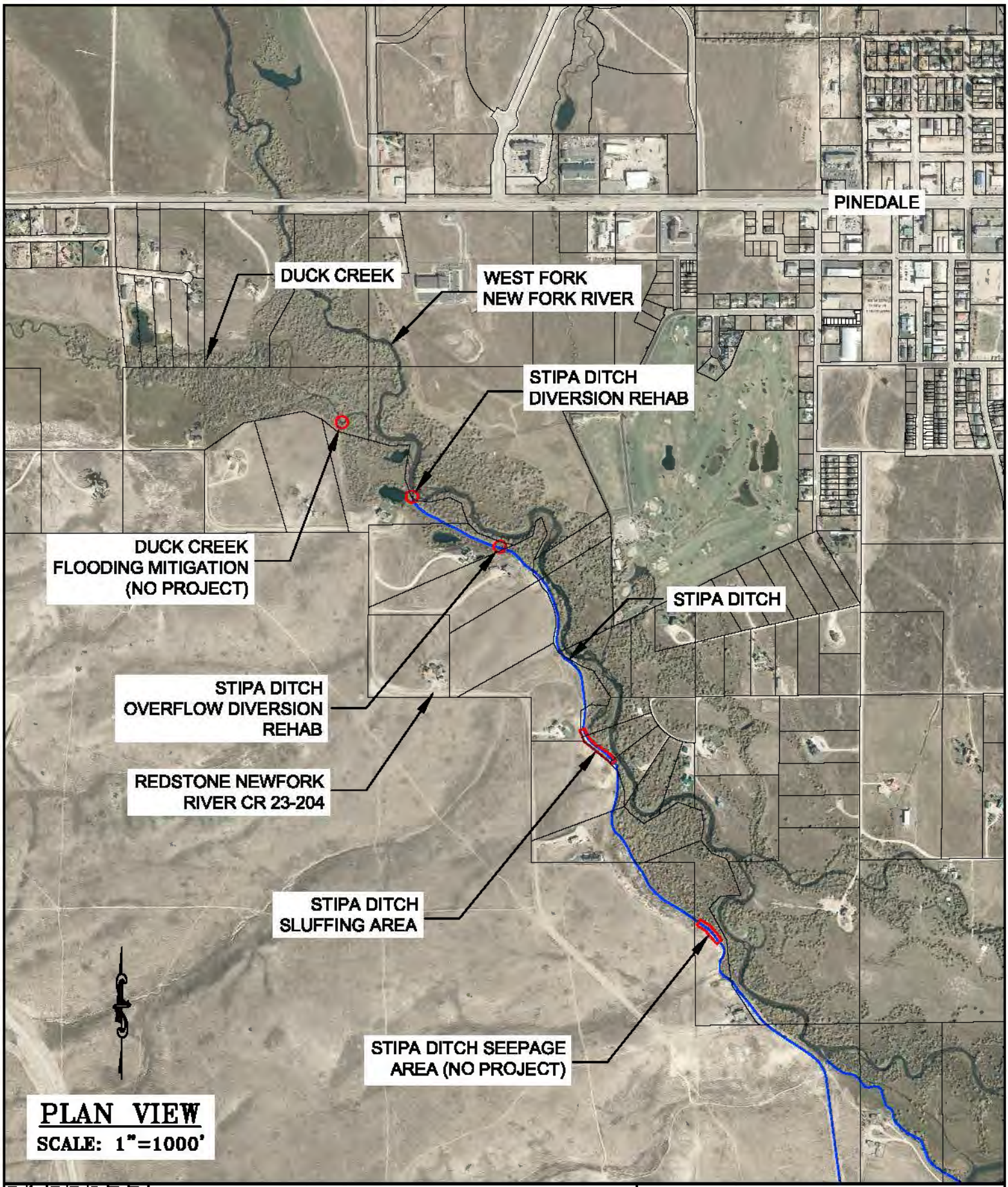

PLAN VIEW

SCALE: 1"=1000'

DESIGNED BY: MTJ
DRAWN BY: MTJ
CHECKED BY: MCE
DATE: 7/05/17
REV:
JOB NO: 4183
PAGE: 1 OF 1

WWDC–NEW FORK RIVER WATERSHED MASTER PLAN–LEVEL I STUDY

RICH STEEGE (STIPA DITCH PROJECT VICINITY MAP)
LOCATED IN SECTION 5, T.33N., R.109W.,
SUBLETTE COUNTY, WY

RIO VERDE ENGINEERING
(307) 367-2828
FAX# (307)-367-2546
PINEDALE, WYOMING

NEW FORK RIVER WATERSHED STUDY LEVEL I

Owner/Operator: Steege, Rich
Project Type: Irrigation
Project ID: 9
Project Name: Stipa Ditch Diversion Rehabilitation Project
Location (PLSS): Sec. 5, T.33N., R.109W.
Location (Lat/Long): 42.86035°, 109.88928°

PROJECT COMPONENTS - ITEMIZED COSTS

ITEM No.	DESCRIPTION	QUANTITY	UNIT	UNIT COST	TOTAL COST
1	Mobilization	1	LS	$ 1,800.00	$ 1,800.00
2	Bonds	1	LS	$ 500.00	$ 500.00
2	Remove & Haul Off Existing Structure	1	LS	$ 650.00	$ 650.00
3	Headgate (Concrete)	1	LS	$ 3,700.00	$ 3,700.00
4	Check Board Box (Steel)	1	LS	$ 900.00	$ 900.00
5	Salvage & Reinstall Existing Screw Gate	1	LS	$ 350.00	$ 350.00
6	Install 12" Screw Gate (Sediment Dump)	1	EA	$ 1,100.00	$ 1,100.00
7	18" ADS N-12 Pipe	15	LF	$ 42.00	$ 630.00
8	12" ADS N-12 Pipe	25	LF	$ 36.00	$ 900.00
9	Rock Vein Check	120	CY	$ 45.00	$ 5,400.00
10	River Bank Stabilization	44	CY	$ 45.00	$ 1,980.00
11	Install Fabric & Rip-Rap (Headgate Outlet)	1	LS	$ 850.00	$ 850.00
				TOTAL COMPONENT COST (SUBTOTAL #2):	$ 17,910.00

PREPARATION OF FINAL DESIGNS & SPECIFICATIONS:	$ 1,200.00
PERMITTING AND MITIGATION:	$ 1,300.00
LEGAL FEES:	$ -
ACQUISTION OF ACCESS AND RIGHTS-OF-WAY:	$ 300.00
PRE-CONSTRUCTION COSTS (**SUBTOTAL #1**):	$ 2,800.00
TOTAL COMPONENT COST (**SUBTOTAL #2**):	$ 17,910.00
CONSTRUCTION ENGINEERING COST (SUBTOTAL #2 x 10%):	$ 1,791.00
COMPONENTS AND ENGINEERING COSTS (**SUBTOTAL #3**):	$ 19,701.00
CONTINGENCY (SUBTOTAL #3 X 15%):	$ 2,955.15
TOTAL CONSTRUCTION COST (**SUBTOTAL #4**):	$ 22,656.15
TOTAL PROJECT COST (**SUBTOTAL #1 + SUBTOTAL #4**):	**$ 25,456.15**

DESIGNED BY: MTJ	
DRAWN BY: MTJ	
CHECKED BY: MCE	
DATE: 7/05/17	
REV:	
JOB NO: 4183	
PAGE: 1 OF 2	

WWDC–NEW FORK RIVER WATERSHED MASTER PLAN–LEVEL I STUDY

RICH STEEGE (STIPA DITCH DIVERSION REHAB)
LOCATED IN SECTION 5, T.33N., R.109W.,
SUBLETTE COUNTY, WY

RIO VERDE ENGINEERING
(307) 367-2826
FAX# (307)-367-2546
PINEDALE, WYOMING

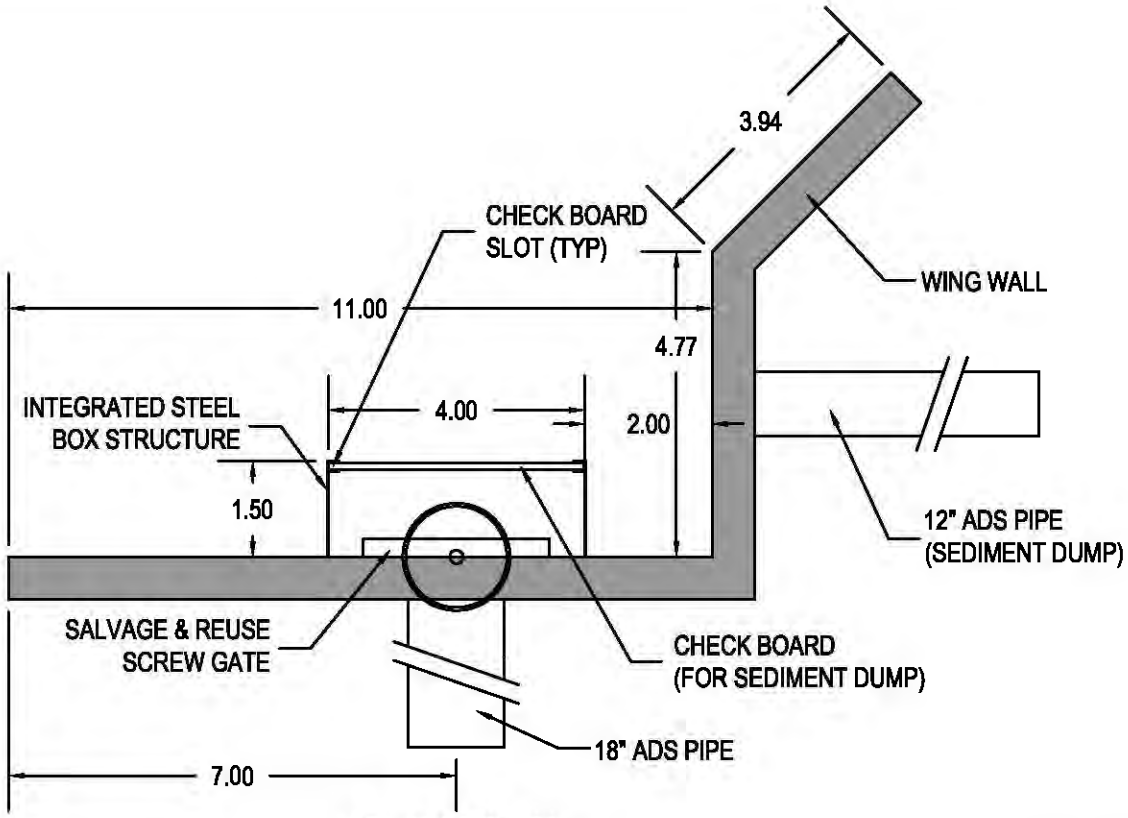

PLAN VIEW

TOTAL CONCRETE
VOLUME: 3.7 CY

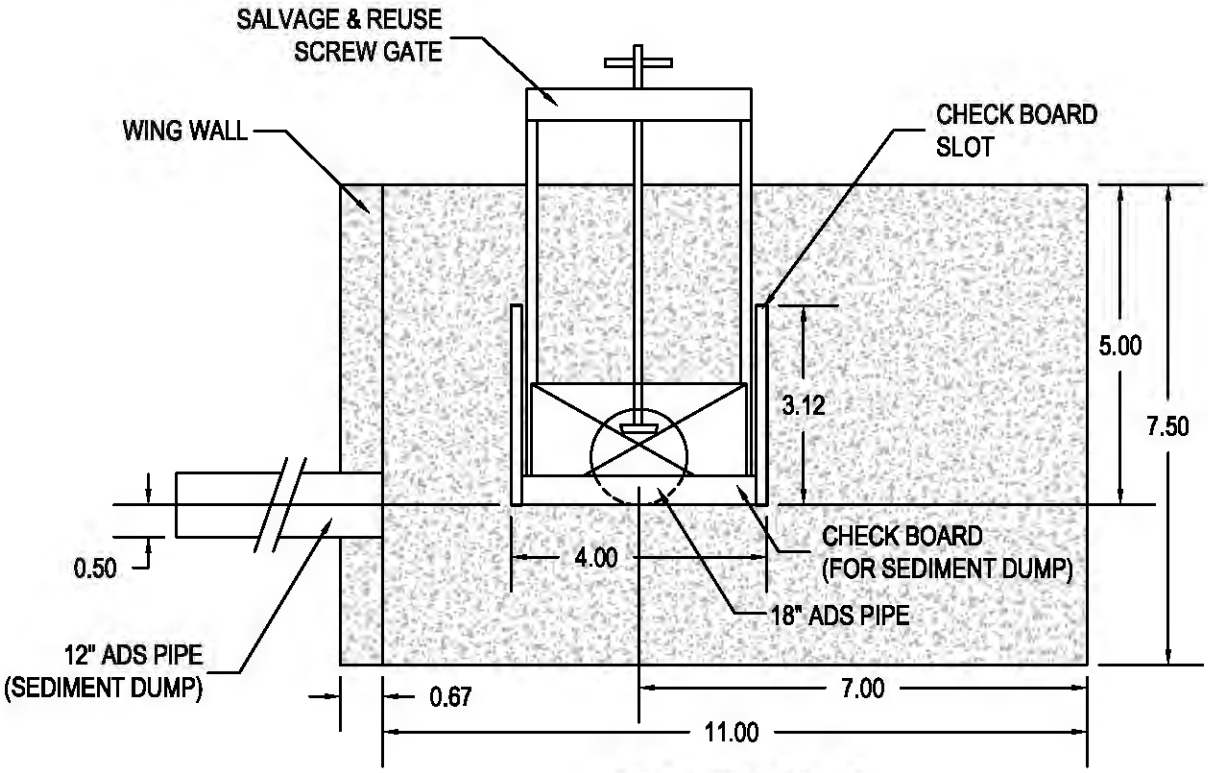

PROFILE VIEW

SCALE: 1"=3'

PAGE: 2 OF 3	JOB NO: 4183	REV:	DATE: 7/17/17	CHECKED BY: MCE	DRAWN BY: MTJ	DESIGNED BY: MTJ

WWDC–NEW FORK RIVER WATERSHED
MASTER PLAN–LEVEL I STUDY
RICH STEEGE (18" STIPA DITCH DIVERSION REHAB)
LOCATED IN SECTION 5, T.33N., R.109W.,
SUBLETTE COUNTY, WY

RIO VERDE ENGINEERING
(307) 367-2826
FAX# (307)-367-2546
PINEDALE, WYOMING

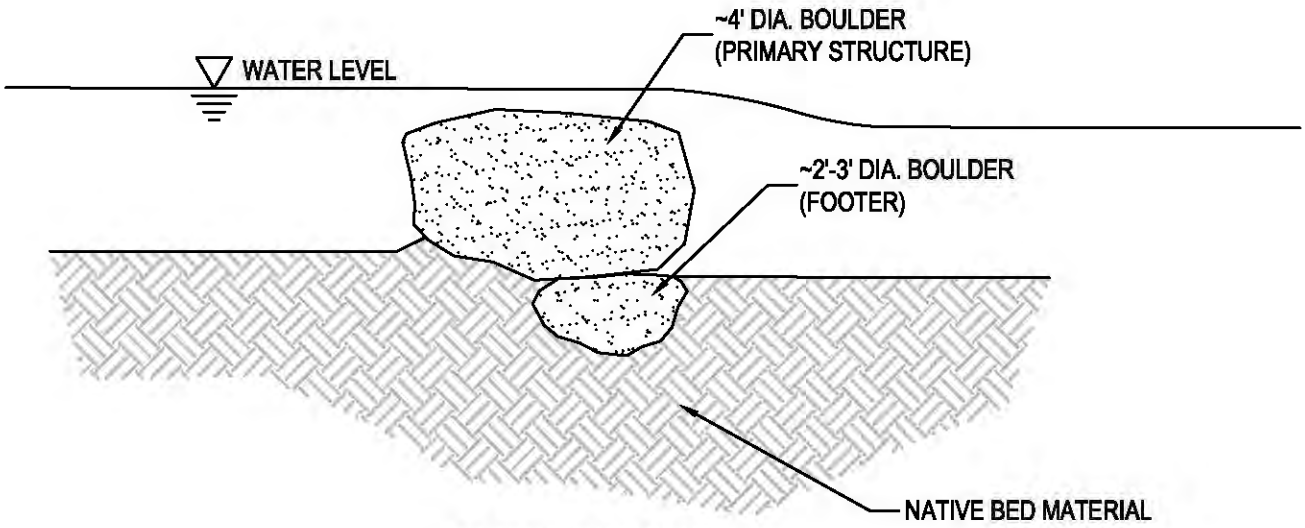

X-SECTION VIEW

N.T.S.

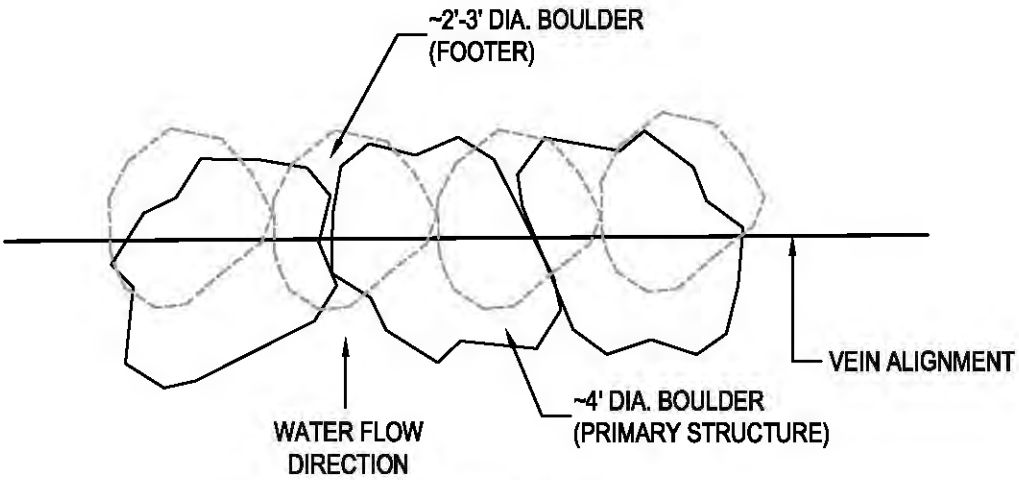

PLAN VIEW

N.T.S.

DESIGNED BY:
DRAWN BY: MTJ
CHECKED BY: MCE
DATE: 7/07/17
REV:
JOB NO: 4183
PAGE: 3 OF 3

STANDARD DETAIL
ROCK VEIN CONSTRUCTION

RIO VERDE ENGINEERING
(307) 367-2826
FAX# (307)-367-2548
PINEDALE, WYOMING

NEW FORK RIVER WATERSHED STUDY LEVEL I

Owner/Operator: Steege, Rich
Project Type: Irrigation
Project ID: 10
Project Name: Stipa Ditch Overflow Diversion Rehabilitation Project
Location (PLSS): Sec. 5, T.33N., R.109W.
Location (Lat/Long): 42.85919°, 109.88713°

PROJECT COMPONENTS - ITEMIZED COSTS

ITEM No.	DESCRIPTION	QUANTITY	UNIT	UNIT COST	TOTAL COST
1	Mobilization	1	LS	$ 250.00	$ 250.00
2	Bonds	1	LS	$ 100.00	$ 100.00
2	Misc. Excavation & Placement	20	CY	$ 20.00	$ 400.00
3	Salvage & Reset 36" CMP/Diversion	1	LS	$ 800.00	$ 800.00
4	36" Connecting Band	1	EA	$ 120.00	$ 120.00
5	Geo-Fabric	15	SY	$ 4.50	$ 67.50
6	Rip-Rap (Angular)	10	CY	$ 32.00	$ 320.00
				TOTAL COMPONENT COST (SUBTOTAL #2):	$ 2,057.50

PREPARATION OF FINAL DESIGNS & SPECIFICATIONS:	$ 300.00
PERMITTING AND MITIGATION:	$ -
LEGAL FEES:	$ 300.00
ACQUISTION OF ACCESS AND RIGHTS-OF-WAY:	$ 300.00
PRE-CONSTRUCTION COSTS (**SUBTOTAL #1**):	$ 900.00
TOTAL COMPONENT COST **(SUBTOTAL #2**):	$ 2,057.50
CONSTRUCTION ENGINEERING COST (SUBTOTAL #2 x 10%):	$ 205.75
COMPONENTS AND ENGINEERING COSTS (**SUBTOTAL #3**):	$ 2,263.25
CONTINGENCY (SUBTOTAL #3 X 15%):	$ 339.49
TOTAL CONSTRUCTION COST (**SUBTOTAL #4**):	$ 2,602.74
TOTAL PROJECT COST (**SUBTOTAL #1 + SUBTOTAL #4**):	**$ 3,502.74**

EXISTING CHECK STRUCTURE
(LOOKING DOWNSTREAM)

EXISTING CHECK STRUCTURE
(LOOKING SOUTH)

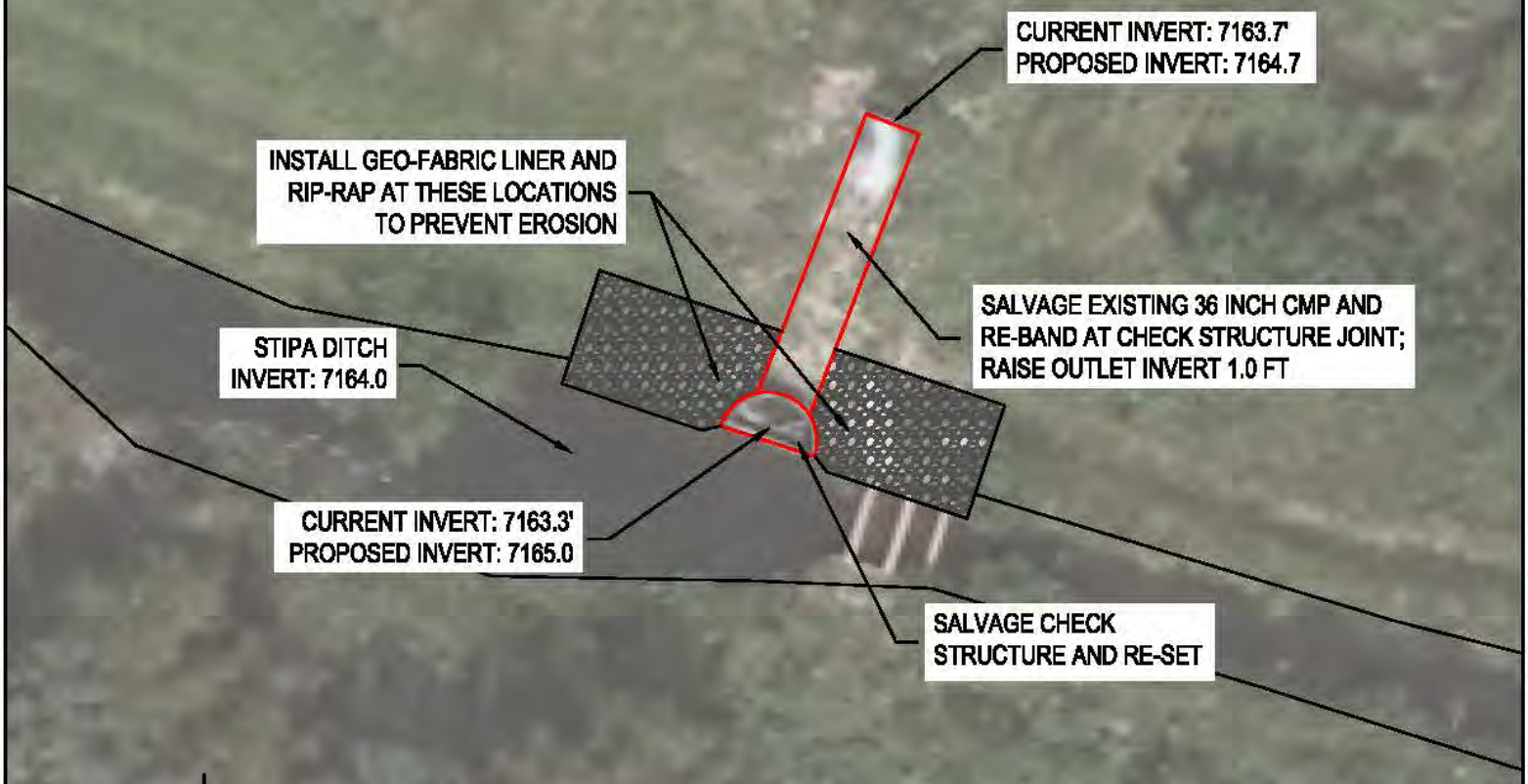

PLAN VIEW

SCALE: 1"=10'

DESIGNED BY: MTJ	WWDC–NEW FORK RIVER WATERSHED MASTER PLAN–LEVEL I STUDY
DRAWN BY: MTJ	RICH STEEGE (STIPA DITCH OVERFLOW DIV. REHAB)
CHECKED BY: MCE	LOCATED IN SECTION 5, T.33N., R.109W.,
DATE: 7/05/17	SUBLETTE COUNTY, WY
REV:	
JOB NO: 4183	
PAGE: 1 OF 1	

RIO VERDE ENGINEERING
(307) 367-2826
FAX# (307)-367-2546
PINEDALE, WYOMING

NEW FORK RIVER WATERSHED STUDY LEVEL I

Owner/Operator: Steege, Rich
Project Type: Irrigation
Project ID: 12
Project Name: Stipa Ditch Sluffing Mitigation Project
Location (PLSS): Sec. 5, T.33N., R.109W.
Location (Lat/Long): 42.85483°, 109.88476°

PROJECT COMPONENTS - ITEMIZED COSTS

ITEM No.	DESCRIPTION	QUANTITY	UNIT	UNIT COST	TOTAL COST
1	Mobilization	1	LS	$ 1,200.00	$ 1,200.00
2	Bonds	1	LS	$ 500.00	$ 500.00
2	18" ADS N-12 Pipe (Installed)	350	LF	$ 38.00	$ 13,300.00
3	Trash Rack / Cutoff Headwall	1	LS	$ 720.00	$ 720.00
				TOTAL COMPONENT COST (SUBTOTAL #2):	$ 15,720.00

PREPARATION OF FINAL DESIGNS & SPECIFICATIONS:	$ 1,200.00
PERMITTING AND MITIGATION:	$ -
LEGAL FEES:	$ 800.00
ACQUISTION OF ACCESS AND RIGHTS-OF-WAY:	$ 600.00
PRE-CONSTRUCTION COSTS (**SUBTOTAL #1**):	$ 2,600.00
TOTAL COMPONENT COST **(SUBTOTAL #2**):	$ 15,720.00
CONSTRUCTION ENGINEERING COST (SUBTOTAL #2 x 10%):	$ 1,572.00
COMPONENTS AND ENGINEERING COSTS (**SUBTOTAL #3**):	$ 17,292.00
CONTINGENCY (SUBTOTAL #3 X 15%):	$ 2,593.80
TOTAL CONSTRUCTION COST (**SUBTOTAL #4**):	$ 19,885.80
TOTAL PROJECT COST (**SUBTOTAL #1 + SUBTOTAL #4**):	**$ 22,485.80**

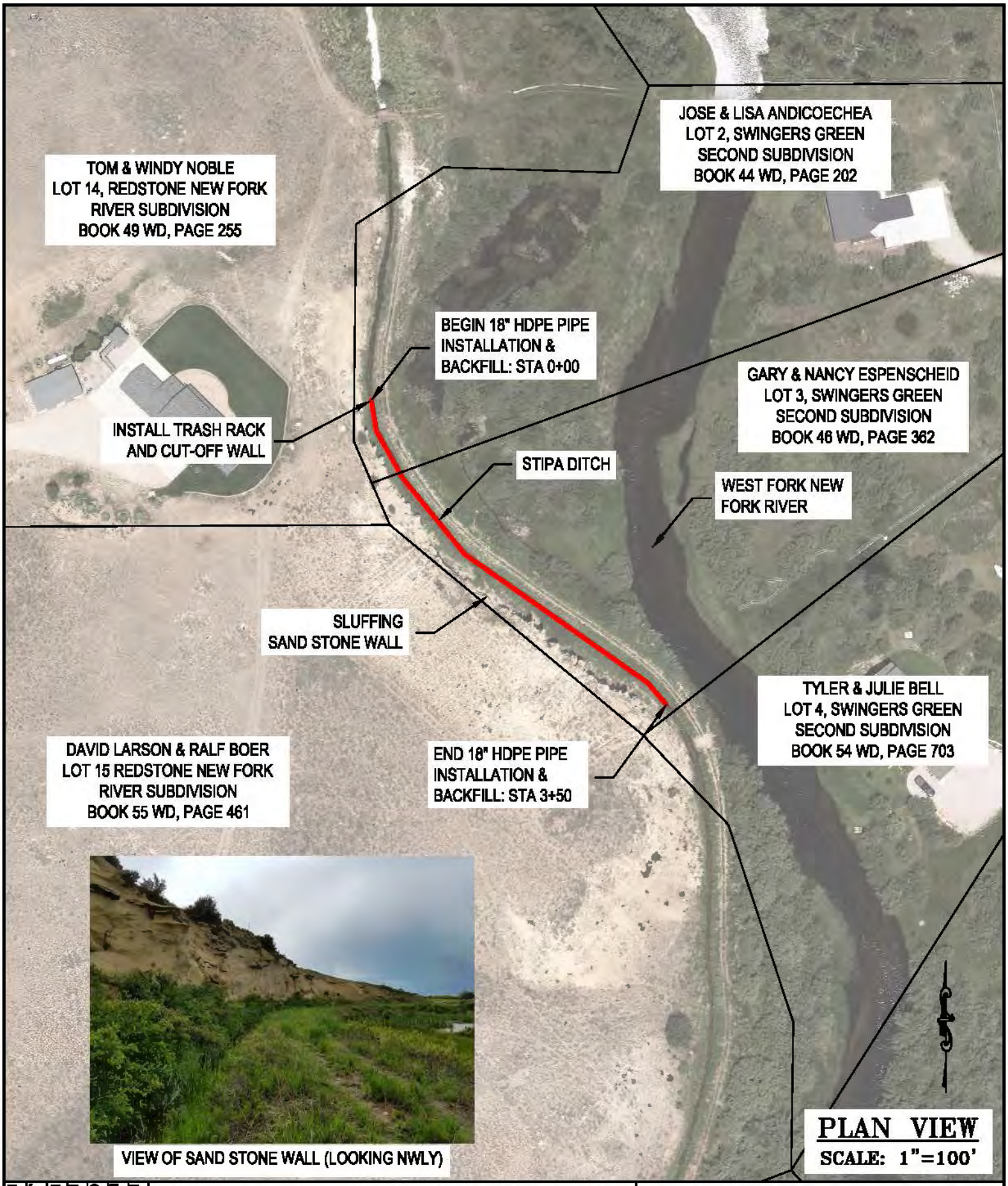

DESIGNED BY: MTJ
DRAWN BY: MTJ
CHECKED BY: MCE
DATE: 7/05/17
REV:
JOB NO: 4183
PAGE: 1 OF 1

WWDC–NEW FORK RIVER WATERSHED
MASTER PLAN–LEVEL I STUDY
RICH STEEGE (STIPA DITCH SLUFFING MITIGATION)
LOCATED IN SECTION 5, T.33N., R.109W.,
SUBLETTE COUNTY, WY

RIO VERDE ENGINEERING
(307) 367-2828
FAX# (307)-367-2546
PINEDALE, WYOMING

PROJECT STAKEHOLDER

WILLOW CREEK RANCH

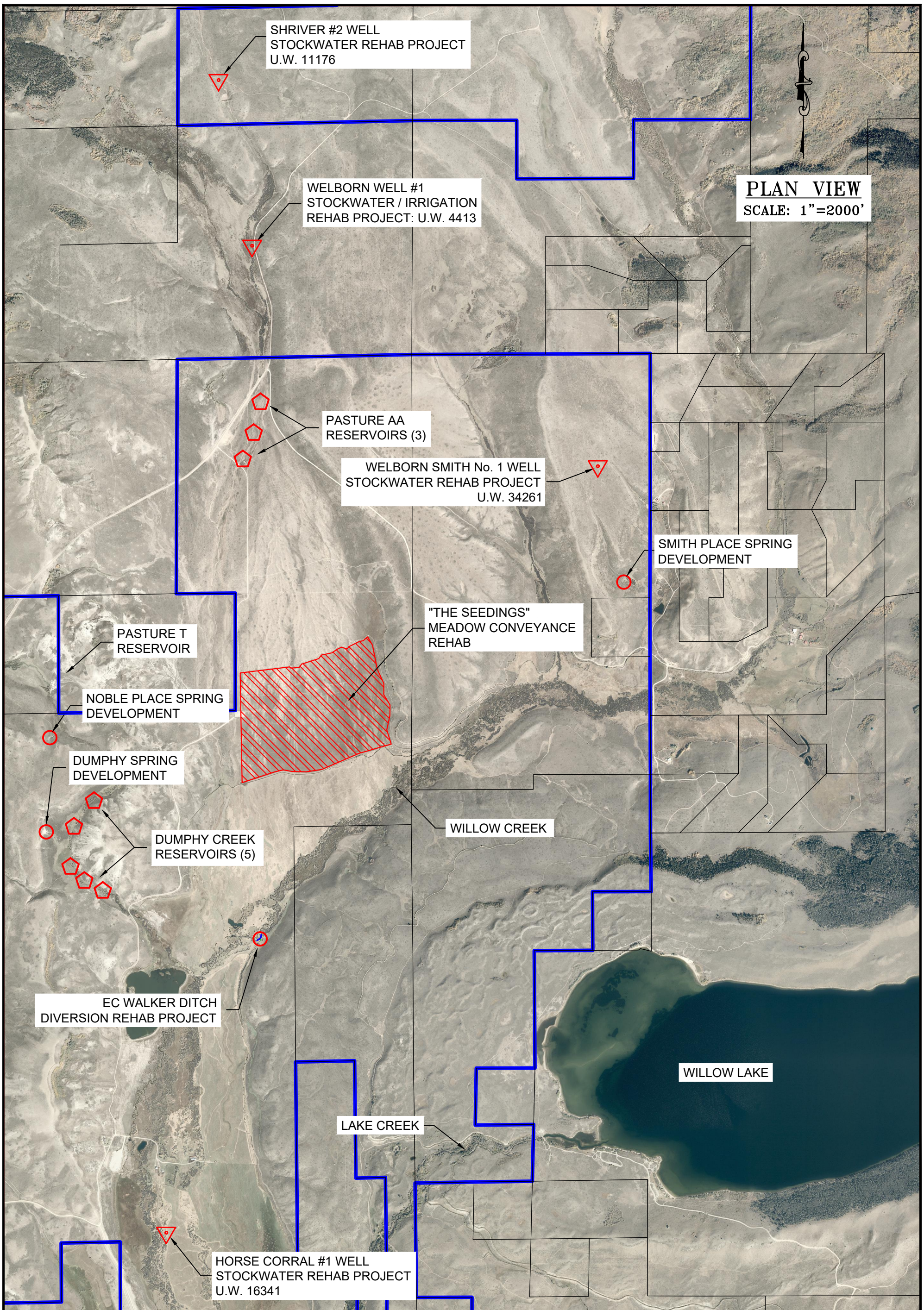

DESIGNED BY:
DRAWN BY: MTJ
CHECKED BY: MCE
DATE: 9/22/16
REV:
JOB NO: 4183
PAGE: 1 OF 1

WWDC–NEW FORK RIVER WATERSHED MASTER PLAN–LEVEL I STUDY

(WILLOW CREEK RANCH WATER PROJECTS)
LOCATED IN
SUBLETTE COUNTY, WYOMING

RIO VERDE ENGINEERING
(307) 367–2826
FAX# (307)–367–2546
PINEDALE, WYOMING

NEW FORK RIVER WATERSHED STUDY LEVEL I

Owner/Operator: Willow Creek Ranch
Project Type: Source Water Development
Project ID: 22
Project Name: Shriver # 2 Well Rehabilitation Project
Location (PLSS): Sec. 25, T.36N., R.110W.
Location (Lat/Long): 43.05843°, 109.93663°

PROJECT COMPONENTS - ITEMIZED COSTS

ITEM No.	DESCRIPTION	QUANTITY	UNIT	UNIT COST	TOTAL COST
1	Mobilization	1	LS	$ 3,000.00	$ 3,000.00
2	Bonds	1	LS	$ 500.00	$ 500.00
2	Well Re-Development	100	LF	$ 65.00	$ 6,500.00
3	Pump Test	1	LS	$ 3,500.00	$ 3,500.00
4	Submersible Pump & Equipment	1	LS	$ 1,800.00	$ 1,800.00
5	Solar Array (Complete)	1	LS	$ 5,200.00	$ 5,200.00
6	4-Rail Pole Fence	90	LF	$ 8.50	$ 765.00
7	2,000 Gal Tire Trough (Complete)	1	LS	$ 10,000.00	$ 10,000.00
8	1-1/4" SDR 11 Pipe	55	LF	$ 3.05	$ 167.75
9	4" SDR 11 Pipe	50	LF	$ 6.95	$ 347.50
				TOTAL COMPONENT COST (SUBTOTAL #2):	$ 31,780.25

PREPARATION OF FINAL DESIGNS & SPECIFICATIONS:	$ 1,200.00
PERMITTING AND MITIGATION:	$ 450.00
LEGAL FEES:	$ -
ACQUISTION OF ACCESS AND RIGHTS-OF-WAY:	$ -
PRE-CONSTRUCTION COSTS (**SUBTOTAL #1**):	$ 1,650.00
TOTAL COMPONENT COST **(SUBTOTAL #2**):	$ 31,780.25
CONSTRUCTION ENGINEERING COST (SUBTOTAL #2 x 10%):	$ 3,178.03
COMPONENTS AND ENGINEERING COSTS (**SUBTOTAL #3**):	$ 34,958.28
CONTINGENCY (SUBTOTAL #3 X 15%):	$ 5,243.74
TOTAL CONSTRUCTION COST (**SUBTOTAL #4**):	$ 40,202.02
TOTAL PROJECT COST (**SUBTOTAL #1 + SUBTOTAL #4**):	**$ 41,852.02**

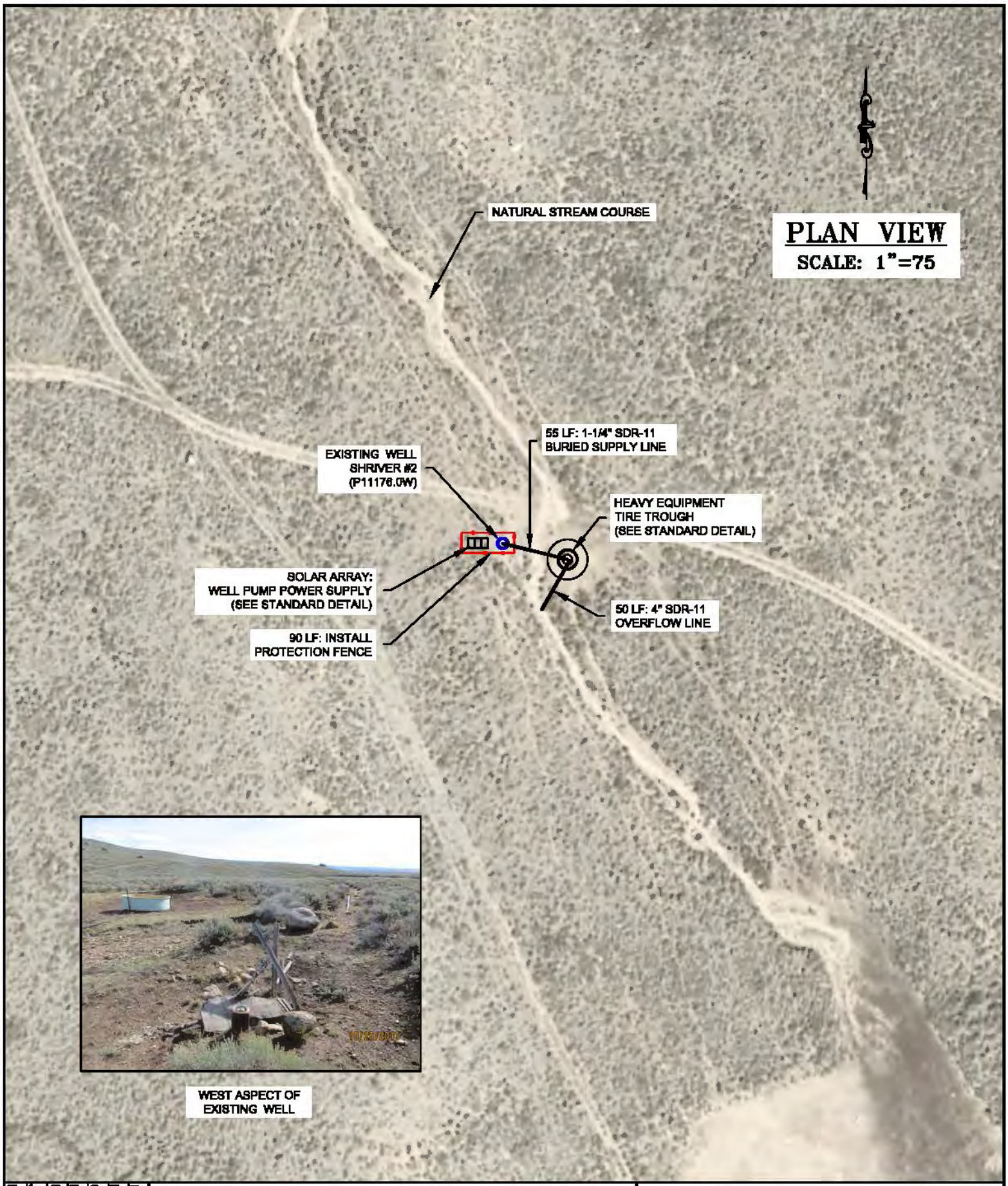

DESIGNED BY: MTJ
DRAWN BY: MTJ
CHECKED BY: MCE
DATE: 6/2/17
REV:
JOB NO: 4183
PAGE: 1 OF 1

WWDC–NEW FORK RIVER WATERSHED
MASTER PLAN–LEVEL I STUDY

WILLOW CREEK RANCH (SHRIVER #2 WELL REHAB)
LOCATED IN SECTION 25, T.36N., R.110W.,
SUBLETTE COUNTY, WY

RIO VERDE ENGINEERING
(307) 367-2828
FAX# (307)-367-2546
PINEDALE, WYOMING

DISCLAIMER:

FIELD VERIFICATION IS NEEDED REGARDING WATER ZONES, STATIC WATER LEVEL, WATER YIELD, & DRAW DOWN. ACTUAL WELL DEPTHS AND POWER REQUIREMENTS WILL VARY.

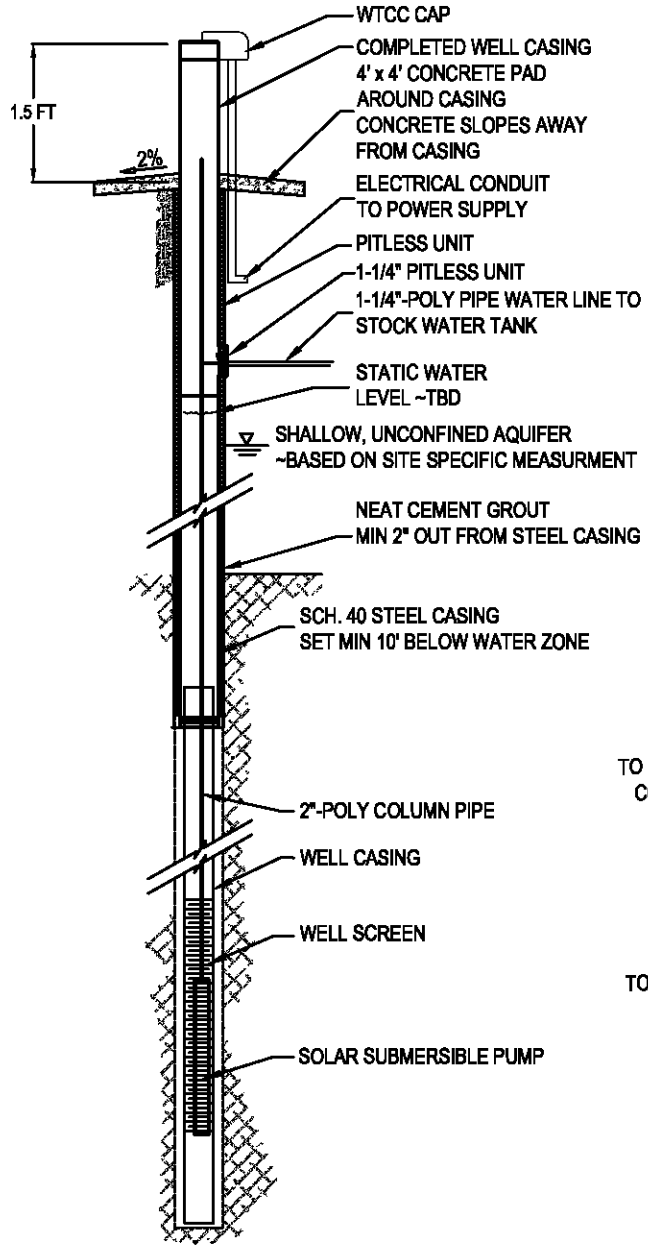

TYPICAL WELL

NOT TO SCALE

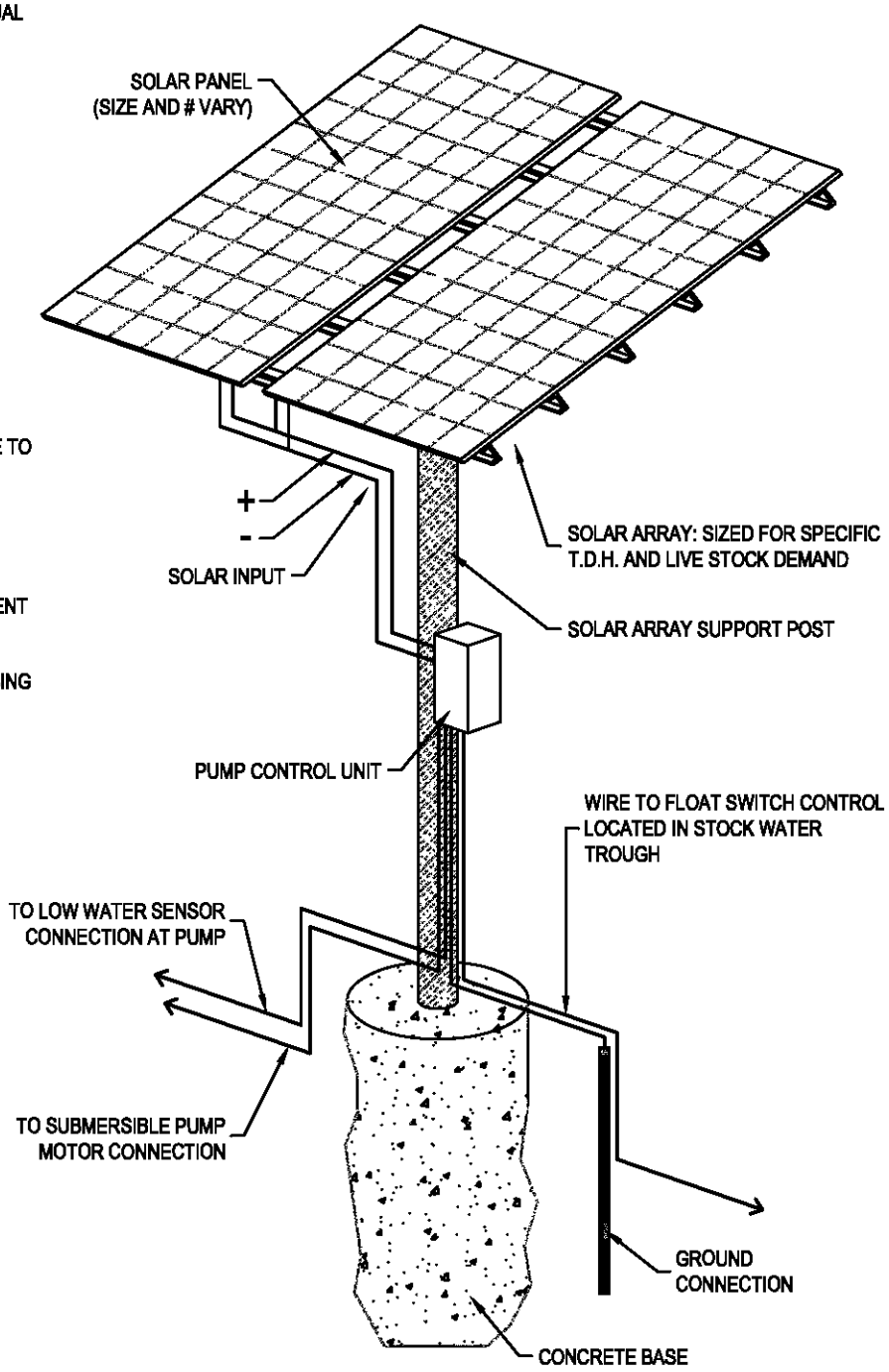

TYPICAL SOLAR ARRAY

NOT TO SCALE

DESIGNED BY:	
DRAWN BY: MTJ	
CHECKED BY: MCE	
DATE: 6/05/17	
REV:	
JOB NO: 4183	
PAGE: 1 OF 1	

STANDARD DETAIL
SOLAR POWERED STOCK WATERING SYSTEM

RIO VERDE ENGINEERING
(307) 367-2826
FAX# (307)-367-2546
PINEDALE, WYOMING

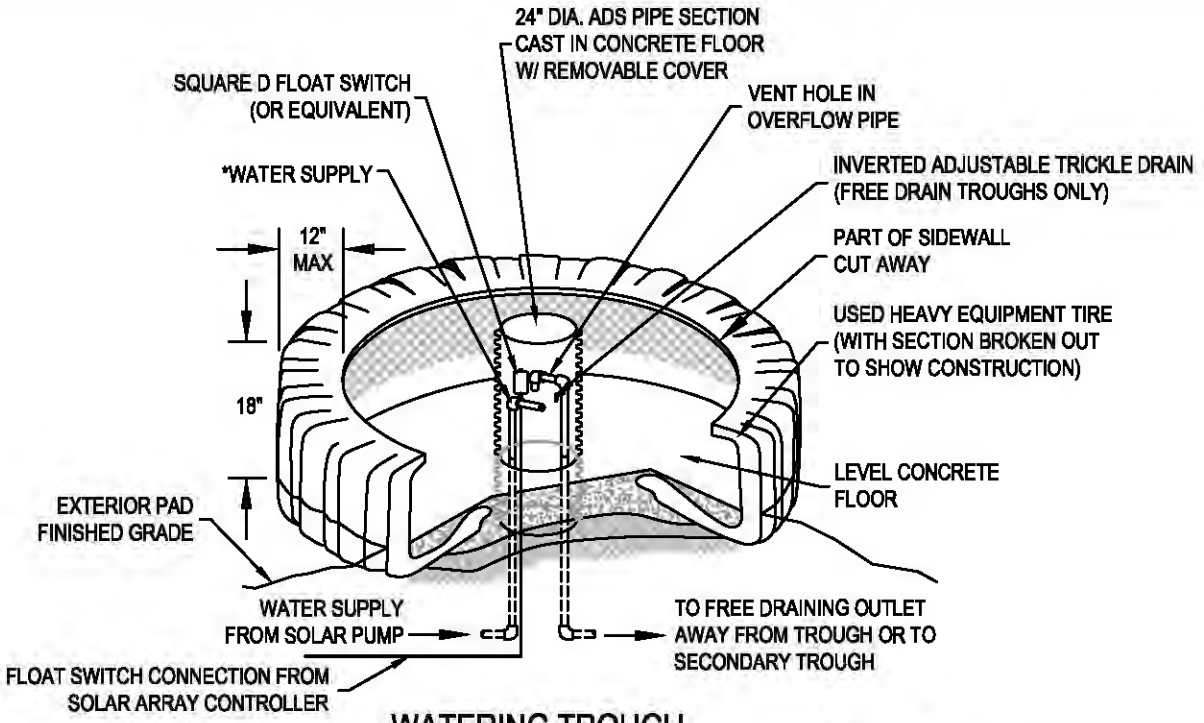

WATERING TROUGH
ISOMETRIC VIEW
N.T.S.

INFLOW PIPE DIA. - 1-1/2" (PRESSURE)

OVERFLOW PIPE DIA. - 4 IN.

CONCRETE SLAB THICKNESS - 6 IN.

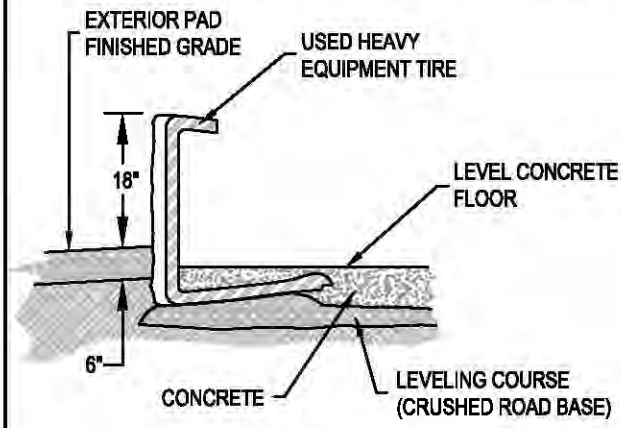

SECTION VIEW
N.T.S.

*TO REDUCE FREEZING, POINT THE INFLOW IN THE DIRECTION THAT WILL CAUSE THE MOST WATER MOVEMENT.

INSTALLATION NOTES

1.) CUT AWAY PART OF SIDEWALL. THIS WILL BE THE TOP OF THE TROUGH

2.) USE THE CRUSHED ROAD BASE TO FILL AROUND THE PIPES AND TO LEVEL THE TIRE.

3.) POUR CONCRETE AROUND ADS PIPE, WATER SUPPLY, OVERFLOW PIPES AND WORK UNDER INTERIOR EDGE OF TIRE. FINISH THE TOP SURFACE OF CONCRETE TO FORM A LEVEL PAD ACROSS THE TROUGH BOTTOM.

4.) PROVIDE AN ESCAPE DEVICE FOR SMALL BIRDS AND ANIMALS THAT MAY BECOME ENTRAPPED. A RAMP CONSTRUCTED OF A PIECE OF EXPANDED METAL EXTENDING FROM THE WATER SURFACE TO THE TOP SIDEWALL OR A FLOAT CONSISTING OF A PIECE OF LUMBER ARE TWO DEVICES THAT COULD BE USED.

5.) EXTEND CRUSHED ROAD BASE PAD 6 FT. OUT FROM EXTERIOR TIRE EDGE

*DESIGN BASED ON NRCS STANDARDIZED DRAWING AND DESIGN INPUT FROM BROGAN HYDROLOGIC CONSULTING. DESIGN MUST BE ADAPTED TO MEET SITE SPECIFIC CONDITIONS.

PAGE: 1 OF 1	
JOB NO: 4183	
REV:	
DATE: 4/21/17	
CHECKED BY: MCE	
DRAWN BY: MTJ	
DESIGNED BY:	

STANDARD DETAIL
HEAVY EQUIPMENT TIRE TROUGH

U.S.D.A. NATURAL RESOURCES CONSERVATION SERVICE

RIO VERDE ENGINEERING
(307) 367-2826
FAX (307)-367-2846 PINEDALE, WYOMING

NEW FORK RIVER WATERSHED STUDY LEVEL I

Owner/Operator: Willow Creek Ranch
Project Type: Source Water Development
Project ID: 23
Project Name: Welborn Smith No. 1 Well Rehabilitation Project
Location (PLSS): Sec. 6, T.35N., R.109W.
Location (Lat/Long): 43.03469°, 109.90459°

PROJECT COMPONENTS - ITEMIZED COSTS

ITEM No.	DESCRIPTION	QUANTITY	UNIT	UNIT COST	TOTAL COST
1	Mobilization	1	LS	$ 3,000.00	$ 3,000.00
2	Bonds	1	LS	$ 500.00	$ 500.00
2	Well Re-Development	300	LF	$ 65.00	$ 19,500.00
3	Pump Test	1	LS	$ 3,500.00	$ 3,500.00
4	Submersible Pump & Equipment	1	LS	$ 2,600.00	$ 2,600.00
5	Solar Array (Complete)	1	LS	$ 5,200.00	$ 5,200.00
6	4-Rail Pole Fence	100	LF	$ 8.50	$ 850.00
7	2,000 Gal Tire Trough (Complete)	1	LS	$ 10,000.00	$ 10,000.00
8	1-1/4" SDR 11 Pipe	60	LF	$ 3.05	$ 183.00
9	4" SDR 11 Pipe	200	LF	$ 6.95	$ 1,390.00
				TOTAL COMPONENT COST (SUBTOTAL #2):	$ 46,723.00

PREPARATION OF FINAL DESIGNS & SPECIFICATIONS:	$ 1,200.00
PERMITTING AND MITIGATION:	$ 500.00
LEGAL FEES:	$ -
ACQUISTION OF ACCESS AND RIGHTS-OF-WAY:	$ -
PRE-CONSTRUCTION COSTS (**SUBTOTAL #1**):	$ 1,700.00
TOTAL COMPONENT COST **(SUBTOTAL #2**):	$ 46,723.00
CONSTRUCTION ENGINEERING COST (SUBTOTAL #2 x 10%):	$ 4,672.30
COMPONENTS AND ENGINEERING COSTS (**SUBTOTAL #3**):	$ 51,395.30
CONTINGENCY (SUBTOTAL #3 X 15%):	$ 7,709.30
TOTAL CONSTRUCTION COST (**SUBTOTAL #4**):	$ 59,104.60
TOTAL PROJECT COST (**SUBTOTAL #1 + SUBTOTAL #4**):	**$ 60,804.60**

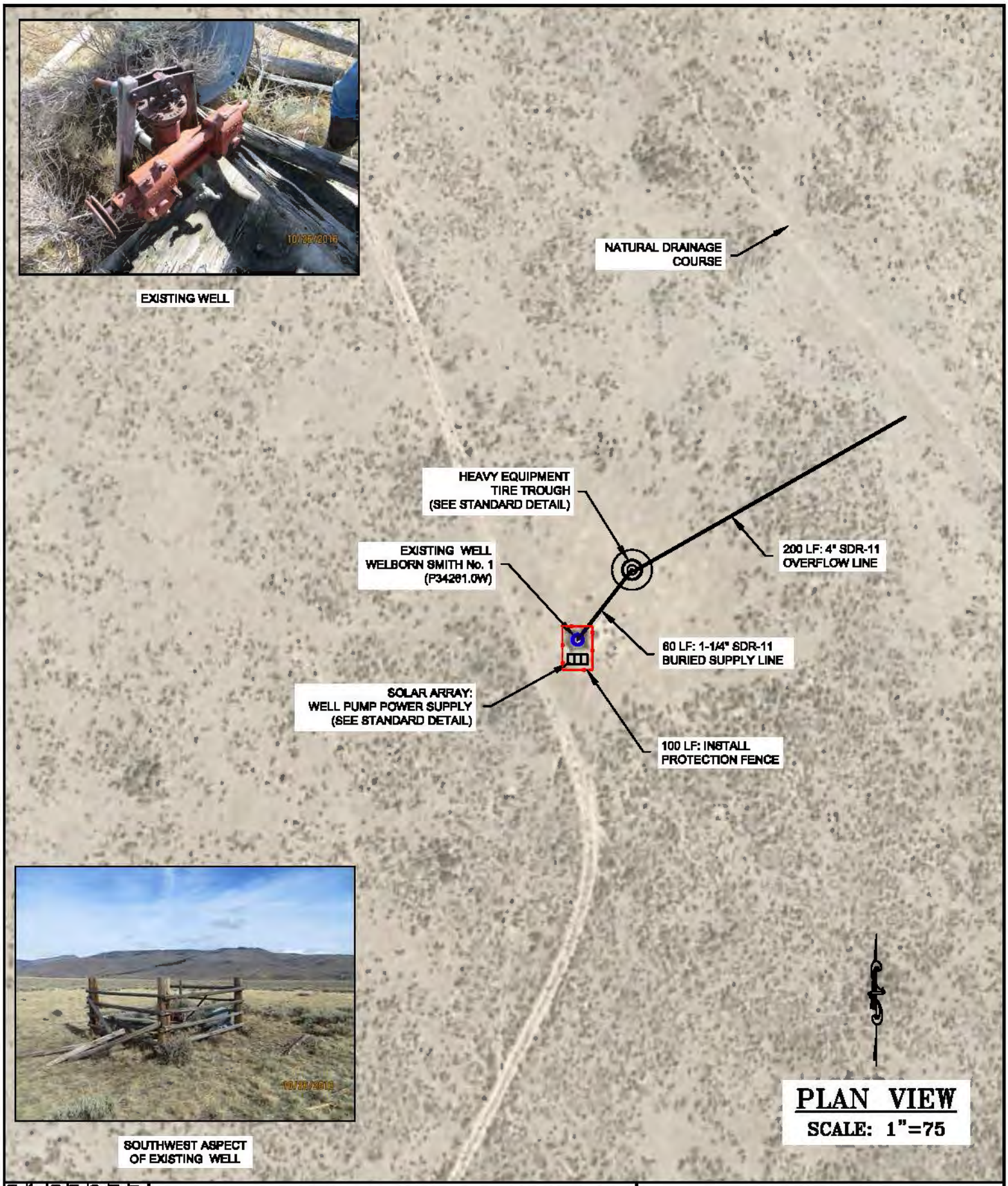

PLAN VIEW

SCALE: 1"=75

DESIGNED BY: MTJ	WWDC–NEW FORK RIVER WATERSHED MASTER PLAN–LEVEL I STUDY
DRAWN BY: MTJ	WILLOW CREEK RANCH (WELBORN SMITH No. 1 WELL)
CHECKED BY: MCE	LOCATED IN SECTION 6, T.35N., R.109W.,
DATE: 6/5/17	SUBLETTE COUNTY, WY
REV:	
JOB NO: 4183	
PAGE: 1 OF 1	

RIO VERDE ENGINEERING
(307) 367-2828
FAX# (307)-367-2546
PINEDALE, WYOMING

DISCLAIMER:

FIELD VERIFICATION IS NEEDED REGARDING WATER ZONES, STATIC WATER LEVEL, WATER YIELD, & DRAW DOWN. ACTUAL WELL DEPTHS AND POWER REQUIREMENTS WILL VARY.

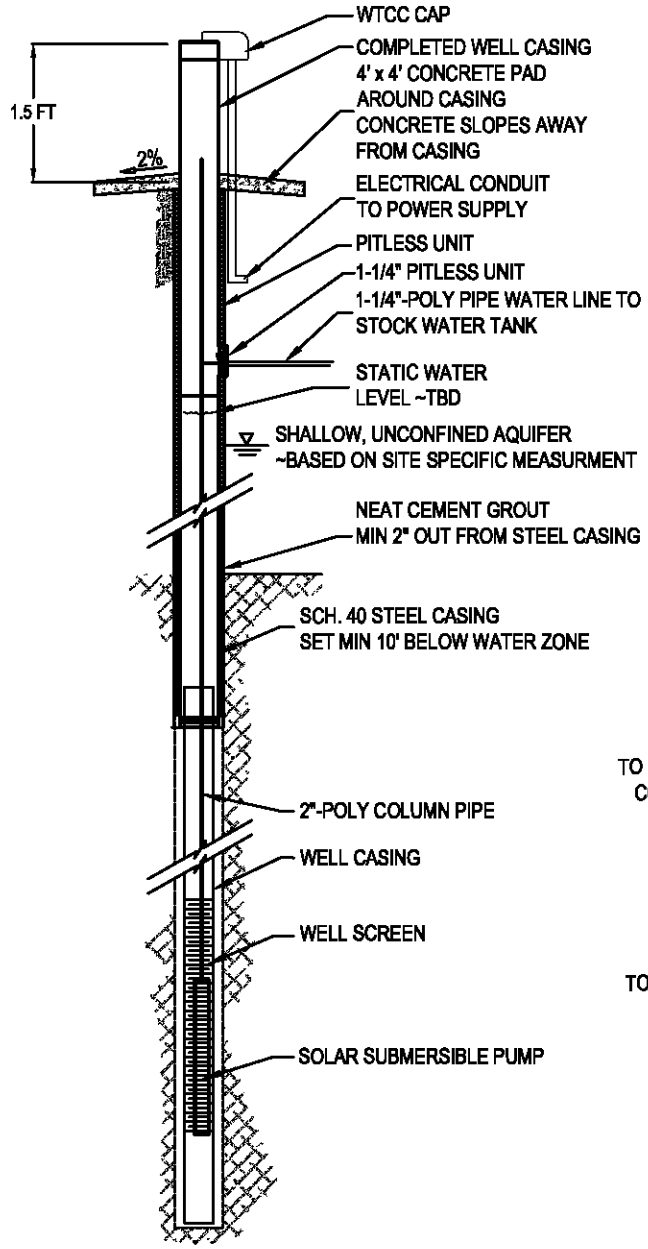

TYPICAL WELL

NOT TO SCALE

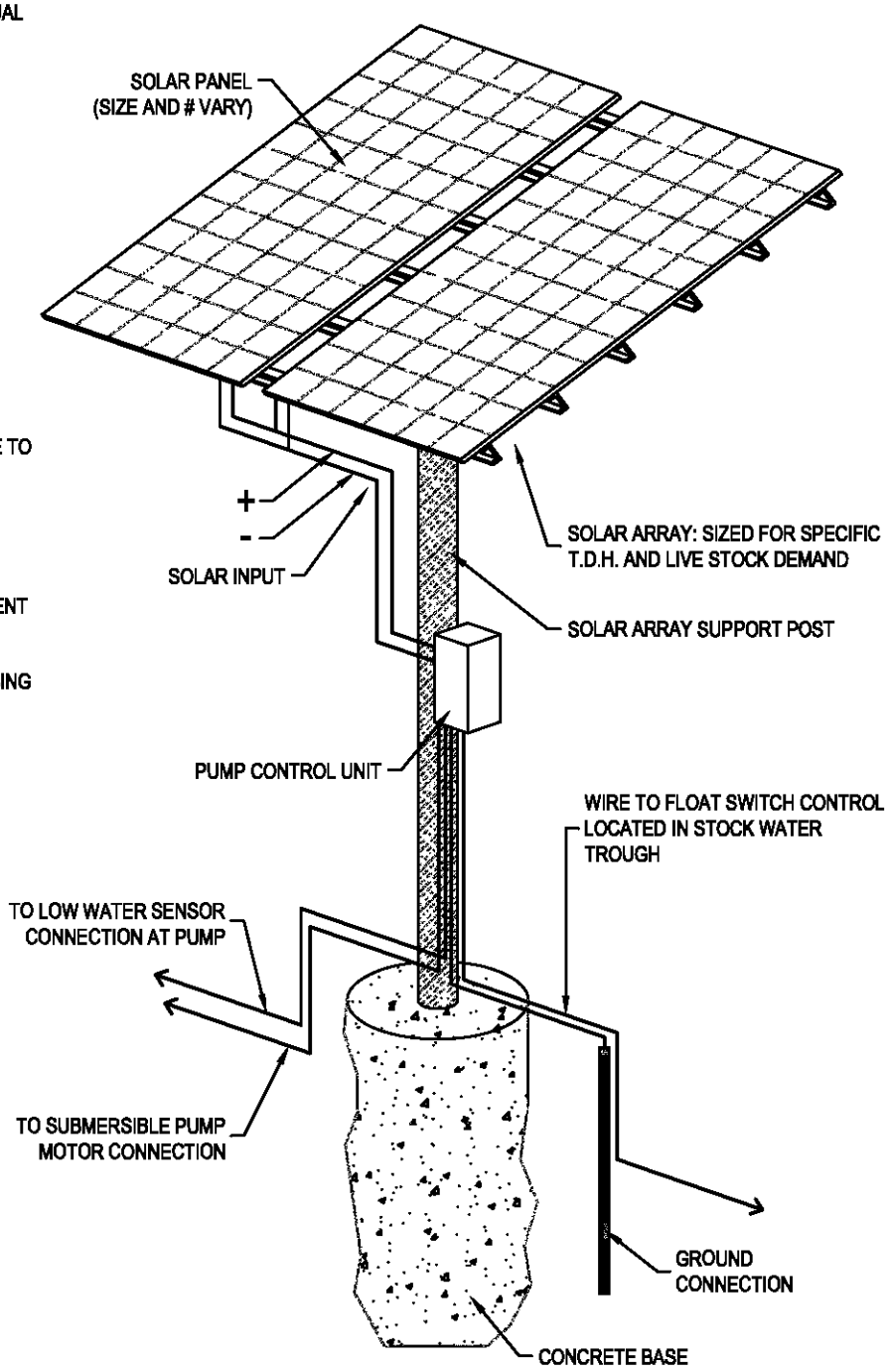

TYPICAL SOLAR ARRAY

NOT TO SCALE

DESIGNED BY:	
DRAWN BY: MTJ	
CHECKED BY: MCE	
DATE: 6/05/17	
REV:	
JOB NO: 4183	
PAGE: 1 OF 1	

STANDARD DETAIL
SOLAR POWERED STOCK WATERING SYSTEM

RIO VERDE ENGINEERING
(307) 367-2826
FAX# (307)-367-2546
PINEDALE, WYOMING

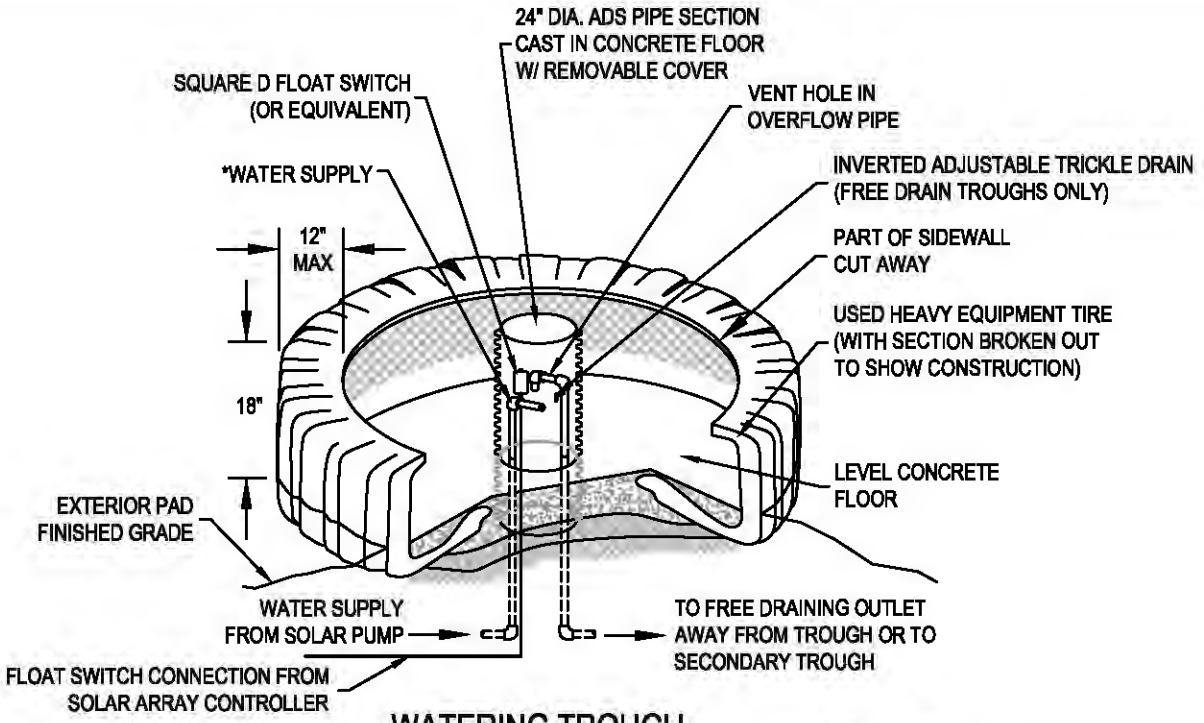

WATERING TROUGH
ISOMETRIC VIEW
N.T.S.

INFLOW PIPE DIA. - 1-1/2" (PRESSURE)

OVERFLOW PIPE DIA. - 4 IN.

CONCRETE SLAB THICKNESS - 6 IN.

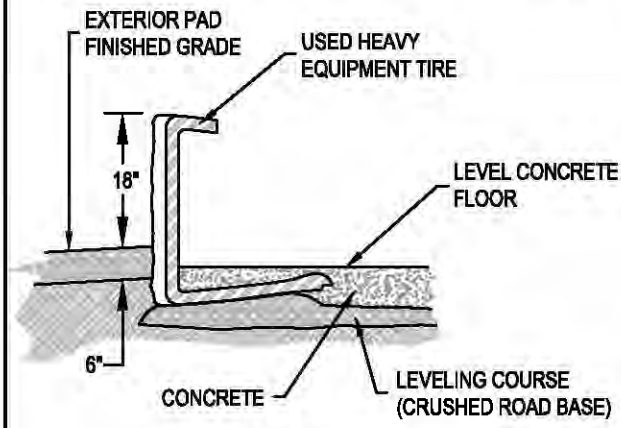

SECTION VIEW
N.T.S.

*TO REDUCE FREEZING, POINT THE INFLOW IN THE DIRECTION THAT WILL CAUSE THE MOST WATER MOVEMENT.

INSTALLATION NOTES

1.) CUT AWAY PART OF SIDEWALL. THIS WILL BE THE TOP OF THE TROUGH

2.) USE THE CRUSHED ROAD BASE TO FILL AROUND THE PIPES AND TO LEVEL THE TIRE.

3.) POUR CONCRETE AROUND ADS PIPE, WATER SUPPLY, OVERFLOW PIPES AND WORK UNDER INTERIOR EDGE OF TIRE. FINISH THE TOP SURFACE OF CONCRETE TO FORM A LEVEL PAD ACROSS THE TROUGH BOTTOM.

4.) PROVIDE AN ESCAPE DEVICE FOR SMALL BIRDS AND ANIMALS THAT MAY BECOME ENTRAPPED. A RAMP CONSTRUCTED OF A PIECE OF EXPANDED METAL EXTENDING FROM THE WATER SURFACE TO THE TOP SIDEWALL OR A FLOAT CONSISTING OF A PIECE OF LUMBER ARE TWO DEVICES THAT COULD BE USED.

5.) EXTEND CRUSHED ROAD BASE PAD 6 FT. OUT FROM EXTERIOR TIRE EDGE

*DESIGN BASED ON NRCS STANDARDIZED DRAWING AND DESIGN INPUT FROM BROGAN HYDROLOGIC CONSULTING. DESIGN MUST BE ADAPTED TO MEET SITE SPECIFIC CONDITIONS.

PAGE: 1 OF 1	
JOB NO: 4183	
REV:	
DATE: 4/21/17	
CHECKED BY: MCE	
DRAWN BY: MTJ	
DESIGNED BY:	

STANDARD DETAIL
HEAVY EQUIPMENT TIRE TROUGH

U.S.D.A. NATURAL RESOURCES CONSERVATION SERVICE

RIO VERDE ENGINEERING
(307) 367-2826
FAX (307)-367-2846 PINEDALE, WYOMING

NEW FORK RIVER WATERSHED STUDY LEVEL I

Owner/Operator: Willow Creek Ranch
Project Type: Source Water Development
Project ID: 24
Project Name: Horse Corral #1 Well Rehabilitation Project
Location (PLSS): Sec. 23, T.35N., R.110W.
Location (Lat/Long): 42.98708°, 109.94147°

PROJECT COMPONENTS - ITEMIZED COSTS

ITEM No.	DESCRIPTION	QUANTITY	UNIT	UNIT COST	TOTAL COST
1	Mobilization	1	LS	$ 2,800.00	$ 2,800.00
2	Bonds	1	LS	$ 500.00	$ 500.00
3	Well Re-Development	200	LF	$ 65.00	$ 13,000.00
4	Pump Test	1	EA	$ 3,500.00	$ 3,500.00
4	Submersible Pump & Equipment	1	LS	$ 2,300.00	$ 2,300.00
5	Transformer	1	LS	$ 4,500.00	$ 4,500.00
6	Power Line Trench & Conduit	60	LF	$ 4.00	$ 240.00
7	Meter Base	1	EA	$ 2,000.00	$ 2,000.00
8	750 gal Trough (Complete)	1	LS	$ 2,200.00	$ 2,200.00
10	1-1/4" SDR 11 Pipe	35	LF	$ 3.05	$ 106.75
11	4-Rail Pole Fence	30	LF	$ 8.50	$ 255.00
				TOTAL COMPONENT COST (SUBTOTAL #2):	$ 31,401.75

PREPARATION OF FINAL DESIGNS & SPECIFICATIONS:	$ 1,200.00
PERMITTING AND MITIGATION:	$ 450.00
LEGAL FEES:	$ -
ACQUISTION OF ACCESS AND RIGHTS-OF-WAY:	$ -
PRE-CONSTRUCTION COSTS (**SUBTOTAL #1**):	$ 1,650.00
TOTAL COMPONENT COST **(SUBTOTAL #2**):	$ 31,401.75
CONSTRUCTION ENGINEERING COST (SUBTOTAL #2 x 10%):	$ 3,140.18
COMPONENTS AND ENGINEERING COSTS (**SUBTOTAL #3**):	$ 34,541.93
CONTINGENCY (SUBTOTAL #3 X 15%):	$ 5,181.29
TOTAL CONSTRUCTION COST (**SUBTOTAL #4**):	$ 39,723.21
TOTAL PROJECT COST (**SUBTOTAL #1 + SUBTOTAL #4**):	**$ 41,373.21**

PLAN VIEW

SCALE: 1"=75

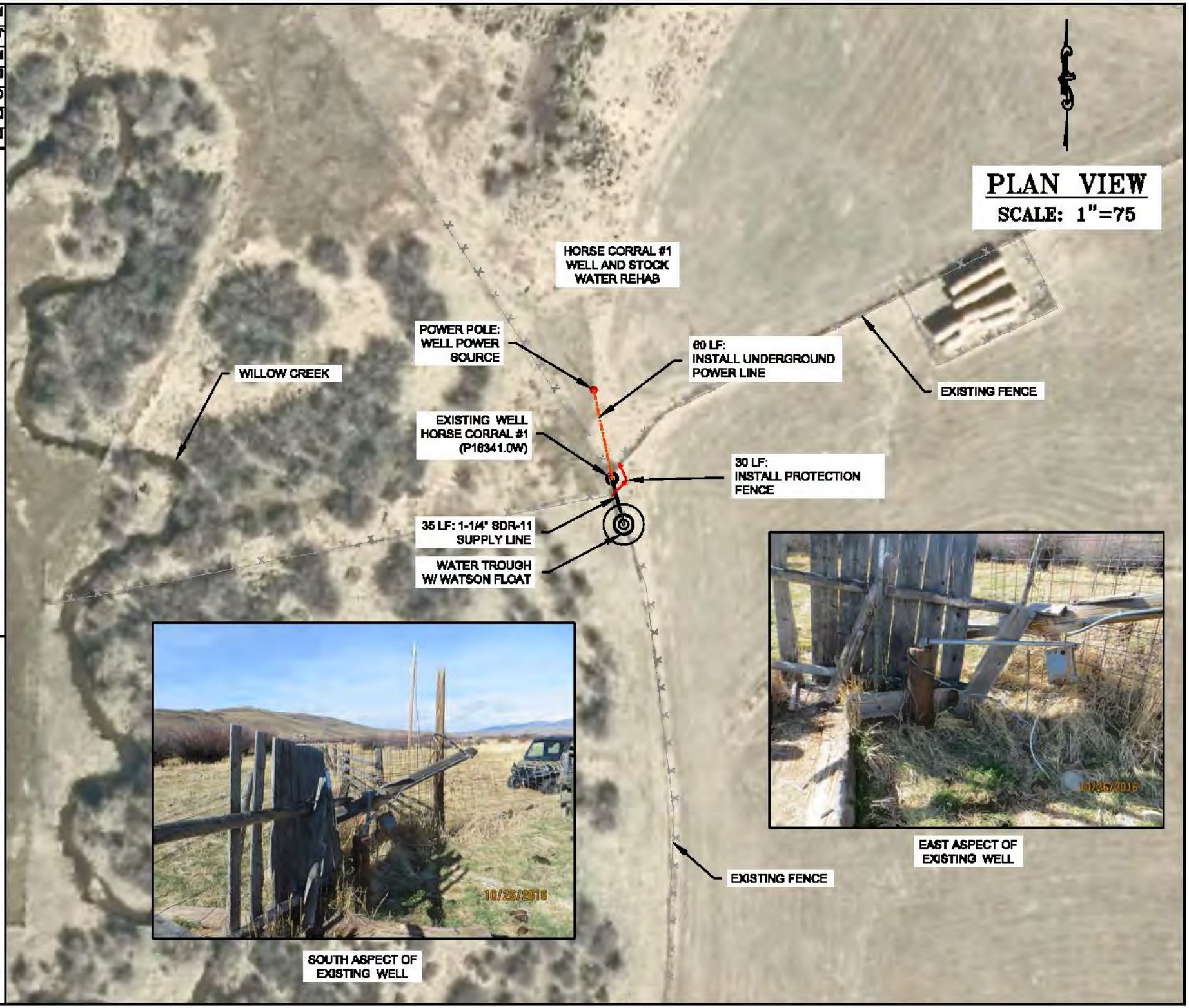

WWDC–NEW FORK RIVER WATERSHED

MASTER PLAN–LEVEL I STUDY

WILLOW CREEK RANCH (HORSE CORRAL #1 WELL)

LOCATED IN SECTION 23, T.35N., R.110W.,

SUBLETTE COUNTY, WY

RIO VERDE ENGINEERING

(307) 367-2826
FAX: (307)-367-2946

PINEDALE, WYOMING

DESIGNED BY: MTJ
DRAWN BY: MTJ
CHECKED BY: MCE
DATE: 6/2/17
REV:
JOB NO: 4185
PAGE: 1 OF 2

TYPICAL WELL

N.T.S.

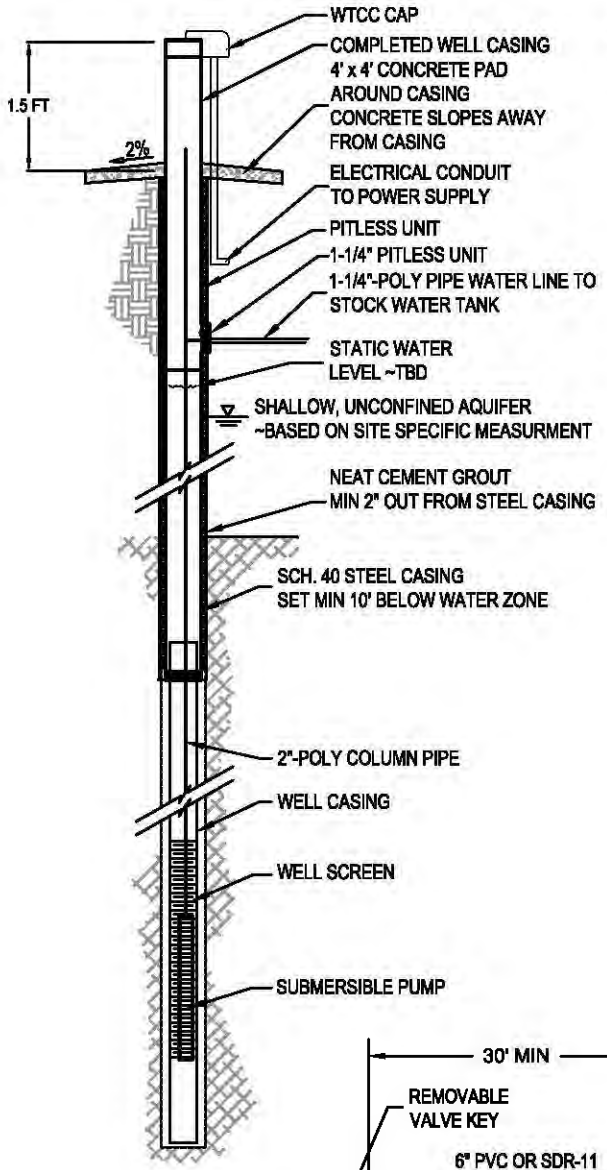

DISCLAIMER:

FIELD VERIFICATION IS NEEDED REGARDING WATER ZONES, STATIC WATER LEVEL, WATER YIELD, & DRAW DOWN. ACTUAL WELL DEPTHS AND POWER REQUIREMENTS WILL VARY.

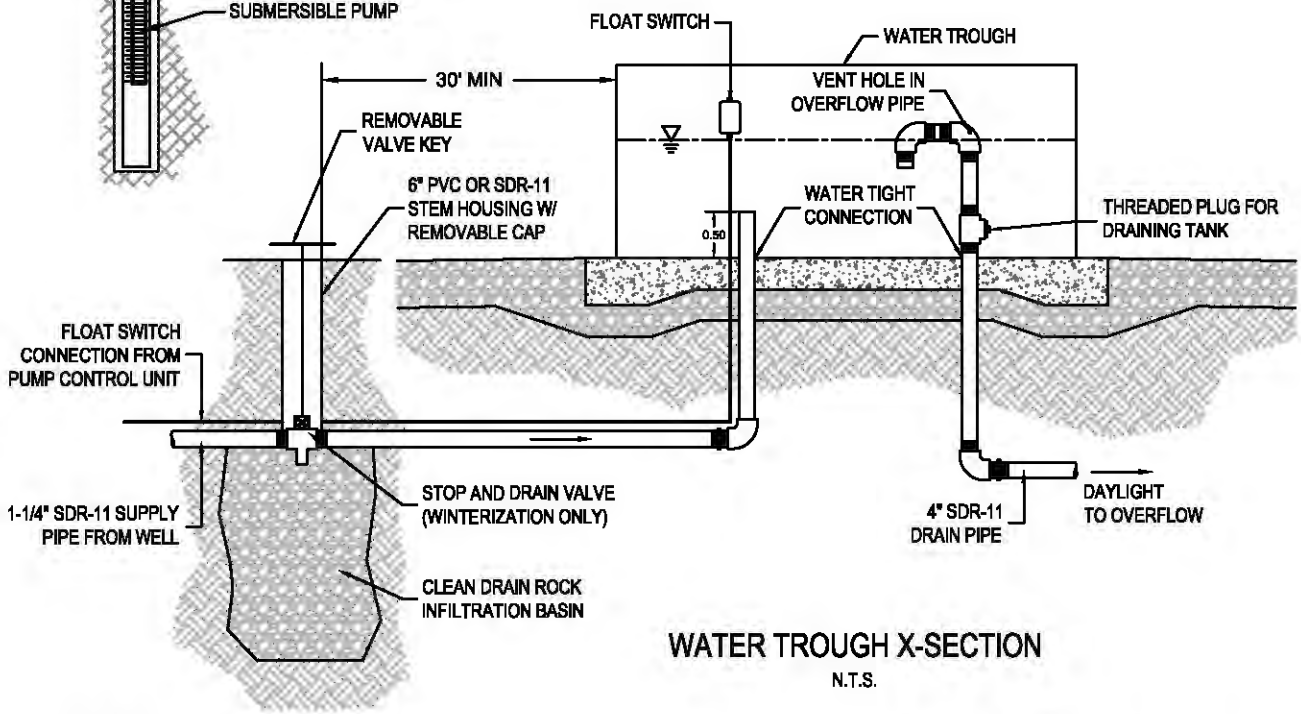

WATER TROUGH X-SECTION

N.T.S.

DESIGNED BY: MTJ	STANDARD DETAIL	RIO VERDE ENGINEERING
DRAWN BY: MTJ	TRADITIONAL PUMP SUPPLY & WATER TROUGH	(307) 367-2828 FAX# (307)-367-2546 PINEDALE, WYOMING
CHECKED BY: MCE		
DATE: 6/16/17		
REV:		
JOB NO: 4183		
PAGE: 1 OF 1		

NEW FORK RIVER WATERSHED STUDY LEVEL I

Owner/Operator: Willow Creek Ranch
Project Type: Source Water Development
Project ID: 25
Project Name: Welborn #1 Well Rehabilitation Project
Location (PLSS): Sec. 36, T.36N., R.110W.
Location (Lat/Long): 43.01196°, 109.95065°

PROJECT COMPONENTS - ITEMIZED COSTS

ITEM No.	DESCRIPTION	QUANTITY	UNIT	UNIT COST	TOTAL COST
1	Mobilization	1	LS	$ 1,000.00	$ 1,000.00
2	Bonds	1	LS	$ 300.00	$ 300.00
3	30" Float Chamber (Complete Installed)	1	LS	$ 2,850.00	$ 2,850.00
4	Well Diversion Plumbing & Valves	1	LS	$ 850.00	$ 850.00
5	2" SDR-11 Supply Line	270	LF	$ 3.75	$ 1,012.50
6	4" SDR-11 Drain Line	130	LF	$ 6.95	$ 903.50
7	4-Rail Pole Fence	180	LF	$ 8.50	$ 1,530.00
8	750 gal Trough (Complete)	1	LS	$ 2,600.00	$ 2,600.00
				TOTAL COMPONENT COST (SUBTOTAL #2):	$ 11,046.00

PREPARATION OF FINAL DESIGNS & SPECIFICATIONS:	$ 1,200.00
PERMITTING AND MITIGATION:	$ 800.00
LEGAL FEES:	$ -
ACQUISTION OF ACCESS AND RIGHTS-OF-WAY:	$ 300.00
PRE-CONSTRUCTION COSTS (**SUBTOTAL #1**):	$ 2,300.00
TOTAL COMPONENT COST **(SUBTOTAL #2**):	$ 11,046.00
CONSTRUCTION ENGINEERING COST (SUBTOTAL #2 x 10%):	$ 1,104.60
COMPONENTS AND ENGINEERING COSTS (**SUBTOTAL #3**):	$ 12,150.60
CONTINGENCY (SUBTOTAL #3 X 15%):	$ 1,822.59
TOTAL CONSTRUCTION COST (**SUBTOTAL #4**):	$ 13,973.19
TOTAL PROJECT COST (**SUBTOTAL #1 + SUBTOTAL #4**):	**$ 16,273.19**

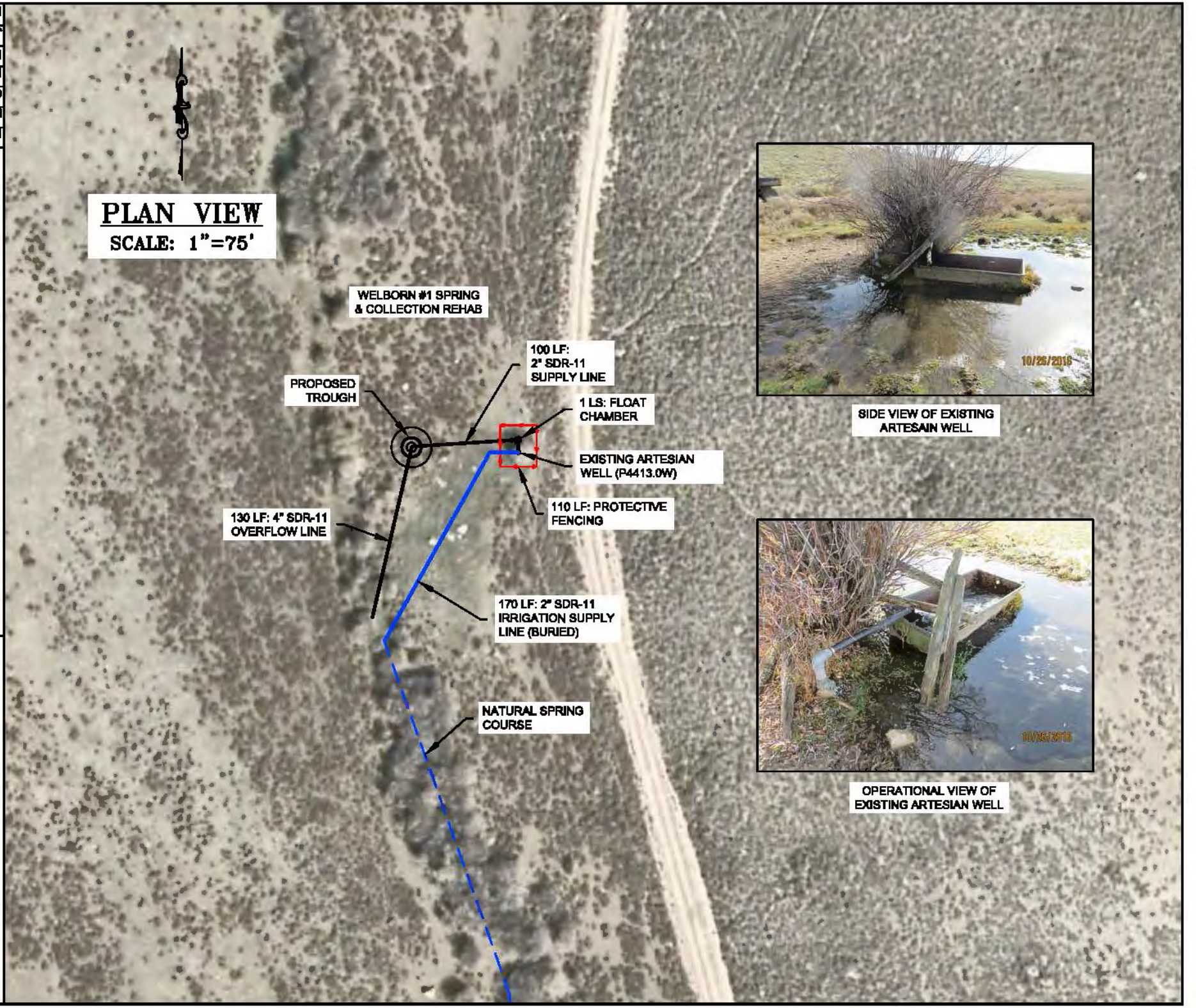

WWDC–NEW FORK RIVER WATERSHED
MASTER PLAN–LEVEL I STUDY

WILLOW CREEK RANCH (WELBORN #1 WELL)
LOCATED IN SECTION 36, T.36N., R.110W.,
SUBLETTE COUNTY, WY

RIO VERDE ENGINEERING
PINEDALE, WYOMING
(307) 367-2826
FAX: (307)-367-2846

DESIGNED BY: MTJ	
DRAWN BY: MTJ	
CHECKED BY: MCE	
DATE: 5/22/17	
REV:	
JOB NO: 4183	
PAGE: 1 OF 2	

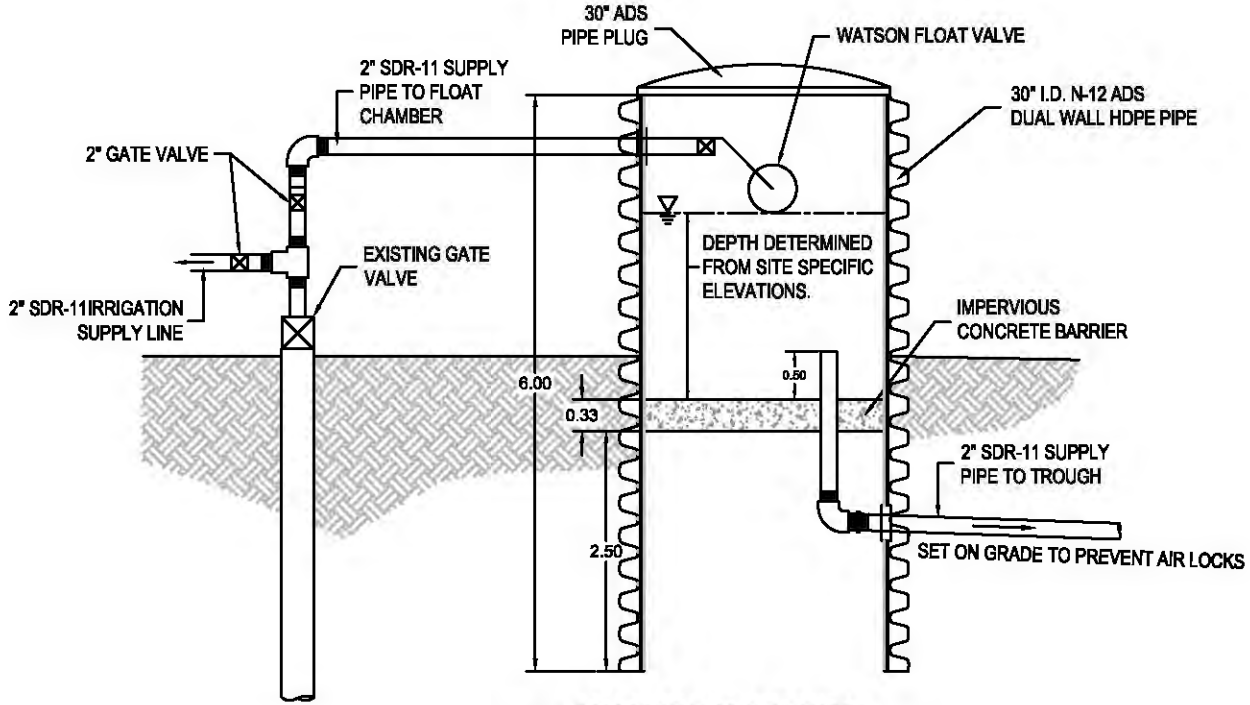

FLOAT CHAMBER X-SECTION

N.T.S.

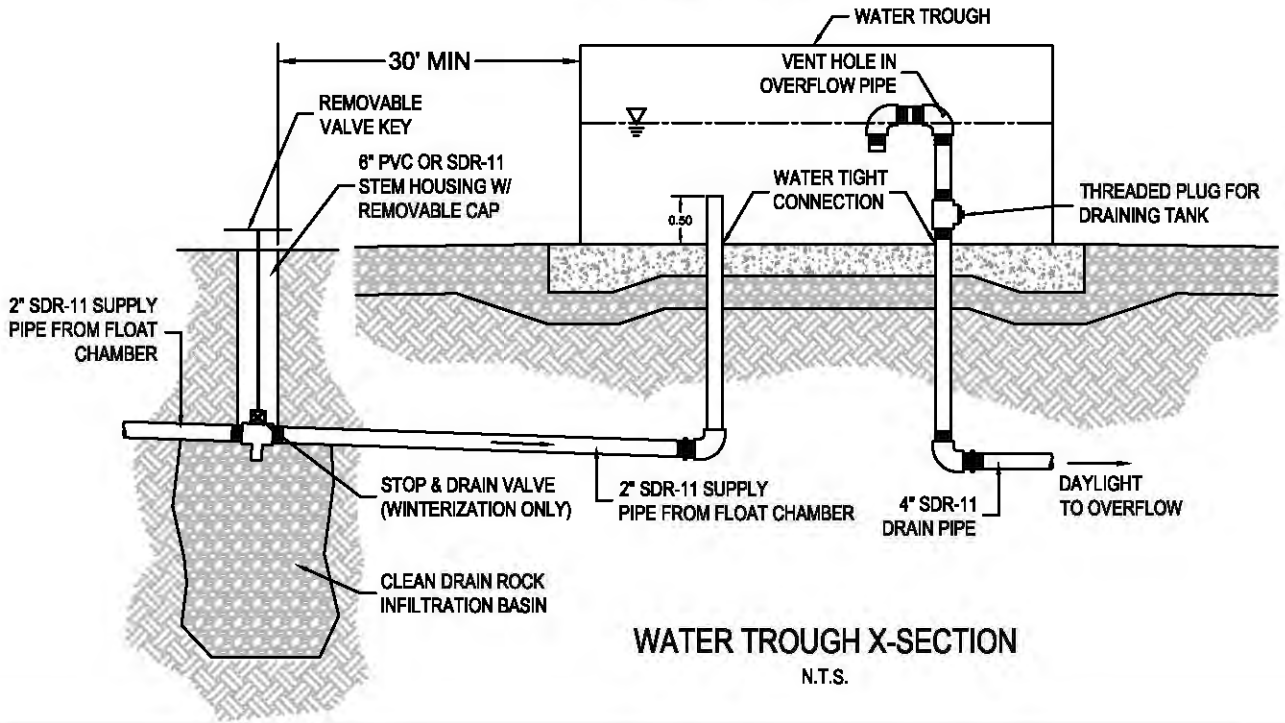

WATER TROUGH X-SECTION

N.T.S.

STANDARD DETAIL

ARTESIAN WELL & COLLECTION

SYSTEM REHABILITATION

RIO VERDE ENGINEERING
PINEDALE, WYOMING
(307) 367-2828
FAX# (307)-367-2546

DESIGNED BY: MTJ
DRAWN BY: MTJ
CHECKED BY: MCE
DATE: 5/22/17
REV:
JOB NO: 4183
PAGE: 2 OF 2

NEW FORK RIVER WATERSHED STUDY LEVEL I

Owner/Operator: Willow Creek Ranch
Project Type: Source Water Development
Project ID: 26
Project Name: Dumphy Hollow Spring Stock Water Development Project
Location (PLSS): Secs. 11 & 14, T.35N., R.110W.
Location (Lat/Long): 43.011960°, 109.950650°

PROJECT COMPONENTS - ITEMIZED COSTS

ITEM No.	DESCRIPTION	QUANTITY	UNIT	UNIT COST	TOTAL COST
1	Mobilization	1	LS	$ 1,600.00	$ 1,600.00
2	Bonds	1	LS	$ 300.00	$ 300.00
3	Spring Box (Complete Installed)	1	LS	$ 2,600.00	$ 2,600.00
4	Spring Collector (Complete Installed)	1	LS	$ 1,100.00	$ 1,100.00
5	2" SDR-11 Supply Line	200	LF	$ 3.75	$ 750.00
6	4" SDR-11 Drain Line	75	LF	$ 6.95	$ 521.25
7	4-Rail Pole Fence	180	LF	$ 8.50	$ 1,530.00
8	2,000 gal Tire Trough (Complete)	1	LS	$ 10,000.00	$ 10,000.00
				TOTAL COMPONENT COST (SUBTOTAL #2):	$ 18,401.25

PREPARATION OF FINAL DESIGNS & SPECIFICATIONS:	$ 1,200.00
PERMITTING AND MITIGATION:	$ 650.00
LEGAL FEES:	$ -
ACQUISTION OF ACCESS AND RIGHTS-OF-WAY:	$ -
PRE-CONSTRUCTION COSTS (**SUBTOTAL #1**):	$ 1,850.00
TOTAL COMPONENT COST (**SUBTOTAL #2**):	$ 18,401.25
CONSTRUCTION ENGINEERING COST (SUBTOTAL #2 x 10%):	$ 1,840.13
COMPONENTS AND ENGINEERING COSTS (**SUBTOTAL #3**):	$ 20,241.38
CONTINGENCY (SUBTOTAL #3 X 15%):	$ 3,036.21
TOTAL CONSTRUCTION COST (**SUBTOTAL #4**):	$ 23,277.58
TOTAL PROJECT COST (**SUBTOTAL #1 + SUBTOTAL #4**):	**$ 25,127.58**

PLAN VIEW

SCALE: 1"=50'

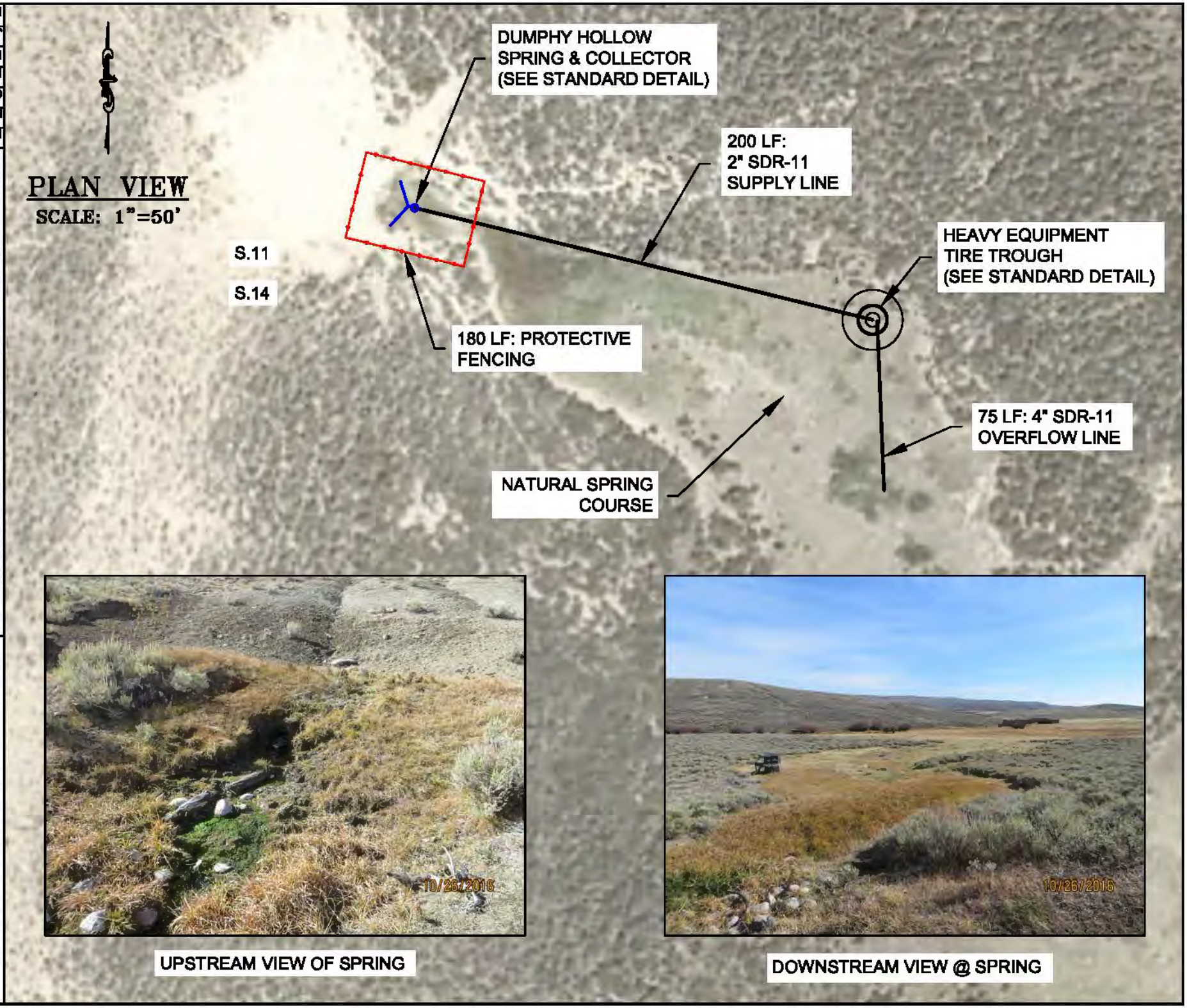

UPSTREAM VIEW OF SPRING

DOWNSTREAM VIEW @ SPRING

WWDC–NEW FORK RIVER WATERSHED
MASTER PLAN–LEVEL I STUDY
WILLOW CREEK RANCH (DUMPHY HOLLOW SPRING)
LOCATED IN SECS. 11 & 14, T.35N., R.110W.,
SUBLETTE COUNTY, WY

DESIGNED BY: MJ
DRAWN BY: MJ
CHECKED BY: MCE
DATE: 5/22/17
REV:
JOB NO: 4185
PAGE: 1 OF 1

RIO VERDE ENGINEERING
(307) 367-2828
FAX: (307)-367-2546
PINEDALE, WYOMING

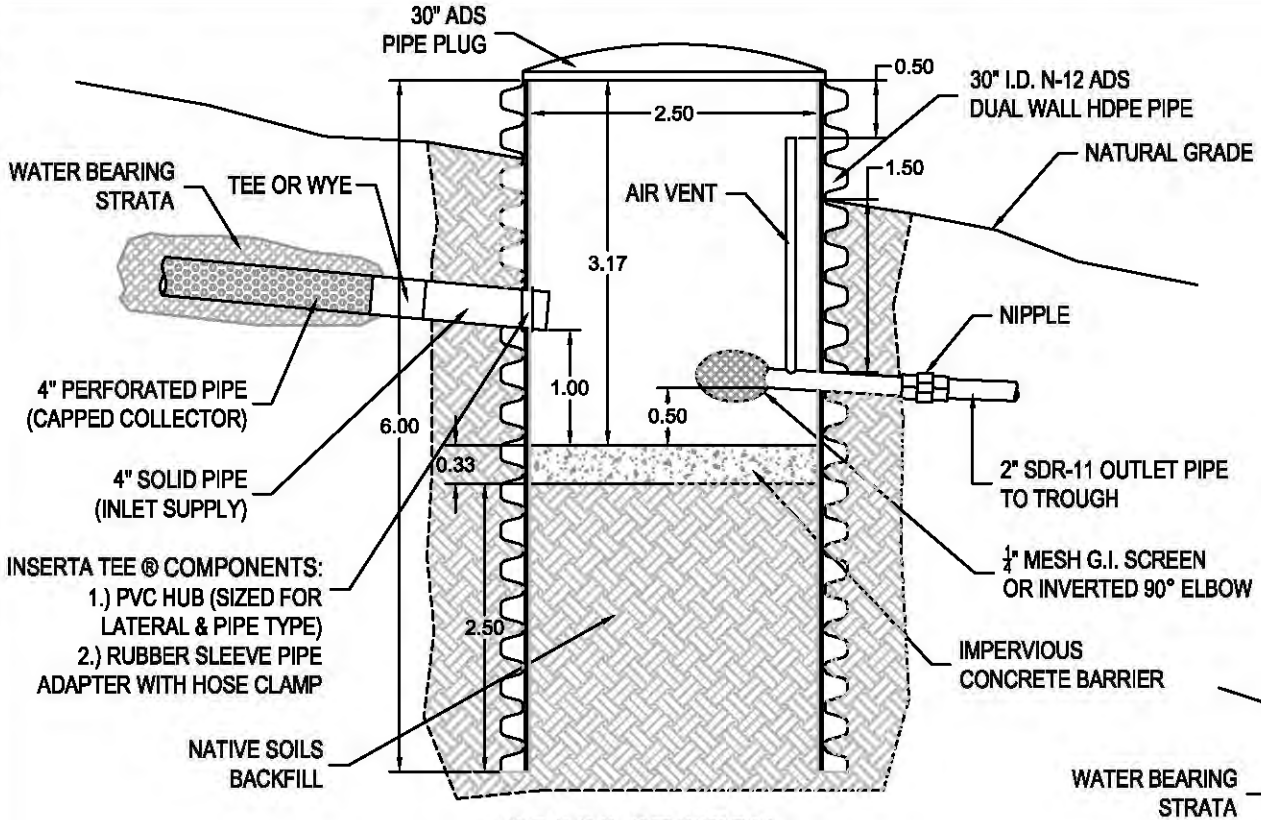

CROSS SECTION A-A'

N.T.S.

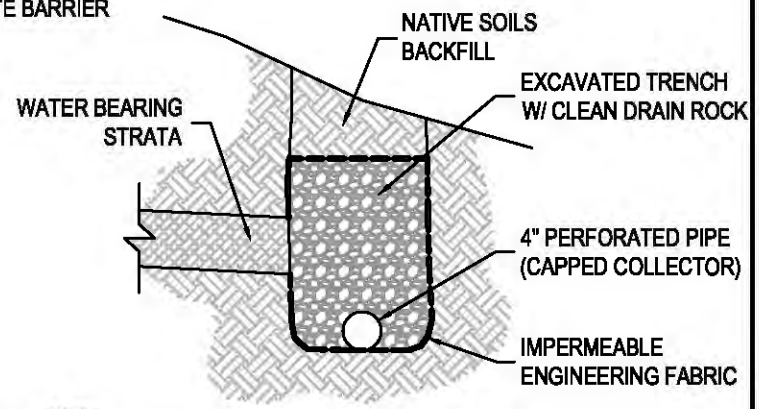

CROSS SECTION B-B'

N.T.S.

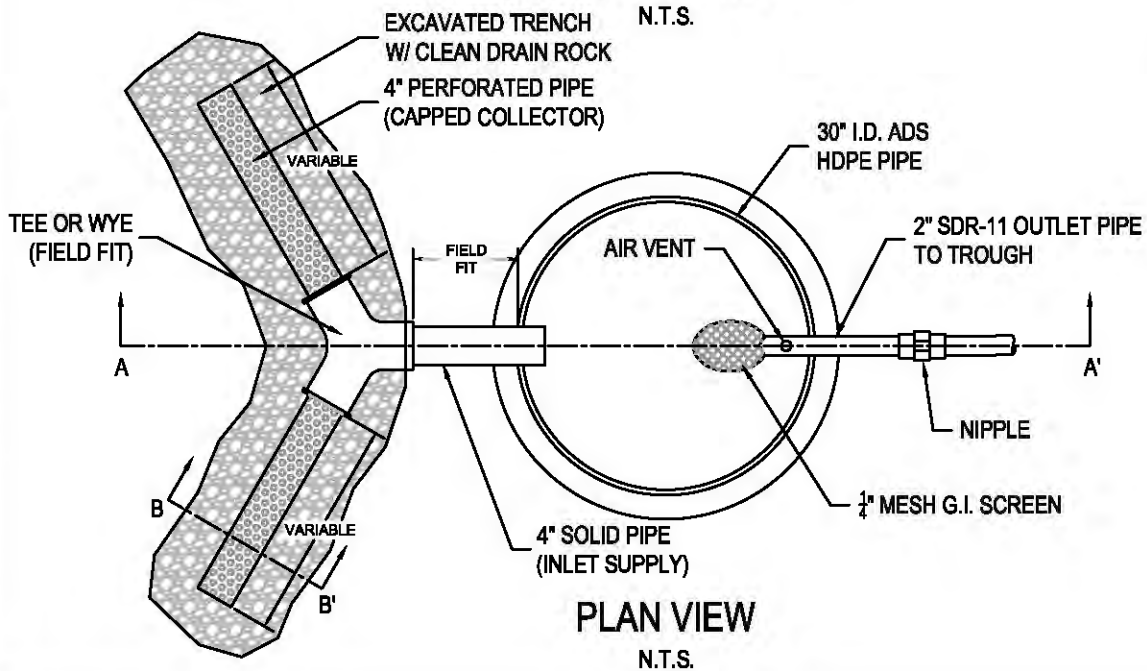

PLAN VIEW

N.T.S.

STANDARD DRAWING

SIDE HILL SPRING BOX COLLECTION SYSTEM

RIO VERDE ENGINEERING
(307) 367-2826
FAX# (307)-367-2546
PINEDALE, WYOMING

DESIGNED BY: MTJ	
DRAWN BY: MTJ	
CHECKED BY: MCE	
DATE: 4/21/17	
REV:	
JOB NO: 4183	
PAGE: 1 OF 1	

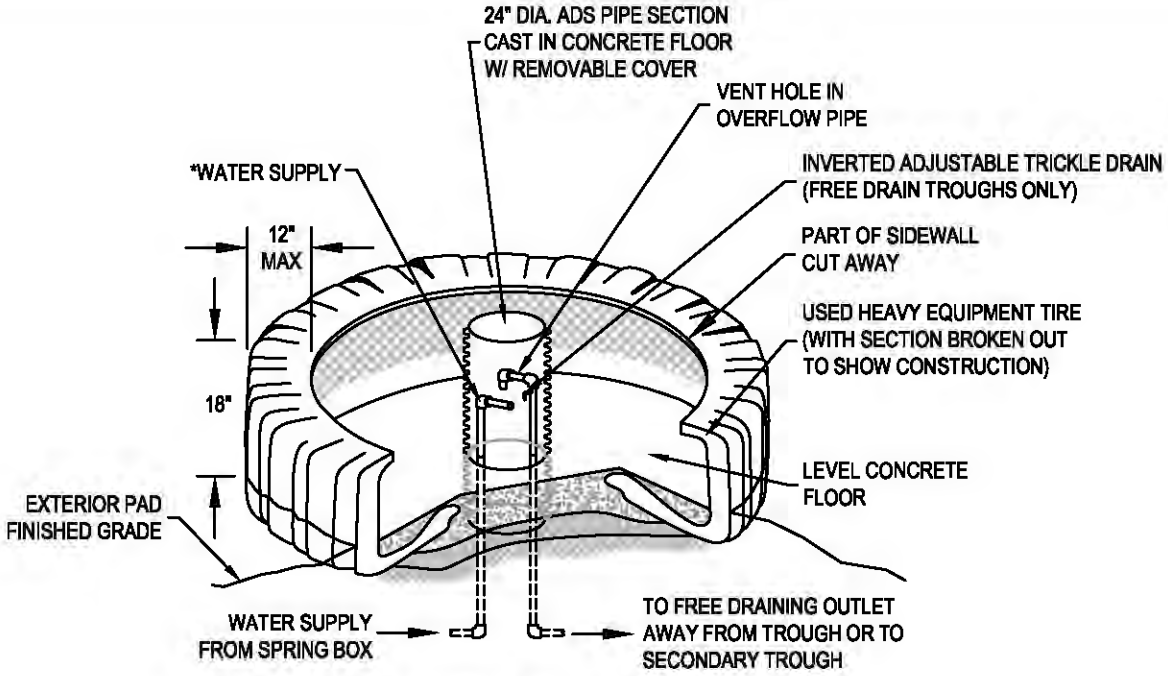

WATERING TROUGH
ISOMETRIC VIEW
N.T.S.

INFLOW PIPE DIA. - 2"

OVERFLOW PIPE DIA. - 4 IN.

CONCRETE SLAB THICKNESS - 6 IN.

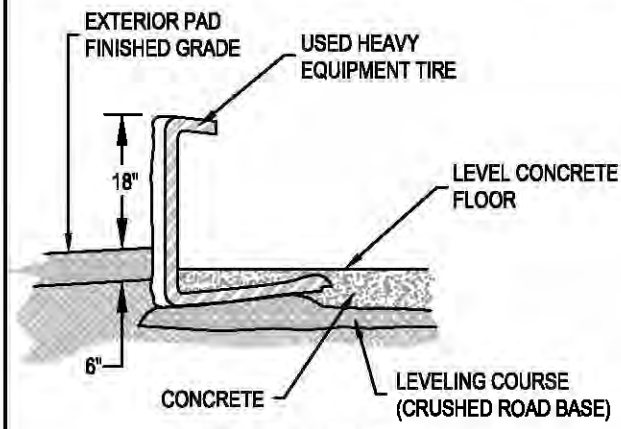

SECTION VIEW
N.T.S.

*TO REDUCE FREEZING, POINT THE INFLOW IN THE DIRECTION THAT WILL CAUSE THE MOST WATER MOVEMENT.

INSTALLATION NOTES

1.) CUT AWAY PART OF SIDEWALL. THIS WILL BE THE TOP OF THE TROUGH

2.) USE THE CRUSHED ROAD BASE TO FILL AROUND THE PIPES AND TO LEVEL THE TIRE.

3.) POUR CONCRETE AROUND ADS PIPE, WATER SUPPLY, OVERFLOW PIPES AND WORK UNDER INTERIOR EDGE OF TIRE. FINISH THE TOP SURFACE OF CONCRETE TO FORM A LEVEL PAD ACROSS THE TROUGH BOTTOM.

4.) PROVIDE AN ESCAPE DEVICE FOR SMALL BIRDS AND ANIMALS THAT MAY BECOME ENTRAPPED. A RAMP CONSTRUCTED OF A PIECE OF EXPANDED METAL EXTENDING FROM THE WATER SURFACE TO THE TOP SIDEWALL OR A FLOAT CONSISTING OF A PIECE OF LUMBER ARE TWO DEVICES THAT COULD BE USED.

5.) EXTEND CRUSHED ROAD BASE PAD 6 FT. OUT FROM EXTERIOR TIRE EDGE

*DESIGN BASED ON NRCS STANDARDIZED DRAWING AND DESIGN INPUT FROM BROGAN HYDROLOGIC CONSULTING. DESIGN MUST BE ADAPTED TO MEET SITE SPECIFIC CONDITIONS.

PAGE: 1 OF 1	
JOB NO: 4183	
REV:	
DATE: 4/21/17	
CHECKED BY: MCE	
DRAWN BY: MTJ	
DESIGNED BY:	

STANDARD DETAIL
HEAVY EQUIPMENT TIRE TROUGH

U.S.D.A. NATURAL RESOURCES CONSERVATION SERVICE

RIO VERDE ENGINEERING
(307) 367-2826
FAX (307)-367-2846 PINEDALE, WYOMING

NEW FORK RIVER WATERSHED STUDY LEVEL I

Owner/Operator: Willow Creek Ranch
Project Type: Source Water Development
Project ID: 27
Project Name: Noble Place Spring Stock Water Development Project
Location (PLSS): Sec. 11, T.35N., R.110W.
Location (Lat/Long): 43.01787°, 109.95035°

PROJECT COMPONENTS - ITEMIZED COSTS

ITEM No.	DESCRIPTION	QUANTITY	UNIT	UNIT COST	TOTAL COST
1	Mobilization	1	LS	$ 1,600.00	$ 1,600.00
2	Bonds	1	LS	$ 300.00	$ 300.00
3	Spring Box (Complete Installed)	1	LS	$ 2,600.00	$ 2,600.00
4	Spring Collector (Complete Installed)	1	LS	$ 1,100.00	$ 1,100.00
5	2" SDR-11 Supply Line	260	LF	$ 3.75	$ 975.00
6	4" SDR-11 Drain Line	106	LF	$ 6.95	$ 736.70
7	4-Rail Pole Fence	200	LF	$ 8.50	$ 1,700.00
8	2,000 gal Tire Trough (Complete)	1	LS	$ 10,000.00	$ 10,000.00
				TOTAL COMPONENT COST (SUBTOTAL #2):	$ 19,011.70

PREPARATION OF FINAL DESIGNS & SPECIFICATIONS:	$ 1,200.00
PERMITTING AND MITIGATION:	$ 650.00
LEGAL FEES:	$ -
ACQUISTION OF ACCESS AND RIGHTS-OF-WAY:	$ -
PRE-CONSTRUCTION COSTS (**SUBTOTAL #1**):	$ 1,850.00
TOTAL COMPONENT COST (**SUBTOTAL #2**):	$ 19,011.70
CONSTRUCTION ENGINEERING COST (SUBTOTAL #2 x 10%):	$ 1,901.17
COMPONENTS AND ENGINEERING COSTS (**SUBTOTAL #3**):	$ 20,912.87
CONTINGENCY (SUBTOTAL #3 X 15%):	$ 3,136.93
TOTAL CONSTRUCTION COST (**SUBTOTAL #4**):	$ 24,049.80
TOTAL PROJECT COST (**SUBTOTAL #1 + SUBTOTAL #4**):	**$ 25,899.80**

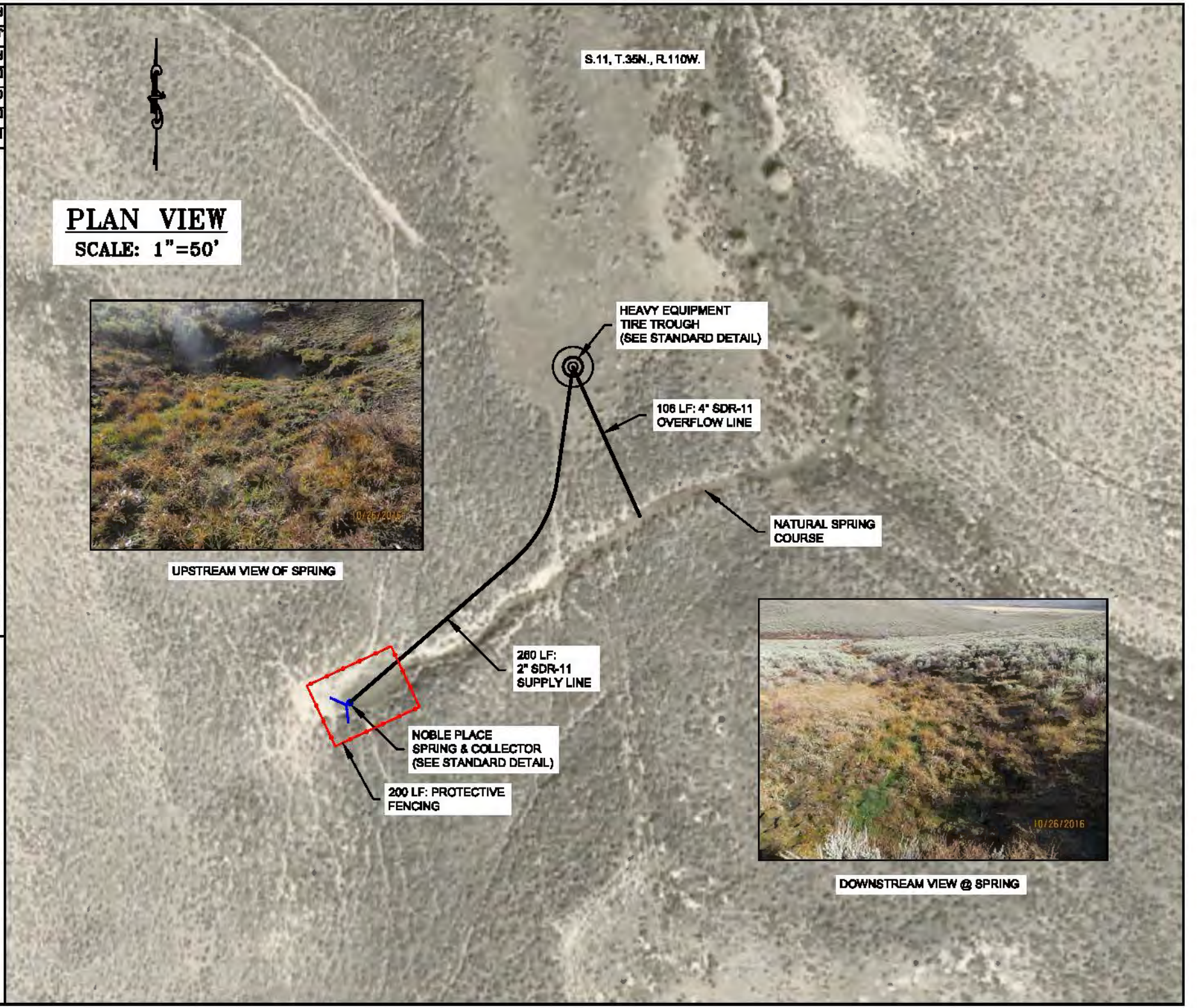

WWDC–NEW FORK RIVER WATERSHED

MASTER PLAN–LEVEL I STUDY

WILLOW CREEK RANCH (NOBLE PLACE SPRING)
LOCATED IN SECTION 11, T.35N., R.110W.,
SUBLETTE COUNTY, WY

DESIGNED BY: MTJ
DRAWN BY: MTJ
CHECKED BY: MCE
DATE: 5/2/17
REV:
JOB NO: 4183
PAGE: 1 OF 1

RIO VERDE ENGINEERING
(307) 367-2828
FAX: (307)-367-2846
PINEDALE, WYOMING

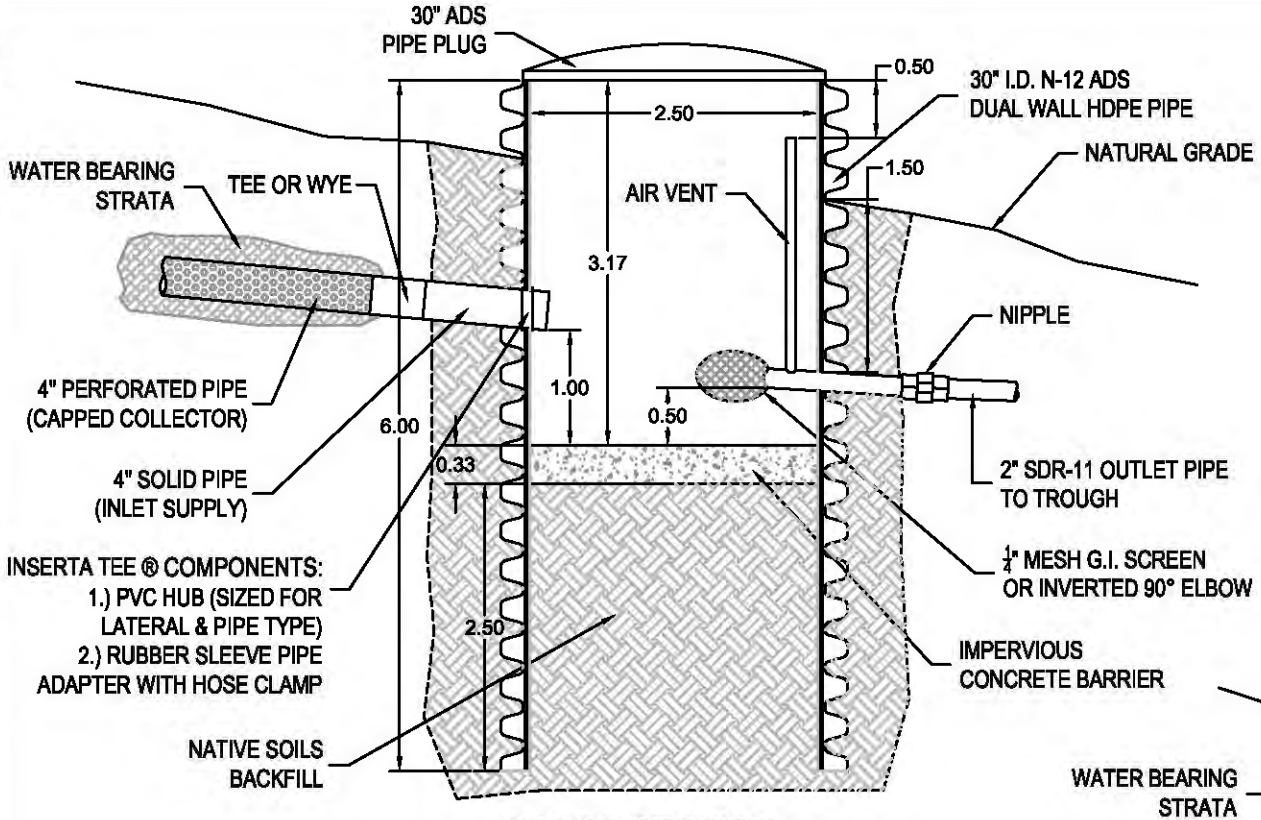

CROSS SECTION A-A'

N.T.S.

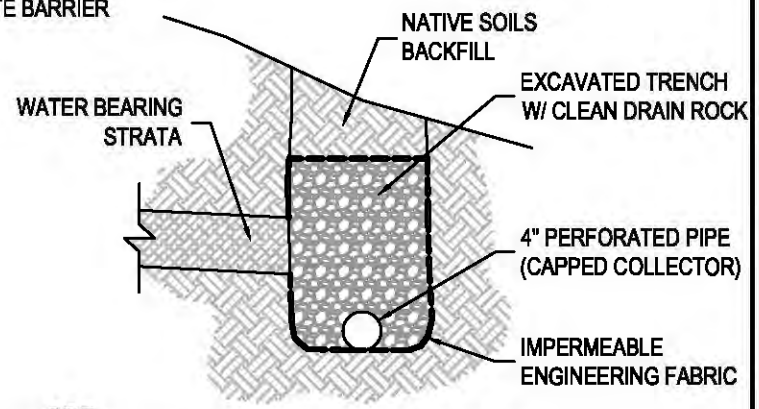

CROSS SECTION B-B'

N.T.S.

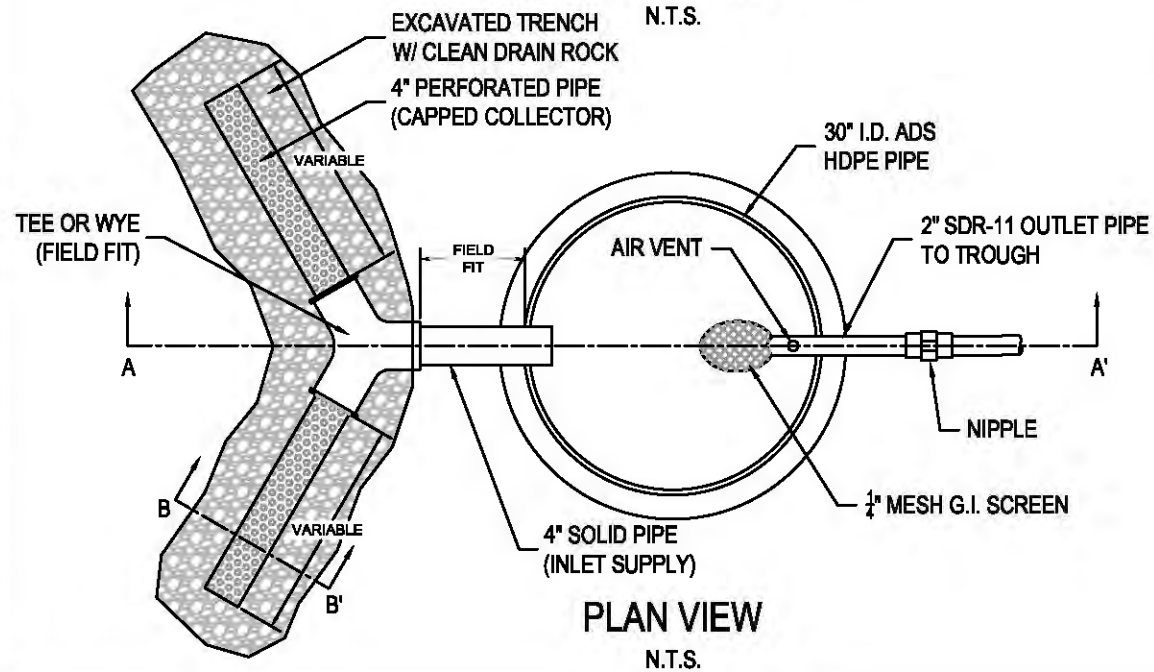

PLAN VIEW

N.T.S.

STANDARD DRAWING

SIDE HILL SPRING BOX COLLECTION SYSTEM

RIO VERDE ENGINEERING
PINEDALE, WYOMING
(307) 367-2826
FAX# (307)-367-2546

DESIGNED BY: MTJ	
DRAWN BY: MTJ	
CHECKED BY: MCE	
DATE: 4/21/17	
REV:	
JOB NO: 4183	
PAGE: 1 OF 1	

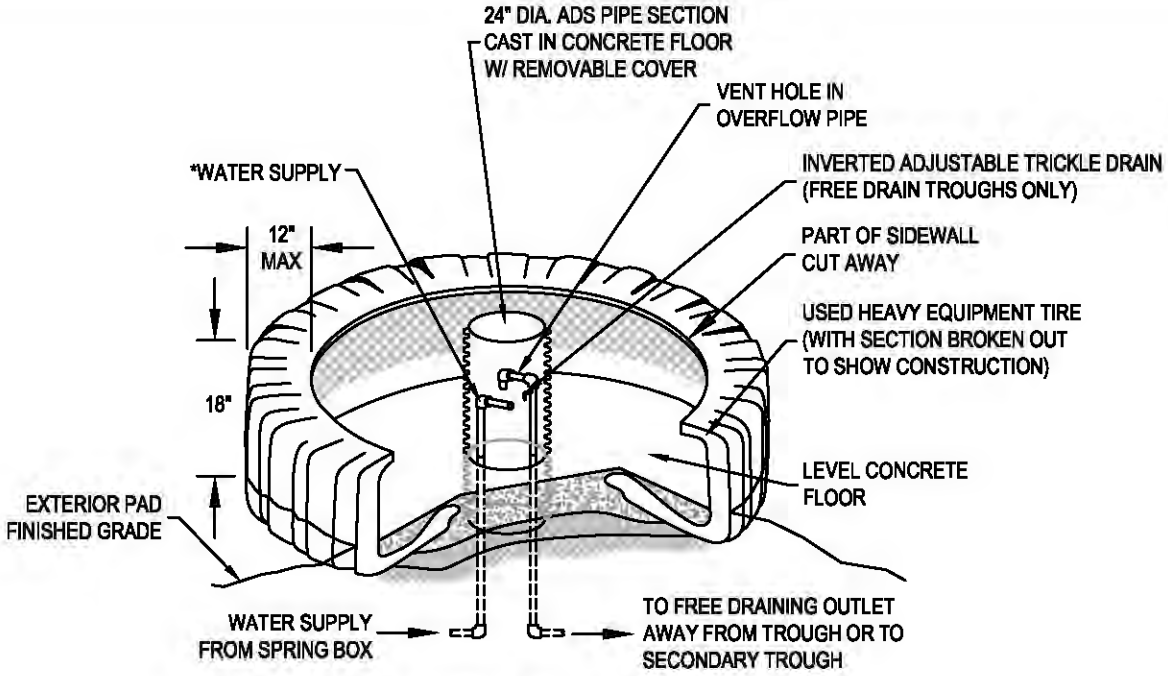

WATERING TROUGH
ISOMETRIC VIEW
N.T.S.

INFLOW PIPE DIA. - 2"

OVERFLOW PIPE DIA. - 4 IN.

CONCRETE SLAB THICKNESS - 6 IN.

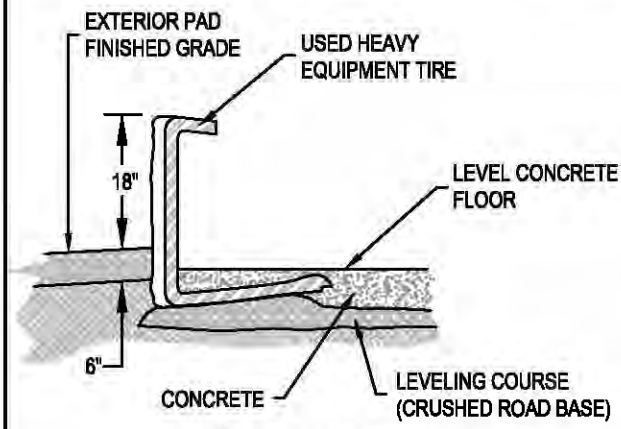

SECTION VIEW
N.T.S.

*TO REDUCE FREEZING, POINT THE INFLOW IN THE DIRECTION THAT WILL CAUSE THE MOST WATER MOVEMENT.

INSTALLATION NOTES

1.) CUT AWAY PART OF SIDEWALL. THIS WILL BE THE TOP OF THE TROUGH

2.) USE THE CRUSHED ROAD BASE TO FILL AROUND THE PIPES AND TO LEVEL THE TIRE.

3.) POUR CONCRETE AROUND ADS PIPE, WATER SUPPLY, OVERFLOW PIPES AND WORK UNDER INTERIOR EDGE OF TIRE. FINISH THE TOP SURFACE OF CONCRETE TO FORM A LEVEL PAD ACROSS THE TROUGH BOTTOM.

4.) PROVIDE AN ESCAPE DEVICE FOR SMALL BIRDS AND ANIMALS THAT MAY BECOME ENTRAPPED. A RAMP CONSTRUCTED OF A PIECE OF EXPANDED METAL EXTENDING FROM THE WATER SURFACE TO THE TOP SIDEWALL OR A FLOAT CONSISTING OF A PIECE OF LUMBER ARE TWO DEVICES THAT COULD BE USED.

5.) EXTEND CRUSHED ROAD BASE PAD 6 FT. OUT FROM EXTERIOR TIRE EDGE

*DESIGN BASED ON NRCS STANDARDIZED DRAWING AND DESIGN INPUT FROM BROGAN HYDROLOGIC CONSULTING. DESIGN MUST BE ADAPTED TO MEET SITE SPECIFIC CONDITIONS.

PAGE: 1 OF 1	
JOB NO: 4183	
REV:	
DATE: 4/21/17	
CHECKED BY: MCE	
DRAWN BY: MTJ	
DESIGNED BY:	

STANDARD DETAIL
HEAVY EQUIPMENT TIRE TROUGH

U.S.D.A. NATURAL RESOURCES CONSERVATION SERVICE

RIO VERDE ENGINEERING
(307) 367-2826
FAX (307)-367-2846 PINEDALE, WYOMING

NEW FORK RIVER WATERSHED STUDY LEVEL I

Owner/Operator: Willow Creek Ranch
Project Type: Source Water Development
Project ID: 28
Project Name: Southeast Smith Place Spring Stock Water Development Project
Location (PLSS): Sec. 6, T.35N., R.109W.
Location (Lat/Long): 43.02741°, 109.90198°

PROJECT COMPONENTS - ITEMIZED COSTS

ITEM No.	DESCRIPTION	QUANTITY	UNIT	UNIT COST	TOTAL COST
1	Mobilization	1	LS	$ 1,600.00	$ 1,600.00
2	Bonds	1	LS	$ 300.00	$ 300.00
3	Spring Box (Complete Installed)	1	LS	$ 2,600.00	$ 2,600.00
4	Spring Collector (Complete Installed)	1	LS	$ 1,100.00	$ 1,100.00
5	2" SDR-11 Supply Line	320	LF	$ 3.75	$ 1,200.00
6	4" SDR-11 Drain Line	115	LF	$ 6.95	$ 799.25
7	4-Rail Pole Fence	180	LF	$ 8.50	$ 1,530.00
8	2,000 gal Tire Trough (Complete)	1	LS	$ 10,000.00	$ 10,000.00
				TOTAL COMPONENT COST (SUBTOTAL #2):	$ 19,129.25

PREPARATION OF FINAL DESIGNS & SPECIFICATIONS:	$ 1,200.00
PERMITTING AND MITIGATION:	$ 650.00
LEGAL FEES:	$ -
ACQUISTION OF ACCESS AND RIGHTS-OF-WAY:	$ -
PRE-CONSTRUCTION COSTS (**SUBTOTAL #1**):	$ 1,850.00
TOTAL COMPONENT COST **(SUBTOTAL #2**):	$ 19,129.25
CONSTRUCTION ENGINEERING COST (SUBTOTAL #2 x 10%):	$ 1,912.93
COMPONENTS AND ENGINEERING COSTS (**SUBTOTAL #3**):	$ 21,042.18
CONTINGENCY (SUBTOTAL #3 X 15%):	$ 3,156.33
TOTAL CONSTRUCTION COST (**SUBTOTAL #4**):	$ 24,198.50
TOTAL PROJECT COST (**SUBTOTAL #1 + SUBTOTAL #4**):	**$ 26,048.50**

DESIGNED BY: MTJ
DRAWN BY: MTJ
CHECKED BY: MCE
DATE: 5/22/17
REV:
JOB NO: 4183
PAGE: 1 OF 1

WWDC–NEW FORK RIVER WATERSHED MASTER PLAN–LEVEL I STUDY

WILLOW CREEK RANCH (S.E. SMITH PLACE SPRING)
LOCATED IN SECTION 6, T.35N., R.109W.,
SUBLETTE COUNTY, WY

RIO VERDE ENGINEERING
(307) 367-2826
FAX# (307)-367-2548
PINEDALE, WYOMING

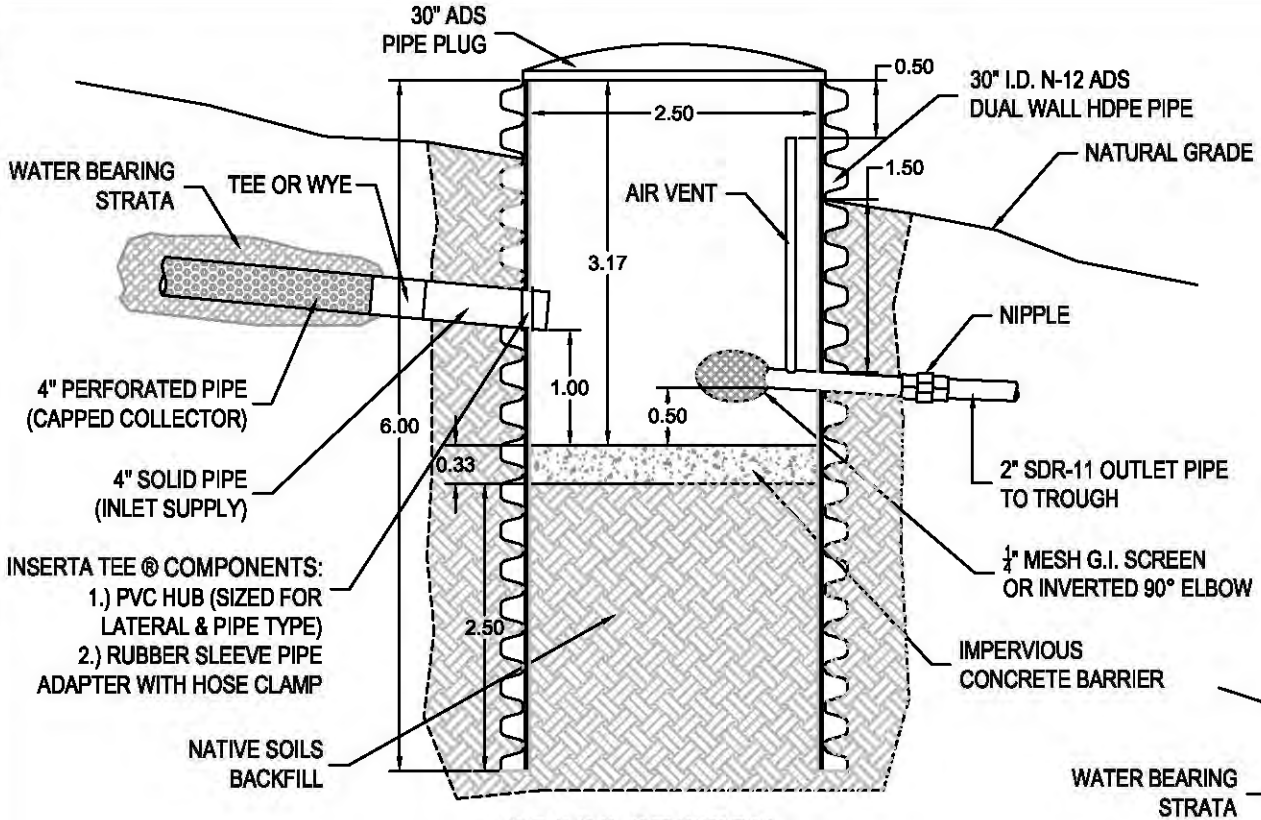

CROSS SECTION A-A'

N.T.S.

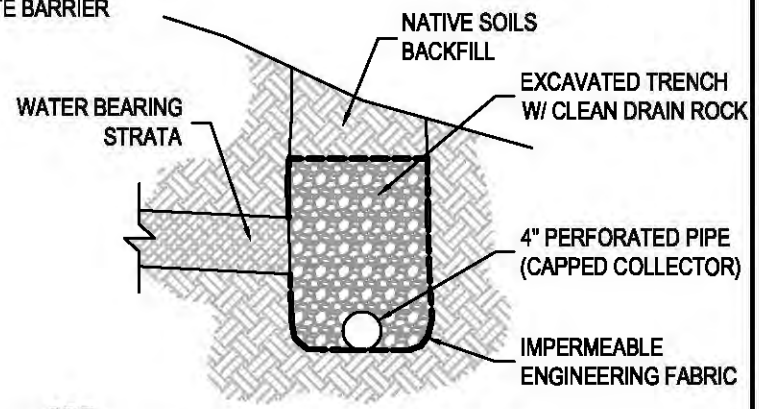

CROSS SECTION B-B'

N.T.S.

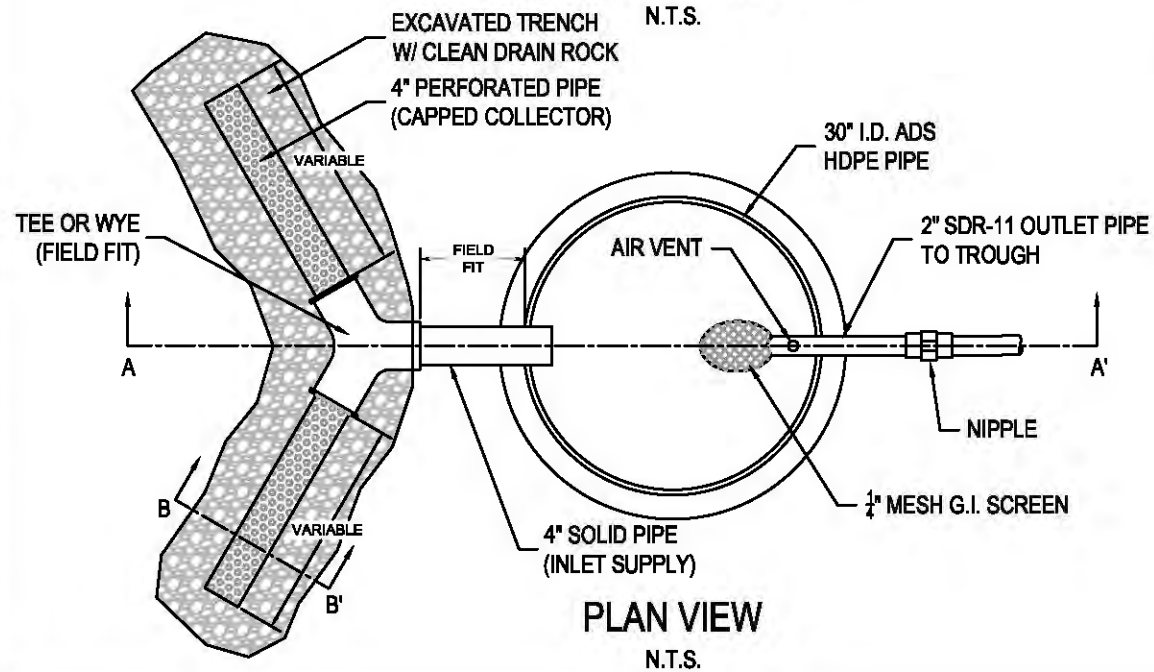

PLAN VIEW

N.T.S.

STANDARD DRAWING

SIDE HILL SPRING BOX COLLECTION SYSTEM

RIO VERDE ENGINEERING
PINEDALE, WYOMING
(307) 367-2826
FAX# (307)-367-2546

DESIGNED BY: MTJ	
DRAWN BY: MTJ	
CHECKED BY: MCE	
DATE: 4/21/17	
REV:	
JOB NO: 4183	
PAGE: 1 OF 1	

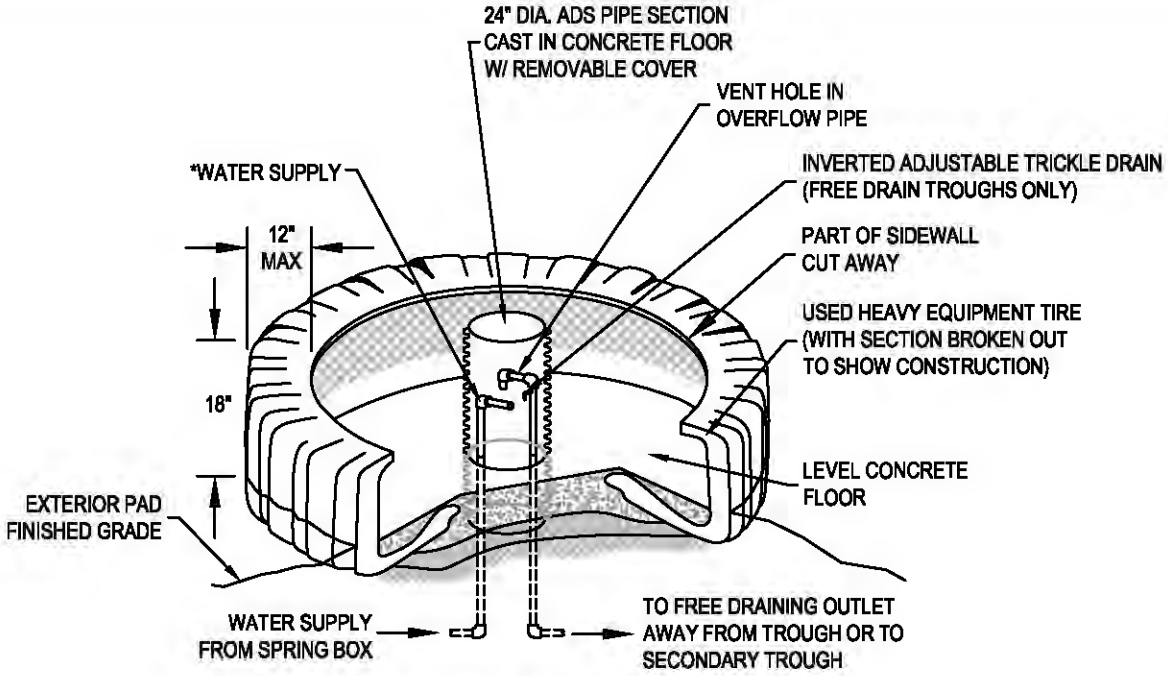

WATERING TROUGH
ISOMETRIC VIEW
N.T.S.

INFLOW PIPE DIA. - 2"

OVERFLOW PIPE DIA. - 4 IN.

CONCRETE SLAB THICKNESS - 6 IN.

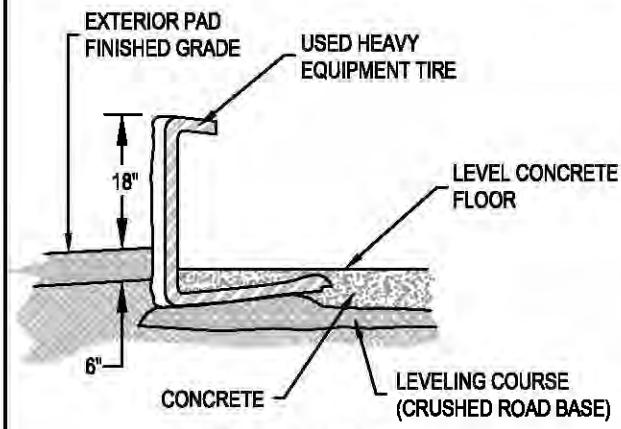

SECTION VIEW
N.T.S.

*TO REDUCE FREEZING, POINT THE INFLOW IN THE DIRECTION THAT WILL CAUSE THE MOST WATER MOVEMENT.

INSTALLATION NOTES

1.) CUT AWAY PART OF SIDEWALL. THIS WILL BE THE TOP OF THE TROUGH

2.) USE THE CRUSHED ROAD BASE TO FILL AROUND THE PIPES AND TO LEVEL THE TIRE.

3.) POUR CONCRETE AROUND ADS PIPE, WATER SUPPLY, OVERFLOW PIPES AND WORK UNDER INTERIOR EDGE OF TIRE. FINISH THE TOP SURFACE OF CONCRETE TO FORM A LEVEL PAD ACROSS THE TROUGH BOTTOM.

4.) PROVIDE AN ESCAPE DEVICE FOR SMALL BIRDS AND ANIMALS THAT MAY BECOME ENTRAPPED. A RAMP CONSTRUCTED OF A PIECE OF EXPANDED METAL EXTENDING FROM THE WATER SURFACE TO THE TOP SIDEWALL OR A FLOAT CONSISTING OF A PIECE OF LUMBER ARE TWO DEVICES THAT COULD BE USED.

5.) EXTEND CRUSHED ROAD BASE PAD 6 FT. OUT FROM EXTERIOR TIRE EDGE

*DESIGN BASED ON NRCS STANDARDIZED DRAWING AND DESIGN INPUT FROM BROGAN HYDROLOGIC CONSULTING. DESIGN MUST BE ADAPTED TO MEET SITE SPECIFIC CONDITIONS.

PAGE: 1 OF 1	
JOB NO: 4183	
REV:	
DATE: 4/21/17	
CHECKED BY: MCE	
DRAWN BY: MTJ	
DESIGNED BY:	

STANDARD DETAIL
HEAVY EQUIPMENT TIRE TROUGH

U.S.D.A. NATURAL RESOURCES CONSERVATION SERVICE

RIO VERDE ENGINEERING
(307) 367-2826
FAX (307)-367-2846 PINEDALE, WYOMING

NEW FORK RIVER WATERSHED STUDY LEVEL I

Owner/Operator: Willow Creek Ranch
Project Type: Irrigation
Project ID: 29
Project Name: EC Walker Ditch Diversion Rehabilitation Project
Location (PLSS): Sec. 13, T.35N., R.110W.
Location (Lat/Long): 43.00539°, 109.93278°

PROJECT COMPONENTS - ITEMIZED COSTS

ITEM No.	DESCRIPTION	QUANTITY	UNIT	UNIT COST	TOTAL COST
1	Mobilization	1	LS	$ 1,600.00	$ 1,600.00
2	Bonds	1	LS	$ 500.00	$ 500.00
3	Remove & Haul Off Old Headgate	1	LS	$ 2,100.00	$ 2,100.00
4	Misc. Excavation	40	CY	$ 26.00	$ 1,040.00
5	Headgate (Steel)	1	LS	$ 8,600.00	$ 8,600.00
6	Install 36" Screw Gate	1	EA	$ 850.00	$ 850.00
7	Steel Grate Walk Way (2.5' x 9')	1	LS	$ 420.00	$ 420.00
8	36" ADS Pipe	40	LF	$ 85.00	$ 3,400.00
9	Rock Rip-Rap	25	CY	$ 42.00	$ 1,050.00
				TOTAL COMPONENT COST (SUBTOTAL #2):	$ 19,560.00

PREPARATION OF FINAL DESIGNS & SPECIFICATIONS:	$ 1,200.00
PERMITTING AND MITIGATION:	$ 300.00
LEGAL FEES:	$ -
ACQUISTION OF ACCESS AND RIGHTS-OF-WAY:	$ -
PRE-CONSTRUCTION COSTS (**SUBTOTAL #1**):	$ 1,500.00
TOTAL COMPONENT COST **(SUBTOTAL #2**):	$ 19,560.00
CONSTRUCTION ENGINEERING COST (SUBTOTAL #2 x 10%):	$ 1,956.00
COMPONENTS AND ENGINEERING COSTS (**SUBTOTAL #3**):	$ 21,516.00
CONTINGENCY (SUBTOTAL #3 X 15%):	$ 3,227.40
TOTAL CONSTRUCTION COST (**SUBTOTAL #4**):	$ 24,743.40
TOTAL PROJECT COST (**SUBTOTAL #1 + SUBTOTAL #4**):	**$ 26,243.40**

EXISTING DIVERSION UPSTREAM (1)

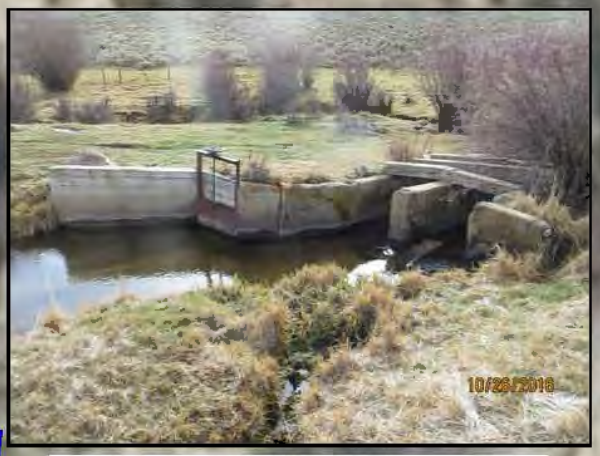

EXISTING DIVERSION UPSTREAM (2)

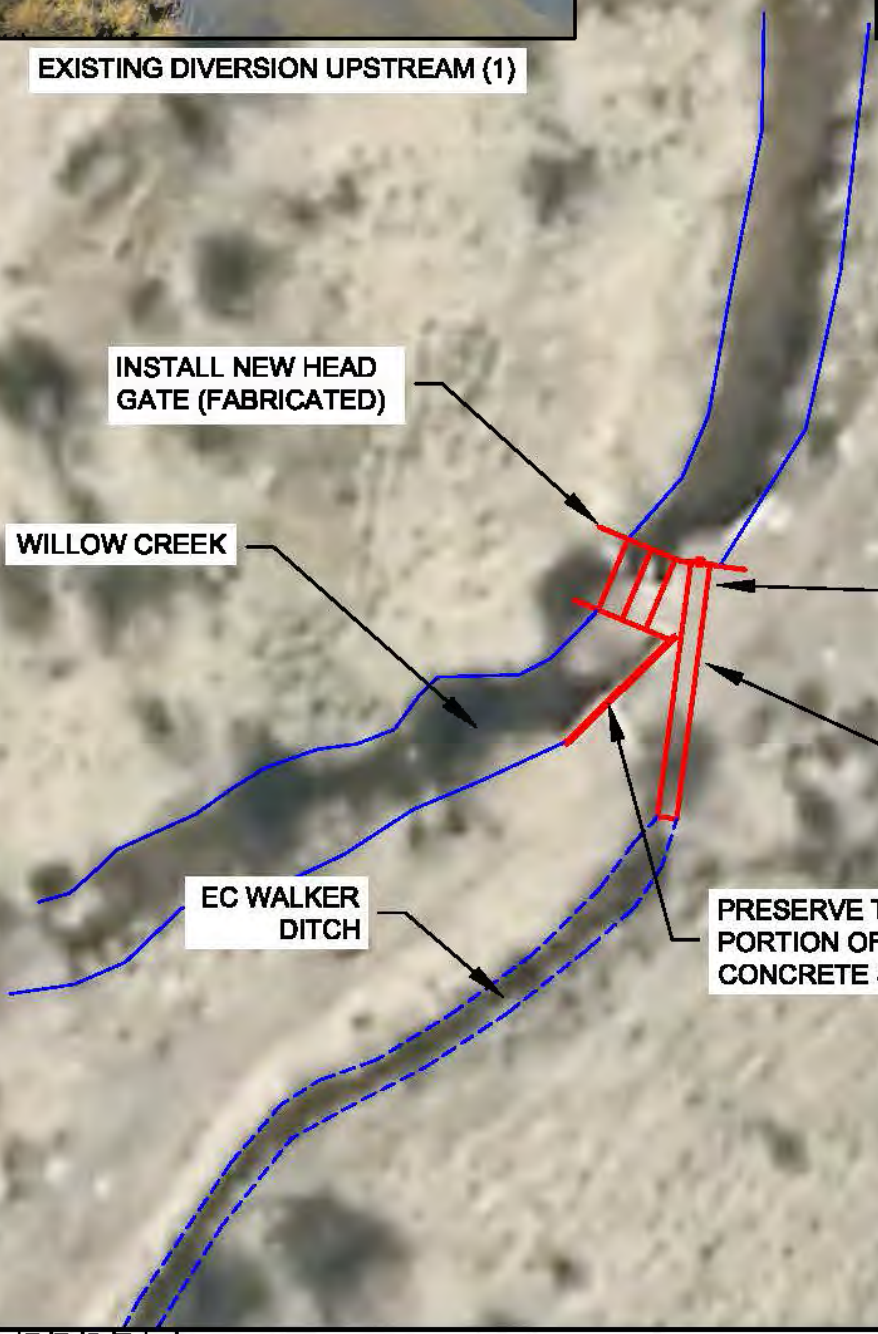

PLAN VIEW

SCALE: 1"=30'

DESIGNED BY: MTJ	WWDC–NEW FORK RIVER WATERSHED MASTER PLAN–LEVEL I STUDY
DRAWN BY: MTJ	WILLOW CREEK RANCH (EC WALKER DIVERSION REHAB)
CHECKED BY: MCE	LOCATED IN SECTION 13, T.35N., R.110W.,
DATE: 5/22/17	SUBLETTE COUNTY, WY
REV:	
JOB NO: 4183	
PAGE: 1 OF 2	

RIO VERDE ENGINEERING
(307) 367-2826
FAX# (307)-367-2546
PINEDALE, WYOMING

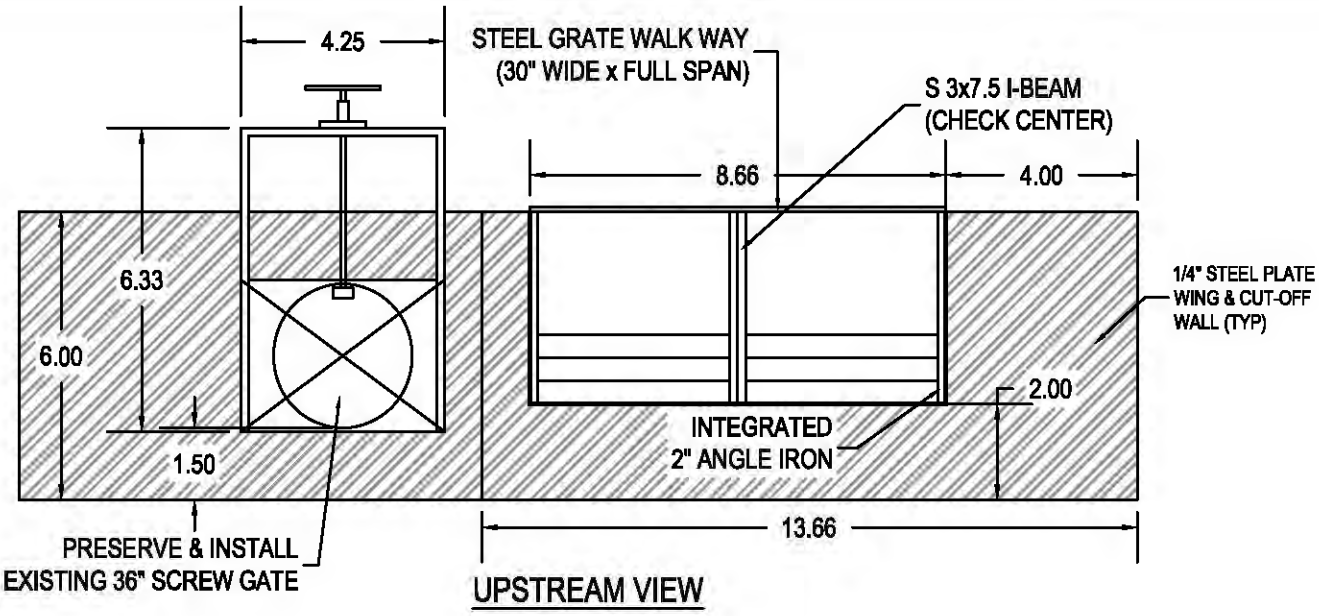

UPSTREAM VIEW

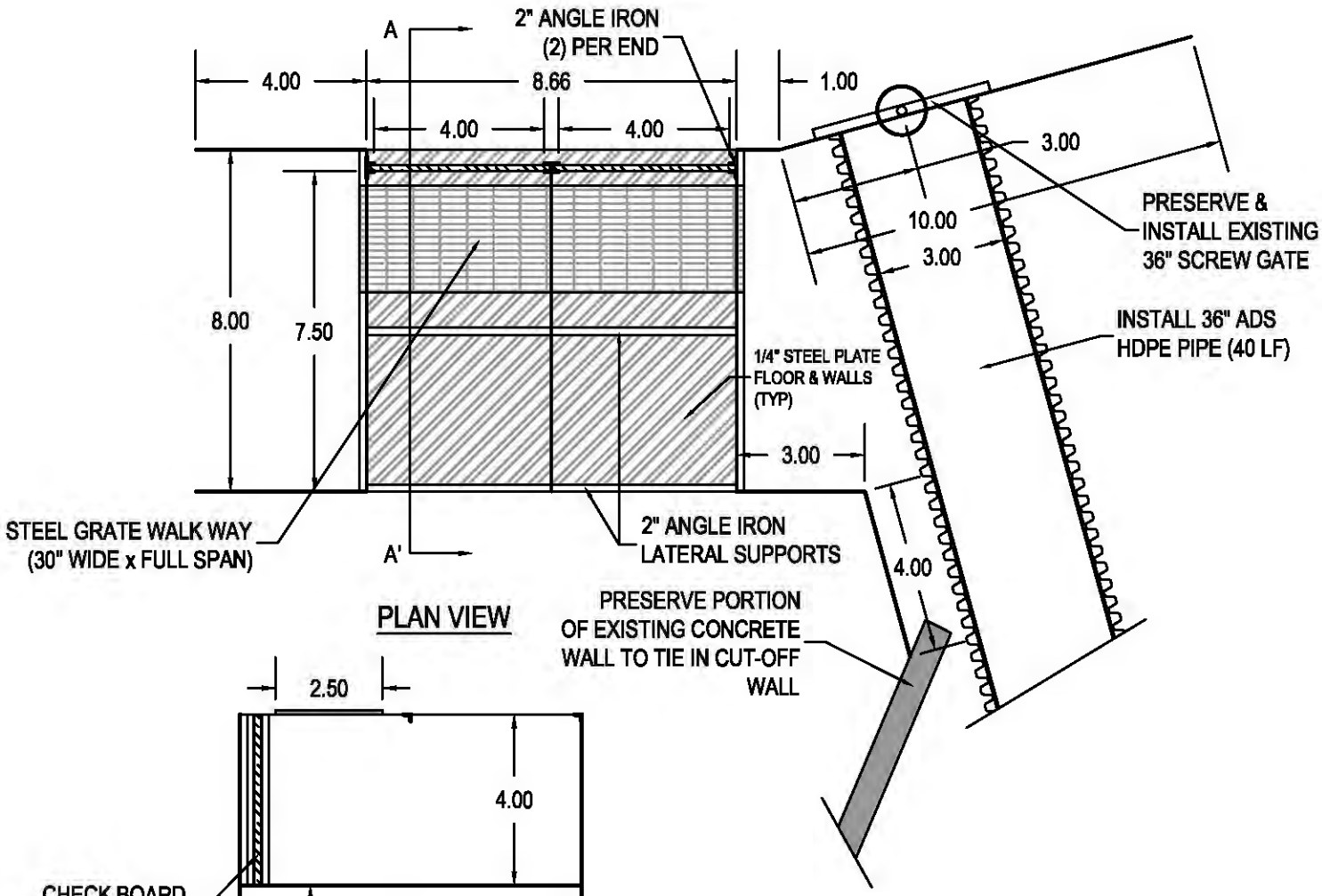

PLAN VIEW

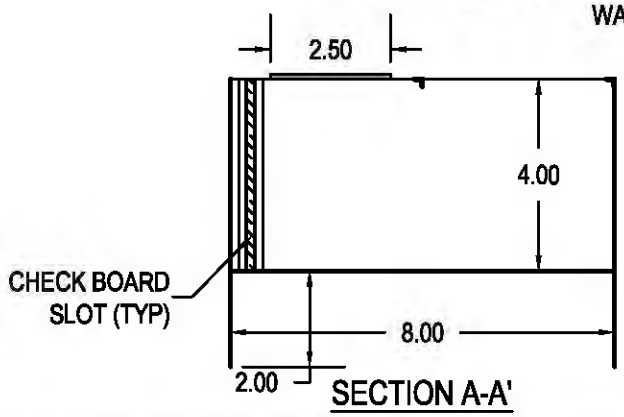

SECTION A-A'

SCALE: 1"=4'

PAGE: 2 OF 2	JOB NO: 4183	REV:	DATE: 7/17/17	CHECKED BY: MCE	DRAWN BY: MTJ	DESIGNED BY: MTJ

WWDC–NEW FORK RIVER WATERSHED
MASTER PLAN–LEVEL I STUDY
WILLOW CREEK RANCH (EC WALKER DITCH DIVERSION REHAB)
LOCATED IN SECTION 13, T.35N., R.110W.,
SUBLETTE COUNTY, WY

RIO VERDE ENGINEERING
(307) 367-2826
FAX# (307)-367-2546
PINEDALE, WYOMING

NEW FORK RIVER WATERSHED STUDY LEVEL I

Owner/Operator: Willow Creek Ranch
Project Type: Irrigation
Project ID: 30
Project Name: Seedings Meadow Rehabilitation Project
Location (PLSS): Sec. 12, T.35N., R.110W.
Location (Lat/Long): 43.02025°, 109.92849°

PROJECT COMPONENTS - ITEMIZED COSTS

ITEM No.	DESCRIPTION	QUANTITY	UNIT	UNIT COST	TOTAL COST
1	Mobilization	1	LS	$ 1,000.00	$ 1,000.00
2	Bonds	1	LS	$ 300.00	$ 300.00
3	6" ADS Pipe (Installed)	10	LF	$ 25.00	$ 250.00
4	8" ADS Pipe (Installed)	35	LF	$ 30.00	$ 1,050.00
5	10" ADS Pipe (Installed)	15	LF	$ 36.00	$ 540.00
6	12" ADS Pipe (Installed)	5	LF	$ 40.00	$ 200.00
7	6" Distributing Gate (Installed)	2	EA	$ 330.00	$ 660.00
8	8" Distributing Gate (Installed)	7	EA	$ 350.00	$ 2,450.00
9	10" Distributing Gate (Installed)	3	EA	$ 375.00	$ 1,125.00
10	12" Distributing Gate (Installed)	1	EA	$ 400.00	$ 400.00
				TOTAL COMPONENT COST (SUBTOTAL #2):	$ 7,975.00

PREPARATION OF FINAL DESIGNS & SPECIFICATIONS:	$ 800.00
PERMITTING AND MITIGATION:	$ -
LEGAL FEES:	$ -
ACQUISTION OF ACCESS AND RIGHTS-OF-WAY:	$ -
PRE-CONSTRUCTION COSTS (**SUBTOTAL #1**):	$ 800.00
TOTAL COMPONENT COST **(SUBTOTAL #2**):	$ 7,975.00
CONSTRUCTION ENGINEERING COST (SUBTOTAL #2 x 10%):	$ 797.50
COMPONENTS AND ENGINEERING COSTS (**SUBTOTAL #3**):	$ 8,772.50
CONTINGENCY (SUBTOTAL #3 X 15%):	$ 1,315.88
TOTAL CONSTRUCTION COST (**SUBTOTAL #4**):	$ 10,088.38
TOTAL PROJECT COST (**SUBTOTAL #1 + SUBTOTAL #4**):	**$ 10,888.38**

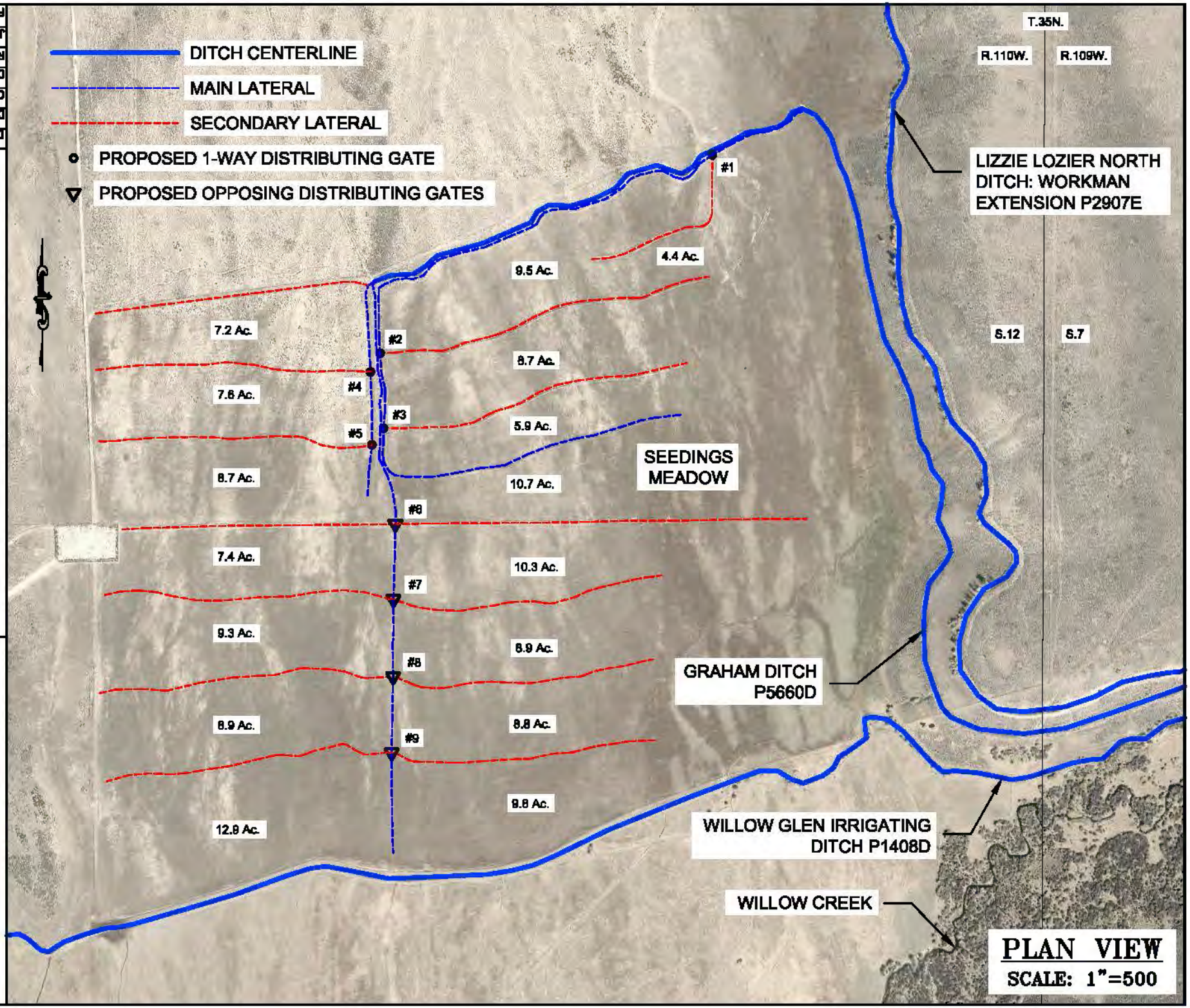

PLAN VIEW

SCALE: 1"=500

WWDC–NEW FORK RIVER WATERSHED

MASTER PLAN–LEVEL I STUDY

WILLOW CREEK RANCH (SEEDINGS MEADOW REHAB)
LOCATED IN SECTION 12, T.35N., R.110W.,
SUBLETTE COUNTY, WY

DESIGNED BY: MJ
DRAWN BY: MJ
CHECKED BY: MCE
DATE: 6/2/17
REV:
JOB NO: 4183
PAGE: 1 OF 3

RIO VERDE ENGINEERING
(307) 367-2828
FAX (307)-367-2546
PINEDALE, WYOMING

INDIVIDUAL DISTRIBUTING GATE SCHEDULE

DIVERSION #	LATERAL DIRECTION	IRRIGABLE AREA	2 CFS / 70 Ac.	DISTRIBUTING GATE SIZE
#1	SOUTH	4.4 Ac.	0.13 CFS	6"
#2	EAST	8.7 Ac.	0.25 CFS	8"
#3	EAST	5.9 Ac.	0.17 CFS	8"
#4	WEST	7.6 Ac.	0.22 CFS	8"
#5	WEST	8.7 Ac.	0.25 CFS	8"
#6	EAST	10.3 Ac.	0.29 CFS	10"
	WEST	7.4 Ac.	0.21 CFS	8"
#7	EAST	8.9 Ac.	0.25 CFS	8"
	WEST	9.3 Ac.	0.27 CFS	10"
#6	EAST	8.8 Ac.	0.25 CFS	8"
	WEST	8.9 Ac.	0.25 CFS	8"
#9	EAST	9.8 Ac.	0.28 CFS	10"
	WEST	12.9 Ac.	0.37 CFS	12"

INDIVIDUAL PIPE SCHEDULE

DIVERSION #	LATERAL DIRECTION	ADS PIPE SIZE
#1	SOUTH	6"
#2	EAST	8"
#3	EAST	6"
#4	WEST	8"
#5	WEST	8"
#6	EAST	10"
	WEST	8"
#7	EAST	8"
	WEST	10"
#8	EAST	8"
	WEST	8"
#9	EAST	10"
	WEST	12"

TOTAL PIPE SCHEDULE

ADS PIPE SIZE	LENGTH (LF)
6"	10'
8"	35'
10"	15'
12"	5'

TOTAL DISTRIBUTING GATE SCHEDULE

GATE SIZE	GATE QTY. (EA)
6"	2
8"	7
10"	3
12"	1

WWDC-NEW FORK RIVER WATERSHED
MASTER PLAN-LEVEL I STUDY
WILLOW CREEK RANCH (SEEDINGS MEADOW REHAB)
LOCATED IN SECTION 12, T.35N., R.110W.,
SUBLETTE COUNTY, WY

DESIGNED BY: MTJ
DRAWN BY: MTJ
CHECKED BY: MCE
DATE: 6/2/17
REV:
JOB NO: 4183
PAGE: 2 OF 3

RIO VERDE ENGINEERING
PINEDALE, WYOMING
(307) 367-2828
FAX (307)-367-2548

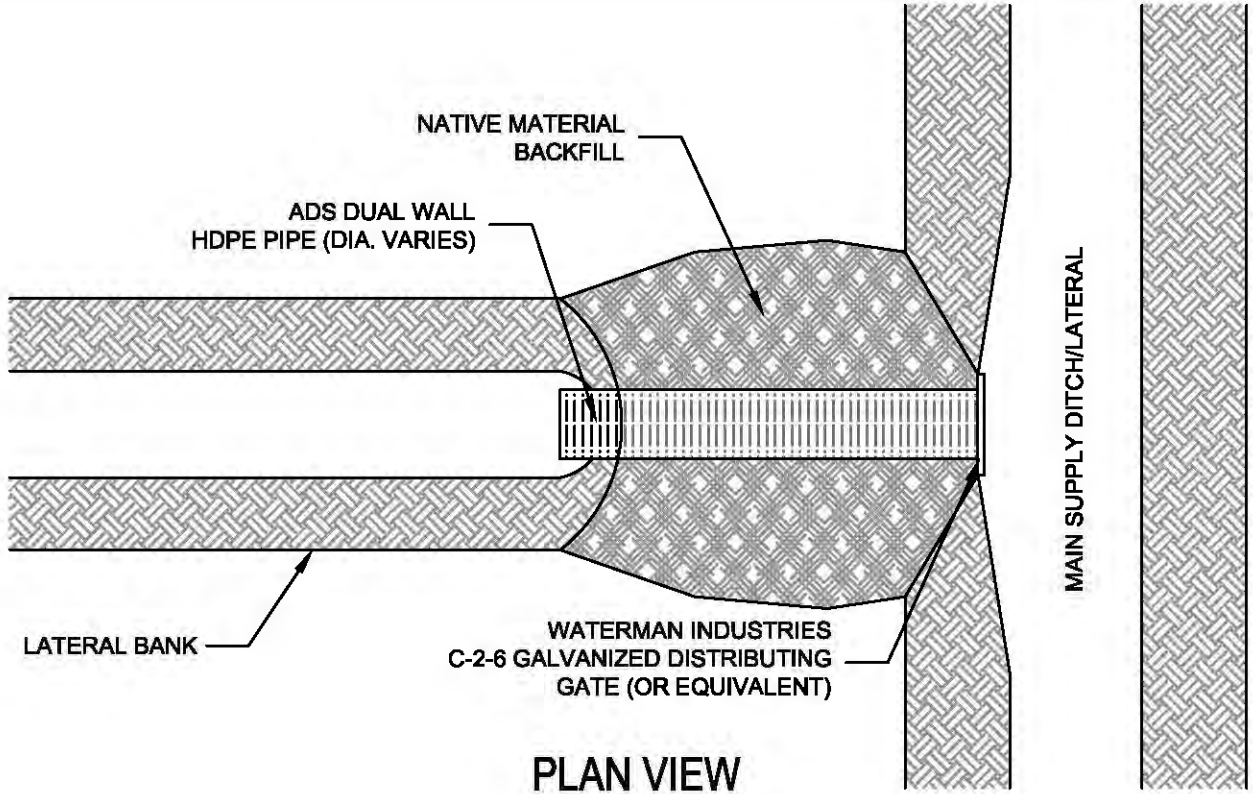

PLAN VIEW

N.T.S.

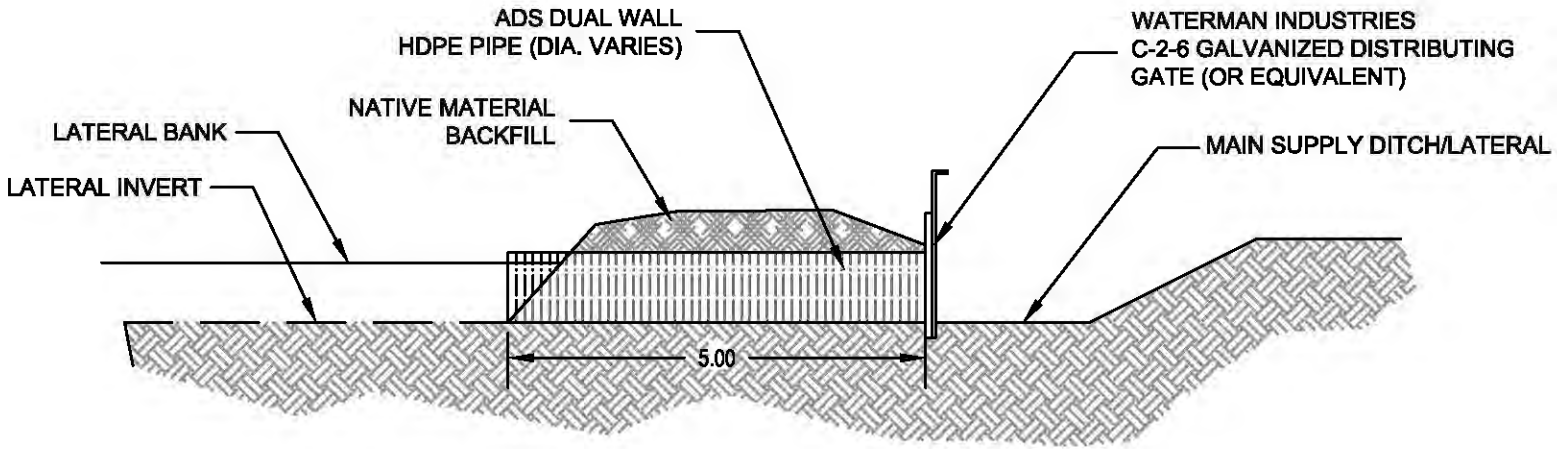

PROFILE VIEW

N.T.S.

STANDARD DETAIL
WATER
DISTRIBUTING GATE

RIO VERDE
ENGINEERING
PINEDALE, WYOMING
(307) 367-2828
FAX# (307)-367-2546

DESIGNED BY:	
DRAWN BY:	MTJ
CHECKED BY:	MCE
DATE:	6/05/17
REV:	
JOB NO:	4183
PAGE:	3 OF 3

NEW FORK RIVER WATERSHED STUDY LEVEL I

Owner/Operator: Willow Creek Ranch
Project Type: Small Water Storage
Project ID: 62-1
Project Name: Lower State Reservoir - 1
Location (PLSS): NW 1/4 Sec. 1, T.35N., R.110W.
Location (Lat/Long): 43.0395°, 109.9327°
Area: 2.61 Acres
Volume: 8.57 Acre-ft

PROJECT COMPONENTS - ITEMIZED COSTS

ITEM No.	DESCRIPTION	QUANTITY	UNIT	UNIT COST	TOTAL COST
1	Mobilization	1	LS	$ 3,500.00	$ 3,500.00
2	Bonds	1	LS	$ 1,200.00	$ 1,200.00
3	Topsoil Stripping & Placement	2.61	AC	$ 2,300.00	$ 6,003.00
4	Cut	10,369	CY	$ 2.85	$ 29,551.65
5	Dam Embankment	3,800	CY	$ 2.85	$ 10,830.00
6	Principal Outlet Structure	1	LS	$ 2,750.00	$ 2,750.00
7	Lining	2.61	AC	$ 5,000.00	$ 13,050.00
				TOTAL COMPONENT COST (SUBTOTAL #2):	$ 66,884.65

PREPARATION OF FINAL DESIGNS & SPECIFICATIONS:	$ 5,000.00
PERMITTING AND MITIGATION:	$ 3,500.00
LEGAL FEES:	$ 1,500.00
ACQUISTION OF ACCESS AND RIGHTS-OF-WAY:	$ -
PRE-CONSTRUCTION COSTS (**SUBTOTAL #1**):	$ 10,000.00
TOTAL COMPONENT COST **(SUBTOTAL #2**):	$ 66,884.65
CONSTRUCTION ENGINEERING COST (SUBTOTAL #2 x 10%):	$ 6,688.47
COMPONENTS AND ENGINEERING COSTS (**SUBTOTAL #3**):	$ 73,573.12
CONTINGENCY (SUBTOTAL #3 X 15%):	$ 11,035.97
TOTAL CONSTRUCTION COST (**SUBTOTAL #4**):	$ 84,609.08
TOTAL PROJECT COST (**SUBTOTAL #1 + SUBTOTAL #4**):	**$ 94,609.08**

NEW FORK RIVER WATERSHED STUDY LEVEL I

Owner/Operator: Willow Creek Ranch
Project Type: Small Water Storage
Project ID: 62-2
Project Name: Lower State Reservoir - 2
Location (PLSS): NW 1/4 Sec. 1, T.35N., R.110W.
Location (Lat/Long): 43.0395°, 109.9327°
Area: 3.86 Acres
Volume: 11.19 Acre-ft

PROJECT COMPONENTS - ITEMIZED COSTS

ITEM No.	DESCRIPTION	QUANTITY	UNIT	UNIT COST	TOTAL COST
1	Mobilization	1	LS	$ 5,000.00	$ 5,000.00
2	Bonds	1	LS	$ 1,000.00	$ 1,000.00
3	Topsoil Stripping & Placement	3.86	AC	$ 2,300.00	$ 8,878.00
4	Cut	13,540	CY	$ 2.85	$ 38,588.29
5	Dam Embankment	4,200	CY	$ 2.85	$ 11,970.00
6	Principal Outlet Structure	1	LS	$ 2,750.00	$ 2,750.00
7	Lining	3.86	AC	$ 5,000.00	$ 19,300.00
				TOTAL COMPONENT COST (SUBTOTAL #2):	$ 87,486.29

PREPARATION OF FINAL DESIGNS & SPECIFICATIONS:	$ 5,000.00
PERMITTING AND MITIGATION:	$ 3,500.00
LEGAL FEES:	$ 1,500.00
ACQUISTION OF ACCESS AND RIGHTS-OF-WAY:	$ -
PRE-CONSTRUCTION COSTS (**SUBTOTAL #1**):	$ 10,000.00
TOTAL COMPONENT COST **(SUBTOTAL #2**):	$ 87,486.29
CONSTRUCTION ENGINEERING COST (SUBTOTAL #2 x 10%):	$ 8,748.63
COMPONENTS AND ENGINEERING COSTS (**SUBTOTAL #3**):	$ 96,234.92
CONTINGENCY (SUBTOTAL #3 X 15%):	$ 14,435.24
TOTAL CONSTRUCTION COST (**SUBTOTAL #4**):	$ 110,670.15
TOTAL PROJECT COST (**SUBTOTAL #1 + SUBTOTAL #4**):	**$ 120,670.15**

NEW FORK RIVER WATERSHED STUDY LEVEL I

Owner/Operator: Willow Creek Ranch
Project Type: Small Water Storage
Project ID: 62-3
Project Name: Lower State Reservoir Project - 3
Location (PLSS): NW 1/4 Sec. 1, T.35N., R.110W.
Location (Lat/Long): 43.0395°, 109.9327°
Area: 2.22 Acres
Volume: 5.15 Acre-ft

PROJECT COMPONENTS - ITEMIZED COSTS

ITEM No.	DESCRIPTION	QUANTITY	UNIT	UNIT COST	TOTAL COST
1	Mobilization	1	LS	$ 3,500.00	$ 3,500.00
2	Bonds	1	LS	$ 5,000.00	$ 5,000.00
3	Topsoil Stripping & Placement	2.22	AC	$ 2,300.00	$ 5,106.00
4	Cut	6,231	CY	$ 2.85	$ 17,758.35
5	Dam Embankment	3,200	CY	$ 2.85	$ 9,120.00
6	Principal Outlet Structure	1	LS	$ 2,750.00	$ 2,750.00
7	Lining	2.22	AC	$ 8,750.00	$ 19,425.00
				TOTAL COMPONENT COST (SUBTOTAL #2):	$ 62,659.35

PREPARATION OF FINAL DESIGNS & SPECIFICATIONS:	$ 5,000.00
PERMITTING AND MITIGATION:	$ 3,500.00
LEGAL FEES:	$ 1,500.00
ACQUISTION OF ACCESS AND RIGHTS-OF-WAY:	$ -
PRE-CONSTRUCTION COSTS (**SUBTOTAL #1**):	$ 10,000.00
TOTAL COMPONENT COST (**SUBTOTAL #2**):	$ 62,659.35
CONSTRUCTION ENGINEERING COST (SUBTOTAL #2 x 10%):	$ 6,265.94
COMPONENTS AND ENGINEERING COSTS (**SUBTOTAL #3**):	$ 68,925.29
CONTINGENCY (SUBTOTAL #3 X 15%):	$ 10,338.79
TOTAL CONSTRUCTION COST (**SUBTOTAL #4**):	$ 79,264.08
TOTAL PROJECT COST (**SUBTOTAL #1 + SUBTOTAL #4**):	**$ 89,264.08**

NEW FORK RIVER WATERSHED STUDY LEVEL I

Owner/Operator: Willow Creek Ranch
Project Type: Small Water Storage
Project ID: 63-1
Project Name: Dumpy Creek Reservoir - 1
Location (PLSS): NE 1/4 Sec. 14, T.35N., R.110W.
Location (Lat/Long): 43.0095°, 109.9491°
Area: 4.02 Acres
Volume: 15.71 Acre-ft

PROJECT COMPONENTS - ITEMIZED COSTS

ITEM No.	DESCRIPTION	QUANTITY	UNIT	UNIT COST	TOTAL COST
1	Mobilization	1	LS	$ 3,500.00	$ 3,500.00
2	Bonds	1	LS	$ 1,200.00	$ 1,200.00
3	Topsoil Stripping & Placement	4.02	AC	$ 2,300.00	$ 9,246.00
4	Cut	14,000	CY	$ 2.85	$ 39,900.00
5	Dam Embankment	6,500	CY	$ 2.85	$ 18,525.00
6	Principal Outlet Structure	1	LS	$ 2,750.00	$ 2,750.00
7	Lining	4.02	AC	$ 5,000.00	$ 20,100.00
				TOTAL COMPONENT COST (SUBTOTAL #2):	$ 95,221.00

PREPARATION OF FINAL DESIGNS & SPECIFICATIONS:	$ 2,000.00
PERMITTING AND MITIGATION:	$ 3,000.00
LEGAL FEES:	$ 1,000.00
ACQUISTION OF ACCESS AND RIGHTS-OF-WAY:	$ -
PRE-CONSTRUCTION COSTS (**SUBTOTAL #1**):	$ 6,000.00
TOTAL COMPONENT COST **(SUBTOTAL #2**):	$ 95,221.00
CONSTRUCTION ENGINEERING COST (SUBTOTAL #2 x 10%):	$ 9,522.10
COMPONENTS AND ENGINEERING COSTS (**SUBTOTAL #3**):	$ 104,743.10
CONTINGENCY (SUBTOTAL #3 X 15%):	$ 15,711.47
TOTAL CONSTRUCTION COST (**SUBTOTAL #4**):	$ 120,454.57
TOTAL PROJECT COST (**SUBTOTAL #1 + SUBTOTAL #4**):	**$ 126,454.57**

NEW FORK RIVER WATERSHED STUDY LEVEL I

Owner/Operator: Willow Creek Ranch
Project Type: Small Water Storage
Project ID: 63-2
Project Name: Dumpy Creek Reservoir - 2
Location (PLSS): NE 1/4 Sec. 14, T.35N., R.110W.
Location (Lat/Long): 43.0095°, 109.9491°
Area: 0.27 Acres
Volume: 0.63 Acre-ft

PROJECT COMPONENTS - ITEMIZED COSTS

ITEM No.	DESCRIPTION	QUANTITY	UNIT	UNIT COST	TOTAL COST
1	Mobilization	1	LS	$ 1,500.00	$ 1,500.00
2	Bonds	1	LS	$ 500.00	$ 500.00
3	Topsoil Stripping & Placement	0.27	AC	$ 2,300.00	$ 621.00
4	Cut	762	CY	$ 2.85	$ 2,171.70
5	Dam Embankment	100	CY	$ 2.85	$ 285.00
6	Principal Outlet Structure	1	LS	$ 2,750.00	$ 2,750.00
				TOTAL COMPONENT COST (SUBTOTAL #2):	$ 7,827.70

PREPARATION OF FINAL DESIGNS & SPECIFICATIONS:	$ 1,500.00
PERMITTING AND MITIGATION:	$ 500.00
LEGAL FEES:	$ 500.00
ACQUISTION OF ACCESS AND RIGHTS-OF-WAY:	$ -
PRE-CONSTRUCTION COSTS (**SUBTOTAL #1**):	$ 2,500.00
TOTAL COMPONENT COST **(SUBTOTAL #2**):	$ 7,827.70
CONSTRUCTION ENGINEERING COST (SUBTOTAL #2 x 10%):	$ 782.77
COMPONENTS AND ENGINEERING COSTS (**SUBTOTAL #3**):	$ 8,610.47
CONTINGENCY (SUBTOTAL #3 X 15%):	$ 1,291.57
TOTAL CONSTRUCTION COST (**SUBTOTAL #4**):	$ 9,902.04
TOTAL PROJECT COST (**SUBTOTAL #1 + SUBTOTAL #4**):	**$ 12,402.04**

NEW FORK RIVER WATERSHED STUDY LEVEL I

Owner/Operator: Willow Creek Ranch
Project Type: Small Water Storage
Project ID: 63-3
Project Name: Dumpy Creek Reservoir - 3
Location (PLSS): NE 1/4 Sec. 14, T.35N., R.110W.
Location (Lat/Long): 43.0095°, 109.9491°
Area: 0.24 Acres
Volume: 0.46 Acre-ft

PROJECT COMPONENTS - ITEMIZED COSTS

ITEM No.	DESCRIPTION	QUANTITY	UNIT	UNIT COST	TOTAL COST
1	Mobilization	1	LS	$ 1,500.00	$ 1,500.00
2	Bonds	1	LS	$ 500.00	$ 500.00
3	Topsoil Stripping & Placement	0.24	AC	$ 2,300.00	$ 552.00
4	Cut	557	CY	$ 2.85	$ 1,586.03
5	Dam Embankment	100	CY	$ 2.85	$ 285.00
6	Principal Outlet Structure	1	LS	$ 2,750.00	$ 2,750.00
				TOTAL COMPONENT COST (SUBTOTAL #2):	$ 7,173.03

PREPARATION OF FINAL DESIGNS & SPECIFICATIONS:	$ 1,500.00
PERMITTING AND MITIGATION:	$ 500.00
LEGAL FEES:	$ 500.00
ACQUISTION OF ACCESS AND RIGHTS-OF-WAY:	$ -
PRE-CONSTRUCTION COSTS (**SUBTOTAL #1**):	$ 2,500.00
TOTAL COMPONENT COST **(SUBTOTAL #2**):	$ 7,173.03
CONSTRUCTION ENGINEERING COST (SUBTOTAL #2 x 10%):	$ 717.30
COMPONENTS AND ENGINEERING COSTS (**SUBTOTAL #3**):	$ 7,890.33
CONTINGENCY (SUBTOTAL #3 X 15%):	$ 1,183.55
TOTAL CONSTRUCTION COST (**SUBTOTAL #4**):	$ 9,073.88
TOTAL PROJECT COST (**SUBTOTAL #1 + SUBTOTAL #4**):	**$ 11,573.88**

NEW FORK RIVER WATERSHED STUDY LEVEL I

Owner/Operator: Willow Creek Ranch
Project Type: Small Water Storage
Project ID: 63-4
Project Name: Dumpy Creek Reservoir - 4
Location (PLSS): NE 1/4 Sec. 14, T.35N., R.110W.
Location (Lat/Long): 43.0095°, 109.9491°
Area: 0.30 Acres
Volume: 0.85 Acre-ft

PROJECT COMPONENTS - ITEMIZED COSTS

ITEM No.	DESCRIPTION	QUANTITY	UNIT	UNIT COST	TOTAL COST
1	Mobilization	1	LS	$ 1,500.00	$ 1,500.00
2	Bonds	1	LS	$ 500.00	$ 500.00
3	Topsoil Stripping & Placement	0.3	AC	$ 2,300.00	$ 690.00
4	Cut	1,028	CY	$ 2.85	$ 2,930.51
5	Dam Embankment	100	CY	$ 2.85	$ 285.00
6	Principal Outlet Structure	1	LS	$ 2,750.00	$ 2,750.00
				TOTAL COMPONENT COST (SUBTOTAL #2):	$ 8,655.51

PREPARATION OF FINAL DESIGNS & SPECIFICATIONS:	$ 1,500.00
PERMITTING AND MITIGATION:	$ 500.00
LEGAL FEES:	$ 500.00
ACQUISTION OF ACCESS AND RIGHTS-OF-WAY:	$ -
PRE-CONSTRUCTION COSTS (**SUBTOTAL #1**):	$ 2,500.00
TOTAL COMPONENT COST **(SUBTOTAL #2**):	$ 8,655.51
CONSTRUCTION ENGINEERING COST (SUBTOTAL #2 x 10%):	$ 865.55
COMPONENTS AND ENGINEERING COSTS (**SUBTOTAL #3**):	$ 9,521.06
CONTINGENCY (SUBTOTAL #3 X 15%):	$ 1,428.16
TOTAL CONSTRUCTION COST (**SUBTOTAL #4**):	$ 10,949.22
TOTAL PROJECT COST (**SUBTOTAL #1 + SUBTOTAL #4**):	**$ 13,449.22**

NEW FORK RIVER WATERSHED STUDY LEVEL I

Owner/Operator: Willow Creek Ranch
Project Type: Small Water Storage
Project ID: 63-5
Project Name: Dumpy Creek Reservoir - 5
Location (PLSS): NE 1/4 Sec. 14, T.35N., R.110W.
Location (Lat/Long): 43.0095°, 109.9491°
Area: 0.37 Acres
Volume: 0.49 Acre-ft

PROJECT COMPONENTS - ITEMIZED COSTS

ITEM No.	DESCRIPTION	QUANTITY	UNIT	UNIT COST	TOTAL COST
1	Mobilization	1	LS	$ 1,500.00	$ 1,500.00
2	Bonds	1	LS	$ 500.00	$ 500.00
3	Topsoil Stripping & Placement	0.37	AC	$ 2,300.00	$ 851.00
4	Cut	895	CY	$ 2.85	$ 2,550.04
5	Dam Embankment	100	CY	$ 2.85	$ 285.00
6	Principal Outlet Structure	1	LS	$ 2,750.00	$ 2,750.00
				TOTAL COMPONENT COST (SUBTOTAL #2):	$ 8,436.04

PREPARATION OF FINAL DESIGNS & SPECIFICATIONS:	$ 1,500.00
PERMITTING AND MITIGATION:	$ 500.00
LEGAL FEES:	$ 500.00
ACQUISTION OF ACCESS AND RIGHTS-OF-WAY:	$ -
PRE-CONSTRUCTION COSTS (**SUBTOTAL #1**):	$ 2,500.00
TOTAL COMPONENT COST **(SUBTOTAL #2**):	$ 8,436.04
CONSTRUCTION ENGINEERING COST (SUBTOTAL #2 x 10%):	$ 843.60
COMPONENTS AND ENGINEERING COSTS (**SUBTOTAL #3**):	$ 9,279.64
CONTINGENCY (SUBTOTAL #3 X 15%):	$ 1,391.95
TOTAL CONSTRUCTION COST (**SUBTOTAL #4**):	$ 10,671.59
TOTAL PROJECT COST (**SUBTOTAL #1 + SUBTOTAL #4**):	**$ 13,171.59**

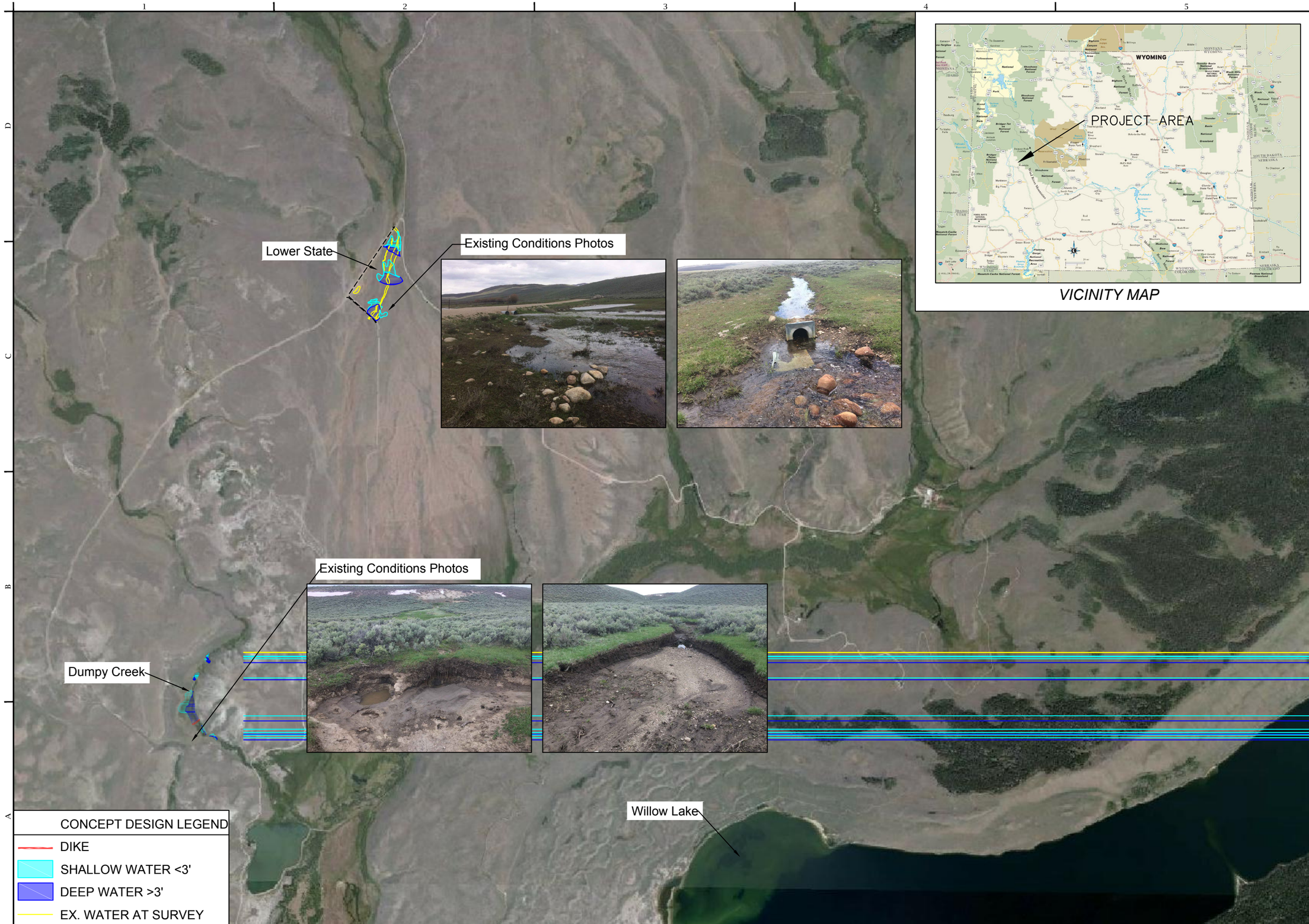

INTERMOUNTAIN AQUATICS INC.
ENVIRONMENTAL CONSULTING & HABITAT RESTORATION
P.O. Box 1115 - 116 Mustang Drive
Driggs, ID 83422
tel:208.354.3690 fax:208.247.0941
www.intermountainaquatics.com

Willow Creek Ranch

Proposed Stockwater Storage

Sublette, WY

Scale: 1" = 2000'

0 1000' 2000' 4000'

IF PLOTTED ON 11"x17" SIZE, ADJUST ACCORDINGLY BASED ON PAPER SIZE

DATE: July 13, 2017

DRAWN BY: EA

CHECKED BY: KS

JOB NAME: STOCKWATER CONCEPT.DWG

FILE: WCR STOCKWATER CONCEPT.DWG

REVISIONS:

Overview

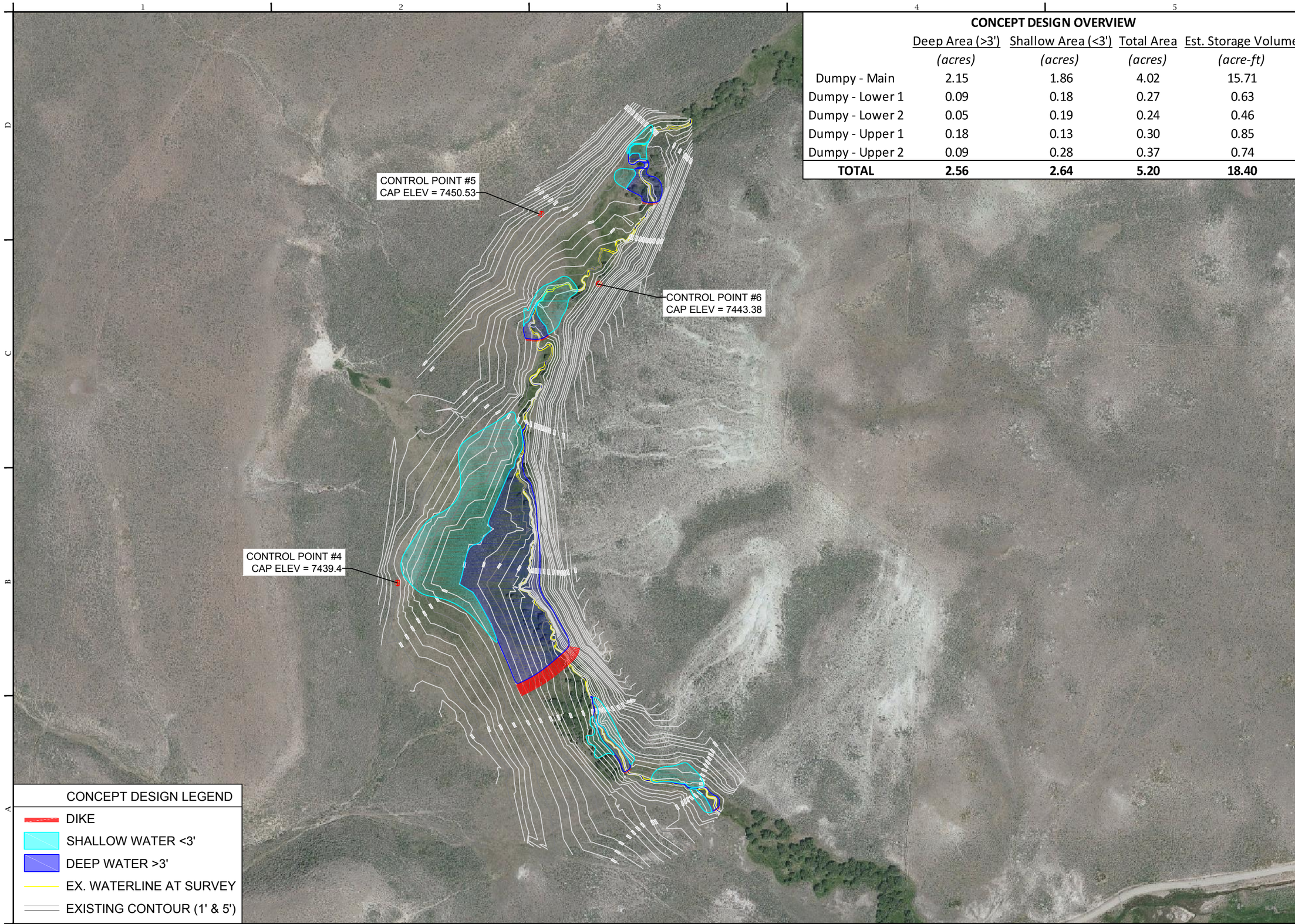

CONCEPT DESIGN OVERVIEW

	Deep Area (>3')	Shallow Area (<3')	Total Area	Est. Storage Volume
	(acres)	*(acres)*	*(acres)*	*(acre-ft)*
Dumpy - Main	2.15	1.86	4.02	15.71
Dumpy - Lower 1	0.09	0.18	0.27	0.63
Dumpy - Lower 2	0.05	0.19	0.24	0.46
Dumpy - Upper 1	0.18	0.13	0.30	0.85
Dumpy - Upper 2	0.09	0.28	0.37	0.74
TOTAL	**2.56**	**2.64**	**5.20**	**18.40**

INTERMOUNTAIN AQUATICS INC.
ENVIRONMENTAL CONSULTING & HABITAT RESTORATION
P.O. Box 1115 - 116 Mustang Drive
Driggs, ID 83422
tel:208.354.3690 fax:208.247.0941
www.intermountainaquatics.com

Willow Creek Ranch

Proposed Stockwater Storage

Sublette, WY

Scale: 1" = 250'

0 125 250 500

IF PLOTTED ON 11"x17" SIZE, ADJUST ACCORDINGLY BASED ON PAPER SIZE

DATE: July 13, 2017

DRAWN BY: EA

CHECKED BY: KS

JOB NAME: STOCKWATER CONCEPT.DWG

FILE: WCR STOCKWATER CONCEPT.DWG

REVISIONS:

Dumpy Crk

CONCEPT DESIGN OVERVIEW

	Deep Area (>3')	Shallow Area (<3')	Total Area	Est. Storage Volume
	(acres)	*(acres)*	*(acres)*	*(acre-ft)*
Lower at Road	1.55	1.05	2.61	8.57
Middle	2.16	1.69	3.86	11.19
Upper	0.91	1.31	2.22	5.15
TOTAL	**4.63**	**4.06**	**8.68**	**24.92**

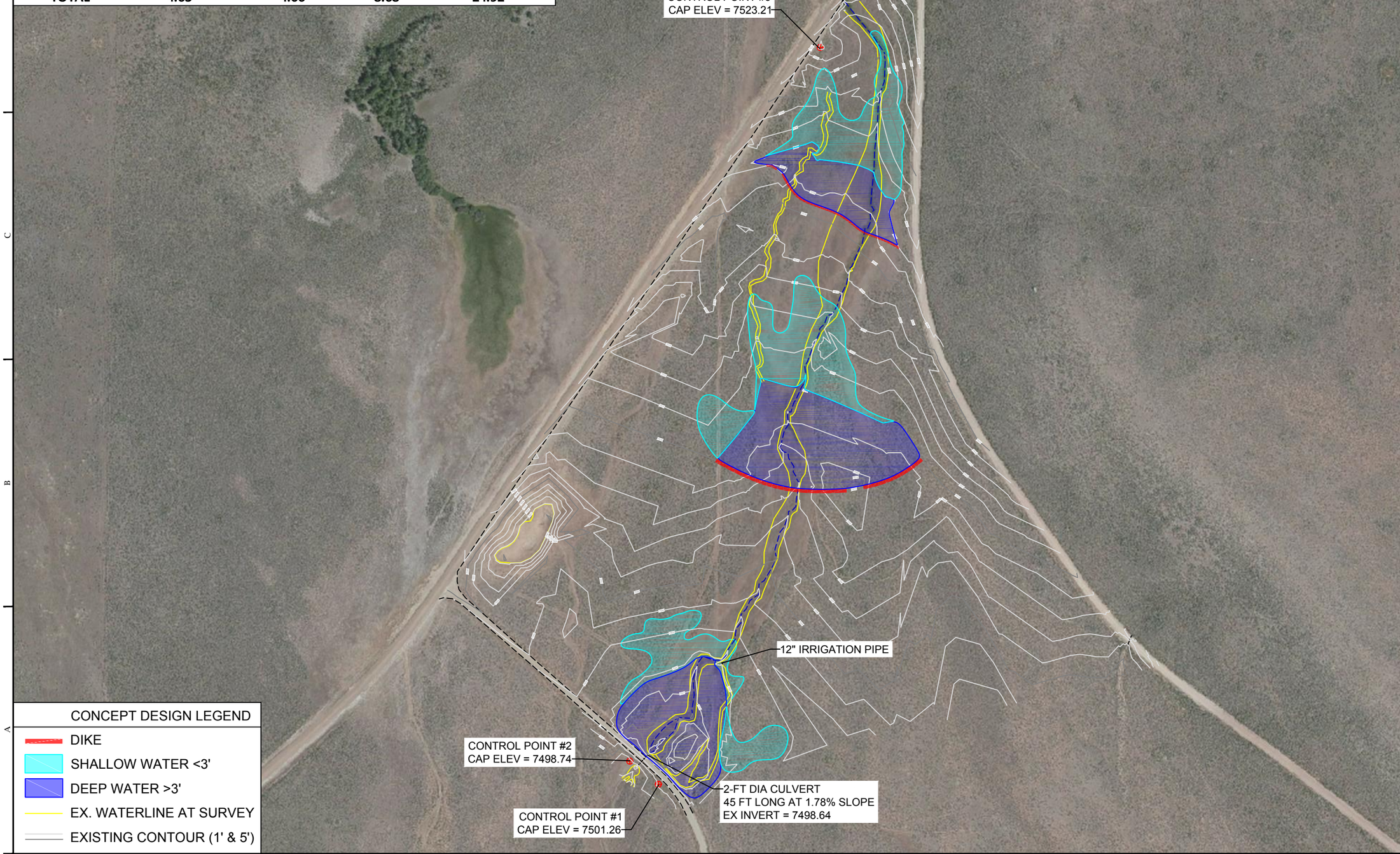

INTERMOUNTAIN AQUATICS INC.
ENVIRONMENTAL CONSULTING & HABITAT RESTORATION
P.O. Box 1115 - 116 Mustang Drive
Driggs, ID 83422
tel:208.354.3690 fax:208.247.0941
www.intermountainaquatics.com

Willow Creek Ranch

Proposed Stockwater Storage

Sublette, WY

Scale: 1" = 250'

0 125 250 500

IF PLOTTED ON 11"x17" SIZE, ADJUST ACCORDINGLY BASED ON PAPER SIZE

DATE: July 13, 2017

DRAWN BY: EA

CHECKED BY: KS

JOB NAME: STOCKWATER CONCEPT.DWG

FILE: WCR STOCKWATER CONCEPT.DWG

REVISIONS:

Lower State

Appendix O.
Reservoir Screening Evaluation

This page is left intentionally blank.

MEMORANDUM

Project 16123

TO: Ron Steg – Tetra Tech, Inc.

FROM: Edwin Friend, P.E., P.G., PMP - RJH Consultants, Inc.

DATE: July 25, 2017

RE: New Fork River Watershed, Task 5
Screening Memorandum

Introduction

RJH Consultants, Inc. (RJH), in cooperation with Tetra Tech, Inc. (Tetra Tech) and Rio Verde Engineering, developed and evaluated a list of forty dam and reservoir alternatives to provide additional water storage for the New Fork Irrigation District. For this study, a minimum desired reservoir pool of 5,000 acre-feet (ac-ft) was selected. Three preferred alternatives were identified for further evaluation and are described in the *New Fork River Level I Watershed Study: Concept Memorandum* (RJH, 2017a). This memorandum describes the development of the initial list of alternatives and summarizes the rationale used for scoring and ranking the alternatives. Scores were developed for technical, environmental, and permitting characteristics at each alternative. Detailed scoring information for each of the characteristics is provided in Appendix A. RJH completed the following scope of services:

- Obtained and reviewed published geologic literature and maps near proposed dam and reservoir sites.
- Reviewed previous documentation and past reports, where available, and identified previously studied potential storage sites.
- Identified new potential storage sites.
- Identified factors and conditions that are expected to significantly impact design and construction of a dam at each site.
- Developed a scoring matrix to assist in evaluating and ranking the alternative sites.
- Participated in a site visit to four proposed sites with the consultant team on June 13, 2017.
- Selected three preferred sites with the consultant team.

Alternative Identification

Potential reservoir sites were identified to provide additional water storage opportunities and flood control needs within the watershed. Of the forty sites:

- Twelve were identified through the Feasibility Study Report completed by RJH during April 2017 (RJH, 2017b) for the New Fork Lake Dam Enlargement Level II (Phase I) Study.

- Nineteen were identified through review of previously completed studies within the watershed.
- Nine were identified by RJH as new potential sites with minimum storage of 5,000 ac-ft.

Alternatives included modifications to existing dams, enlargement of existing glacial lakes, and construction of new dams. New dams included on-channel dams that could be filled from direct stream inflows and off-channel dams that would require a new water conveyance canal or pipeline to fill the reservoir. One new potential site, Site 9, is located outside the watershed and would require a canal or pipeline to convey water into the New Fork River watershed. A summary table of the alternatives is provided in Appendix B.

The locations of the alternatives are shown on Figure 1.

Comparison Evaluation

Screening Rational

A scoring matrix was developed to assist in evaluating and ranking the alternatives. The scoring matrix was divided into sixteen categories including seven technical categories, three permitting categories, five environmental categories, and one category of other considerations. The technical categories consisted of storage, water delivery, supply conveyance, geotechnical feasibility, downstream risk, recreation, and land ownership. The permitting categories consisted of location within wilderness areas, cultural resources, and ability to permit. The environmental categories consisted of wetlands impacts, sensitive species, sage grouse, big game impacts, and fish impacts. Other considerations were listed if specific fatal flaws were identified that would likely severely inhibit or preclude development. Except for land ownership, scores for technical categories along with the ability to permit category were developed by RJH, scores for environmental categories and cultural resources were developed by Tetra Tech, and the land ownership score was developed by Rio Verde Engineering. Initial scoring and rationale for the categories completed by Tetra Tech are provided in Appendix C.

Categories were scored on a scale of 1 to 10, with 10 being the most suitable and 1 being the least suitable. Weighting factors were applied to each category, based on the influence each category will have on project development. The general rationale for scoring the technical categories is provided below:

- Storage: Ability to store 5,000 ac-ft.
- Supply Conveyance: Need, size, and length for a supply conveyance canal and/or pipeline.
- Water Delivery: Need, size, and length for a delivery conveyance canal and or pipeline.
- Geotechnical Feasibility: Technical feasibility of constructing the alternative, considering the site geological and geotechnical characteristics.
- Downstream Risk: Possible impact on risk to the downstream public.
- Recreation: Impact on recreation.
- Land Ownership: Willingness of land owner to participate.

The general rational for scoring the cultural and ability to permit categories is provided below:

- Location within Wilderness Areas: Is the project within wilderness areas and if so, it was considered a fatal flaw.
- Cultural or Archaeological Resources: Impact on identified cultural and archaeological resources.
- Ability to Permit: Average of cultural resources and environmental category scores.

The general rational for scoring the environmental categories is provided below:

- Wetlands Impacts: Scores were assigned based on the acres of disturbed wetlands.
- Sensitive Species: A sensitive species screening analysis was completed by evaluating project locations with respect to known ranges of federally listed endangered or threatened species, Bureau of Land Management sensitive species, U.S. Forest Service sensitive species, or Wyoming Tier 1 sensitive species.
- Sage Grouse: Alternatives within a sage grouse core area were assigned a score of 1 and alternatives outside of a core area were assigned a score of 10.
- Big Game Impacts: Scores were calculated for each species habitat type and overall project ranks were calculated as 10 minus the sum of the individual scores. Alternatives with lower scores have the potential to have more big game resources, thus they would likely have more detrimental impacts than sites with fewer big game resources.
- Fish Impacts: Scores were based on a combination of three factors: 1) Wyoming Game and Fish Department (WGFD) preliminary assessment of fisheries impacts, 2) streamflow class, and 3) stream habitat loss. Scores assigned to each are averaged for a total fisheries score.

A summary of the scoring matrix is provided in Appendix A.

Ranking Evaluation

Desktop Ranking of Alternatives

Total scores were calculated for each alternative by summing the scores for each category, and alternatives were ranked based on the total scores. Alternatives were then evaluated for additional considerations or fatal flaws such as if the project is located within a wilderness area, if the land owner is unwilling, if there are severe fisheries or big game issues at the site, or if site access is difficult and significant road building would be required. Alternatives with fatal flaws or that were within wilderness areas were removed from consideration. The resulting top ten ranked alternatives from the desktop study were:

1. New Fork Lake – Lower Inlet
2. New Fork Lake – Raise Dam and Lower Inlet
3. Willow Lake – Lower Inlet
4. Willow Lake – Lower Inlet and New Fork Lower Inlet
5. New Fork Lake – Raise Dam
6. Fremont Lake Enlargement
7. East Fork Gorge

8. Site 9
9. New Fork Off Channel
10. Site 7

Alternatives associated with New Fork Lake Dam Enlargement, Level II, Phase I Study, as shown on Figure 1, have been previously evaluated and are being advanced and therefore, were disregarded from further evaluation for this Level I study.

Site Visits

Site visits were conducted for four of the alternatives (Site 9, Fremont Lake Enlargement, Site 2, and East Fork Gorge) on June 13, 2017.

Of the four sites which were visited, one site, Fremont Lake, had been recently enlarged and additional modifications would likely impact existing facilities. This site was eliminated from the list of alternatives.

Additionally, two sites (Site 2 and East Fork Gorge) exhibited potential fatal flaws but remained on the “considered” list because of the uncertainty of the impact the flaws would have on permitting and design. At Site 2, immediately west of the dam is a winter elk feeding ground as shown on Photograph 1 in Appendix D. It appears the dam would block some access and the resting areas for the elk. Project opposition would likely be from local ranchers, the hunting community, and the WGFD. East Fork Gorge would likely have property issues due to adjacent owners and would likely have significant foundation seepage issues because the left abutment of the dam would be a narrow glacial moraine.

Final Ranking of Alternatives

After incorporating information gathered during the site visits and adjusting scores where needed, rankings were re-evaluated and the final top 10 alternatives were:

1. New Fork Lake – Lower Inlet
2. New Fork Lake – Raise Dam and Lower Inlet
3. Willow Lake – Lower Inlet
4. Willow Lake – Lower Inlet and New Fork – Lower Inlet
5. New Fork Lake – Raise Dam
6. East Fork Gorge
7. Site 9
8. New Fork Off Channel
9. Site 7
10. Willow Creek

From the above list, the following three alternatives were selected for further evaluation, discussion of which is provided in the Concept Memorandum (RJH, 2017a).

1. Willow Lake – Lower Inlet
2. Site 9
3. Site 7

References

RJH Consultants, Inc. (RJH, 2017a). *New Fork River Level I Watershed Study: Concept Memorandum*, July.

RJH Consultants, Inc. (RJH, 2017b). *Feasibility Study Report, New Fork Lake Dam Enlargement, Level II, Phase I Study*, April.

Attachments: Figure 1
Attachment A – Scoring Matrix Summary and Rationale
Attachment B – Summary of Alternative Reservoir Sites
Attachment C – Tetra Tech Scoring Rationale
Attachment D - Photograph

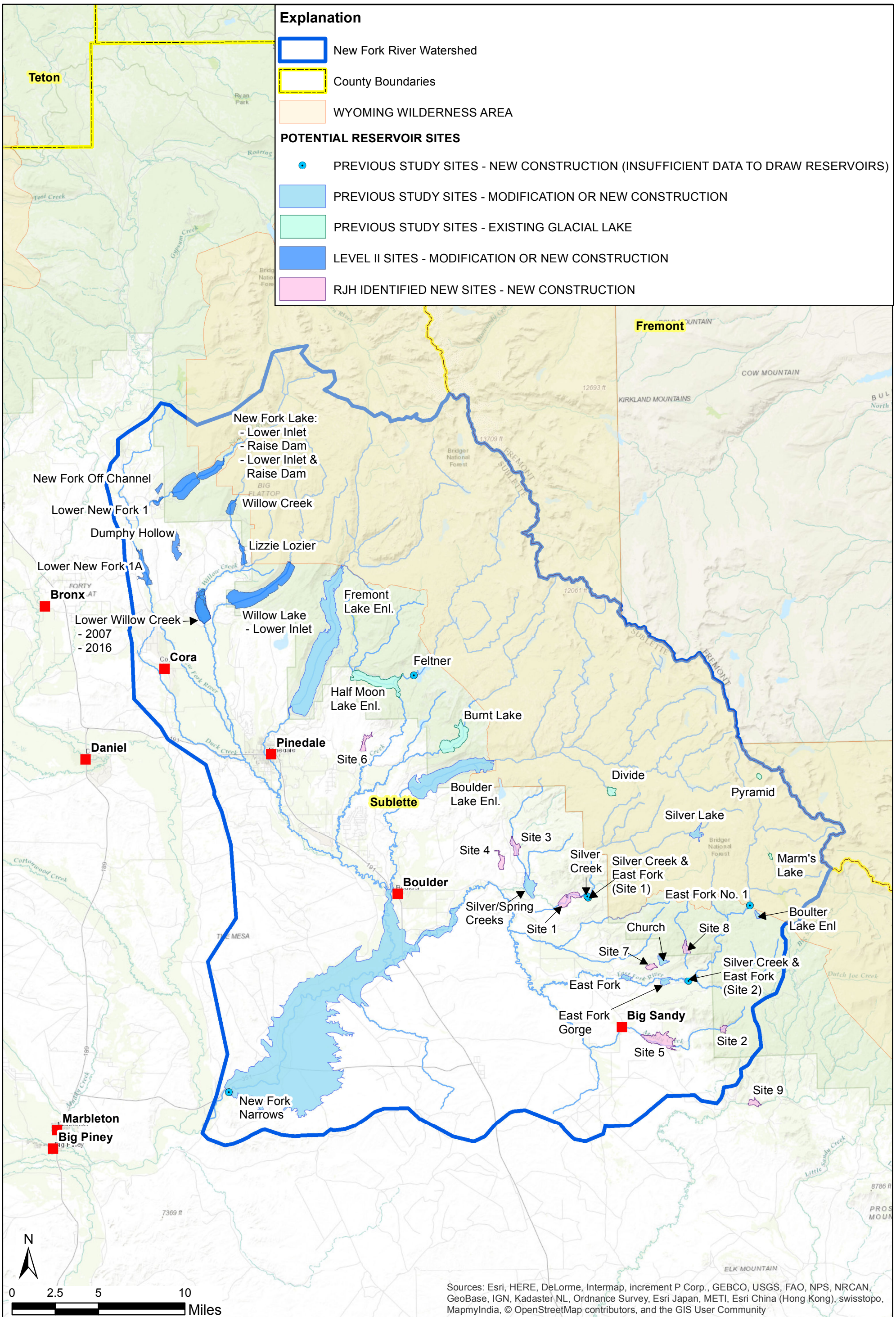

P:\16123 - New Fork Level 1\Engineering\1003G_Water Storage and Flood Control Needs\GIS\Figures\For Team Members\16123-1003G_Potential Reservoir Sites - NAD 83 UTM 12.mxd

THIS DOCUMENT MUST BE REPRODUCED IN COLOR

Projection: NAD 83 - UTM 12N

RJH CONSULTANTS, INC.

NEW FORK RIVER LEVEL 1 WATERSHED STUDY

POTENTIAL RESERVOIR SITES

PROJECT NUMBER 16123

July 2017

Figure 1

ATTACHMENT A

SCORING MATRIX SUMMARY AND RATIONALE

New Fork River Watershed Level I Study

Scoring Matrix Summary

Rank of Considered Sites	Alternative	Wilderness Area	Storage (acre-ft)	Water Delivery	Supply Conveyance	Geotechnical Feasibility	Downstream Risk	Recreation	Land Ownership	Cultural or Archaeological	Wetlands Impacts	Sensitive Species	Sage Grouse	Big Game Impacts	Fish Impacts	Ability to Permit	Cost Estimate	Date of Cost Estimate	$ Cost in 2017 @ 3%/Annum Inflation	2017 $ Cost/Acre Ft	Other Considerations	Total Points	Rank	Percent of Highest Ranked Alternative
			15	15	15	15	20	20	15	15	15	15	15	15	15	10	-	-	2017	-				
1	New Fork Lake - Lower Inlet	NO	150.0	150.0	150.0	45.0	180.0	140.0	120.0	150.0	150.0	75.0	150.0	105.0	90.0	120.0	$ 12,700,000	2016	$ 13,081,000	$ 1,391.60	-	1775	1	100%
2	New Fork Lake - Raise Dam and Lower Inlet	NO	150.0	150.0	150.0	45.0	160.0	150.0	120.0	150.0	150.0	75.0	150.0	105.0	90.0	120.0	$ 14,100,000	2016	$ 14,523,000	$ 1,545.00	-	1765	2	99%
N/A	East Fork No.1	YES	142.0	150.0	150.0	135.0	80.0	140.0	15.0	150.0	150.0	75.0	150.0	150.0	65.0	123.3	$ 80,000	1938	$ 826,477	$ 174.58	-	1675	3	94%
3	Willow Lake - Lower Inlet	NO	108.0	150.0	150.0	45.0	180.0	80.0	120.0	150.0	150.0	75.0	150.0	60.0	70.0	109.2	-	-	-	-	-	1597	4	90%
4	Willow Lake - Lower Inlet and New Fork - Lower Inlet	NO	108.0	150.0	150.0	45.0	180.0	80.0	120.0	150.0	150.0	75.0	150.0	60.0	45.0	105.0	-	-	-	-	-	1568	6	88%
N/A	Feltner	NO	38.4	150.0	150.0	135.0	80.0	120.0	75.0	150.0	150.0	75.0	150.0	127.5	65.0	119.6	$ 700	1937	$ 7,449	$ 5.82	Difficult access with significant road building required	1585	5	89%
N/A	Half Moon Lake Enlargement	NO	150.0	150.0	150.0	105.0	80.0	140.0	15.0	150.0	150.0	75.0	150.0	127.5	0.0	108.8	$ 1,275,000	1977	$ 4,159,098	$ 282.93	Severe Fisheries Issues	1551	7	87%
N/A	Marm's Lake	YES	16.9	150.0	150.0	120.0	120.0	60.0	15.0	150.0	150.0	75.0	150.0	150.0	70.0	124.2	$ 4,000	1938	$ 41,324	$ 73.53	Severe Fisheries Issues	1501	8	85%
N/A	Silver Creek	NO	150.0	150.0	150.0	75.0	80.0	140.0	15.0	150.0	150.0	75.0	150.0	60.0	45.0	105.0	$ 8,400,000	1977	$ 27,401,117	$ 4,566.85	Unwilling owner	1495	9	84%
N/A	Pyramid	YES	19.1	150.0	120.0	135.0	80.0	80.0	15.0	150.0	150.0	75.0	150.0	150.0	90.0	127.5	$ 3,000	1938	$ 30,993	$ 48.58	-	1492	10	84%
N/A	Silver Creek - East Fork (2 Sites)	NO	150.0	150.0	150.0	45.0	80.0	160.0	15.0	150.0	150.0	75.0	150.0	60.0	45.0	105.0	$ 21,000,000	1977	$ 68,502,794	$ 6,009.02	Unwilling owner	1485	11	84%
5	New Fork Lake - Raise Dam	NO	150.0	150.0	150.0	45.0	140.0	160.0	120.0	15.0	45.0	75.0	150.0	105.0	90.0	80.0	$ 25,400,000	2016	$ 26,162,000	$ 2,783.19	-	1475	12	83%
N/A	Burnt Lake	NO	47.3	150.0	150.0	45.0	180.0	60.0	75.0	150.0	150.0	75.0	150.0	127.5	0.0	108.8	$ 344,998	1999	$ 587,335	$ 372.67	Severe Fisheries Issues	1469	13	83%
N/A	Site 8	NO	150.0	150.0	120.0	105.0	80.0	120.0	45.0	150.0	45.0	75.0	150.0	105.0	45.0	95.0	-	-	-	-	Difficult access with significant road building required	1435	14	81%
N/A	Fremont Lake Enlargement	NO	150.0	150.0	150.0	15.0	140.0	100.0	75.0	15.0	150.0	75.0	150.0	60.0	70.0	86.7	$ 138,000	1980	$ 411,961	$ 76.36	Enlargement not likely due to exising infrastructure	1387	15	78%
N/A	Divide	YES	30.8	150.0	150.0	105.0	80.0	100.0	15.0	15.0	150.0	75.0	150.0	150.0	90.0	105.0	$ 1,200	1938	$ 12,397	$ 12.07	-	1366	16	77%
6	East Fork Gorge	NO	57.0	150.0	150.0	15.0	80.0	120.0	75.0	150.0	150.0	75.0	150.0	15.0	65.0	100.8	$ 21,000,000	2001	$ 33,698,835	$ 17,736.23	-	1353	17	76%
7	Site 9	NO	150.0	105.0	150.0	135.0	80.0	120.0	120.0	150.0	90.0	75.0	15.0	15.0	75.0	70.0	-	-	-	-	-	1350	18	76%
8	New Fork Off Channel	NO	90.1	105.0	15.0	45.0	80.0	120.0	120.0	150.0	45.0	75.0	150.0	105.0	130.0	109.2	-	-		$ -	-	1339	19	75%
9	Site 7	NO	150.0	120.0	90.0	45.0	80.0	140.0	75.0	150.0	45.0	75.0	150.0	15.0	85.0	86.7	-	-	-	-	-	1307	20	74%
10	Willow Creek	NO	150.0	150.0	60.0	90.0	80.0	160.0	45.0	15.0	45.0	150.0	150.0	82.5	45.0	81.3	-	-	-	-	-	1304	21	73%
N/A	Silver Lake	YES	64.6	150.0	150.0	135.0	80.0	80.0	15.0	15.0	45.0	75.0	150.0	150.0	90.0	87.5	-		-	-	-	1287	22	73%
11	Church	NO	127.5	120.0	75.0	60.0	80.0	140.0	120.0	150.0	15.0	75.0	150.0	7.5	85.0	80.4	$ 7,500,000	2002	$ 11,684,756	$ 2,749.35	-	1285	23	72%
12	Site 2	NO	150.0	150.0	90.0	60.0	60.0	140.0	75.0	150.0	45.0	75.0	150.0	15.0	45.0	80.0	-	-	-	-	Likely flaw due to elk feeding area	1285	24	72%
13	Boulter Lake Enlargement	NO	14.8	150.0	150.0	90.0	160.0	80.0	75.0	15.0	45.0	30.0	150.0	150.0	90.0	80.0	$ 745,064	2007	$ 1,001,303	$ 2,026.93	-	1280	25	72%
14	Lower New Fork 1	NO	19.9	150.0	150.0	45.0	80.0	120.0	45.0	150.0	45.0	75.0	150.0	82.5	35.0	89.6	-	-	-	-	-	1237	26	70%
N/A	Silver/Spring Creeks	NO	150.0	150.0	150.0	0.0	80.0	160.0	15.0	150.0	150.0	75.0	15.0	15.0	35.0	73.3	$ 35,250,000	2001	$ 56,565,902	$ 5,656.59	Unwilling owner	1218	27	69%
15	Lower New Fork 1A	NO	150.0	150.0	150.0	45.0	80.0	160.0	15.0	150.0	15.0	75.0	15.0	82.5	25.0	60.4	-	-	-	-	-	1173	28	66%
16	Dumphy Hollow	NO	150.0	150.0	60.0	90.0	80.0	160.0	45.0	150.0	15.0	75.0	15.0	82.5	35.0	62.1	-	-	$ -	$ -	-	1170	29	66%
17	Lizzie Lozier	NO	150.0	150.0	90.0	45.0	80.0	160.0	15.0	150.0	45.0	75.0	15.0	82.5	35.0	67.1	-	-	-	-	-	1160	30	65%
18	Lower Willow Creek (2007)	NO	150.0	150.0	150.0	15.0	60.0	160.0	15.0	150.0	15.0	75.0	15.0	82.5	35.0	62.1	$ 45,088,648	2007	$ 60,595,373	$ 2,613.00	-	1135	31	64%
18	Lower Willow Creek (2016)	NO	150.0	150.0	150.0	15.0	60.0	160.0	15.0	150.0	15.0	75.0	15.0	82.5	35.0	62.1	-	-	-	-	-	1135	31	64%
20	Site 5	NO	150.0	150.0	75.0	60.0	80.0	140.0	15.0	150.0	15.0	75.0	15.0	105.0	35.0	65.8	-	-	-	-	-	1131	33	64%
21	Site 4	NO	150.0	120.0	45.0	45.0	80.0	140.0	75.0	150.0	45.0	75.0	15.0	37.5	75.0	66.3	-	-	-	-	-	1119	34	63%
22	East Fork	NO	51.0	150.0	150.0	30.0	80.0	120.0	75.0	150.0	45.0	75.0	15.0	15.0	65.0	60.8	$ 13,000,000	2001	$ 20,861,184	$ 12,271.28	-	1082	35	61%
23	Site 3	NO	150.0	150.0	150.0	30.0	80.0	140.0	15.0	150.0	15.0	75.0	15.0	15.0	35.0	50.8	-	-	-	-	-	1071	36	60%
24	Site 6	NO	150.0	120.0	45.0	45.0	80.0	140.0	15.0	150.0	45.0	75.0	15.0	37.5	75.0	66.3	-	-	-	-	-	1059	37	60%
25	Boulder Lake Enlargement	NO	150.0	150.0	150.0	45.0	60.0	140.0	15.0	15.0	15.0	75.0	15.0	37.5	90.0	41.3	$ 45,100,000	2001	$ 72,372,260	$ 1,809.31	-	999	38	56%
26	Site 1	NO	150.0	150.0	150.0	45.0	80.0	140.0	15.0	15.0	15.0	75.0	15.0	15.0	55.0	31.7	-	-	-	-	-	952	39	54%
27	New Fork Narrow	NO	150.0	15.0	150.0	30.0	60.0	120.0	15.0	15.0	15.0	15.0	15.0	60.0	0.0	20.0	$ 8,000,000	1970	$ 32,095,160	$ 178.31	-	680	40	38%

Storage

Weight 15

Rationale Very Important and somewhat unique. Could also affect cost.

Site	Storage from Summary Table [ac-ft]	Storage [ac-ft]	Score	Rationale
Boulder Lake Enlargement	40,000[1]	40,000	10	Minimum storage required is 5,000 acre-feet, which is a rating of 10, sites rated by linear interpolation of storage less than 5,000 acre-feet.
Boulter Lake Enlargement	494[2]	494	1	
Burnt Lake	1576	1576	3	
Church	4,250[3]	4,250	9	
Divide	1027	1027	2	
Dumphy Hollow	9400	9400	10	
East Fork	1700	1700	3	
East Fork Gorge	1900	1900	4	
East Fork No.1	4734	4734	9	
Feltner	1280	1280	3	
Fremont Lake Enlargement	5395	5395	10	
Half Moon Lake Enlargement	14,700[4]	14,700	10	
Lizzie Lozier	9400	9400	10	
Lower New Fork 1	662	662	1	
Lower New Fork 1A	9400	9400	10	
Lower Willow Creek (2007)	23190	23190	10	
Lower Willow Creek (2016)	9400	9400	10	
Marm's Lake	562	562	1	
New Fork Lake - Lower Inlet	9400	9400	10	
New Fork Lake - Raise Dam	9400	9400	10	
New Fork Lake - Raise Dam and Lower Inlet	9400	9400	10	
New Fork Narrow	180,000[5]	180,000	10	
New Fork Off Channel	3002	3002	6	
Pyramid	638	638	1	
Silver Lake	2152	2152	4	
Silver Creek	6,000[4]	6,000	10	
Silver Creek - East Fork (2 Sites)	8,000 and 3,400	11400	10	
Silver/Spring Creeks	10,000[1]	10,000	10	
Willow Creek	9400	9400	10	
Willow Lake - Lower Inlet	3600	3600	7	
Willow Lake - Lower Inlet and New Fork - Lower Inlet	3600	3600	7	
Site 1	5000	5000	10	
Site 2	5000	5000	10	
Site 3	5000	5000	10	
Site 4	5000	5000	10	
Site 5	5000	5000	10	
Site 6	5000	5000	10	
Site 7	5000	5000	10	
Site 8	5000	5000	10	
Site 9	5000	5000	10	

Notes:

1. Value reported as 85% firm yield.
2. Value reported as 80% firm yield.
3. Value reported as 90% firm yield.
4. Yield percentage was not reported.
5. Value reported as active storage.

Water Delivery

Weight 15

Rationale Very Important. Also affects cost, land ownership, cultural resources, wetlands, sage, big game and ability to permit

Site	Score	Rationale
Boulder Lake Enlargement	10	Onstream
Boulter Lake Enlargement	10	Onstream
Burnt Lake	10	Onstream
Church	8	Onstream - Some downstream improvements possibly needed
Divide	10	Onstream
Dumphy Hollow	10	Onstream
East Fork	10	Onstream
East Fork Gorge	10	Onstream
East Fork No.1	10	Onstream
Feltner	10	Onstream
Fremont Lake Enlargement	10	Onstream
Half Moon Lake Enlargement	10	Onstream
Lizzie Lozier	10	Onstream
Lower New Fork 1	10	Onstream
Lower New Fork 1A	10	Onstream
Lower Willow Creek (2007)	10	Onstream
Lower Willow Creek (2016)	10	Onstream
Marm's Lake	10	Onstream
New Fork Lake - Lower Inlet	10	Onstream
New Fork Lake - Raise Dam	10	Onstream
New Fork Lake - Raise Dam and Lower Inlet	10	Onstream
New Fork Narrow	1	Offstream - Requires pumping and long pipeline
New Fork Off Channel	7	Offstream - Requires short canal
Pyramid	10	Onstream
Silver Lake	10	Onstream
Silver Creek	10	Onstream
Silver Creek - East Fork (2 Sites)	10	Onstream
Silver/Spring Creeks	10	Onstream
Willow Creek	10	Onstream
Willow Lake - Lower Inlet	10	Onstream
Willow Lake - Lower Inlet and New Fork - Lower Inlet	10	Onstream
Site 1	10	Onstream
Site 2	10	Onstream
Site 3	10	Onstream
Site 4	8	Onstream - Some downstream improvements possibly needed
Site 5	10	Onstream
Site 6	8	Onstream - Some downstream improvements possibly needed
Site 7	8	Onstream - Some downstream improvements possibly needed
Site 8	10	Onstream
Site 9	7	Offstream - Existing canal alignment permitted, needs piping in areas and rehab

Supply Conveyance

Weight 15

Rationale Very Important. Also affects cost, land ownership, cultural resources, wetlands, sage, big game and ability to permit

Site	Score	Rationale
Boulder Lake Enlargement	10	Onstream
Boulter Lake Enlargement	10	Onstream
Burnt Lake	10	Onstream
Church	5	Fill by gravity from Jim Creek, needs 4,600 ft Canal
Divide	10	Onstream
Dumphy Hollow	4	Fill by gravity from New Fork Lake, needs Long Canal
East Fork	10	Onstream
East Fork Gorge	10	Onstream
East Fork No.1	10	Onstream
Feltner	10	Onstream
Fremont Lake Enlargement	10	Onstream
Half Moon Lake Enlargement	10	Onstream
Lizzie Lozier	6	80% Onstream, short canal needed for additional 20%
Lower New Fork 1	10	Onstream
Lower New Fork 1A	10	Onstream
Lower Willow Creek (2007)	10	Onstream
Lower Willow Creek (2016)	10	Onstream
Marm's Lake	10	Onstream
New Fork Lake - Lower Inlet	10	Onstream
New Fork Lake - Raise Dam	10	Onstream
New Fork Lake - Raise Dam and Lower Inlet	10	Onstream
New Fork Narrow	10	Onstream
New Fork Off Channel	1	Fill by pumping
Pyramid	8	Onstream, very high in the drainage and supply may be limited
Silver Lake	10	Onstream
Silver Creek	10	Onstream
Silver Creek - East Fork (2 Sites)	10	Onstream
Silver/Spring Creeks	10	Onstream
Willow Creek	4	80% Onstream, long canal needed for additional 20%
Willow Lake - Lower Inlet	10	Onstream
Willow Lake - Lower Inlet and New Fork - Lower Inlet	10	Onstream
Site 1	10	Onstream
Site 2	6	60% Onstream, long canal needed for additional 40%
Site 3	10	Onstream
Site 4	3	Offstream 7,000 ft canal from Spring Creek upstream of res (40% of supply) Pumping or excavated 5,000 ft canal from confluence of spring creek and Scab Creek
Site 5	5	60% Onstream, long canal needed for additional 40%
Site 6	3	Fill by gravity from Pole Creek, 4.5 mile canal and may need to cut through small ridges to make canal work
Site 7	6	Fill by gravity from Jim Creek, ~ 1 mile canal, Jim Cr may not have sufficient supply, Could get an additional 40% from Pocket Creek with longer canal
Site 8	8	Onstream, supply may be limited
Site 9	10	Onstream

Geotechnical Feasibility

Weight 15

Rationale Very Important and somewhat unique. Could also affects cost.

Site	Score	Rationale
Boulder Lake Enlargement	3	Existing dam on glacial deposits and alluvium overlying the Fontenelle Tongue Member of the Green River Formation, Potential for seepage losses. Existing landslide present on the North Reservoir Rim.
Boulter Lake Enlargement	6	Existing Dam and Reservoir on Glacial Deposits on the West Side and Competent, Massive Granodiorite on the East Side, Potential for Seepage Losses on the West Side. Downstream of the Dam along Boulter Creek, contact between Massive Granodiorite (East Side) and a Fractured and Jointed Fine Grained Rock with Mineralization between Fractures and Joints (West Side) is present along the creek and likely extends upstream through the dam and lake. Contact likely associated with Shear Zone present just West of the Dam. No Visible Slope Instability. Minimal Observed Existing Seepage. Narrow Left Abutment with Glacial Materials (Potential Seepage).
Burnt Lake	3	Existing lake outlet on Primarily Glacial Deposits (unknown thickness) with Igneous Intrusive Rock from the Louis Lake Batholith near the Northeast (Upstream) Lake Rim, Potential for Seepage Losses through Glacial Deposits Appearance of Hummocky Terrain on the Southern and Southeastern Valley Slopes, Potential Historical Slope Instability.
Church	4	Granite within 5 feet of ground surface on right abutment and right side of valley bottom. Glacial deposits greater than 14 feet thick (limit of investigation) on left abutment and left side of valley bottom. Potential for High Seepage Losses within the Left Abutment. No Visible Slope Instability.
Divide	7	Existing Lake on Glaciated Igneous Intrusive Rock from the Louis Lake Batholith overlain by Grus and Glacial Deposits. No Visible Slope Instability. Mapped fault running along the Eastern Rim of the Lake.
Dumphy Hollow	6	Wasatch Formation bedrock, Likely Glacial Deposits in the Valley Bottom (Potential Seepage). no Visible Slope Instability.
East Fork	2	Dam and Reservoir founded on Glacial Deposits, Alluvium, and Colluvium of unknown depth overlying the Fontenelle Tongue Member of the Green River Formation; depth to bedrock may be too great to found the Dam on bedrock. Potential for High Seepage Losses. No Visible Slope Instability.
East Fork Gorge	1	Dam and Reservoir Founded on Glacial Deposits, Alluvium, and Colluvium of unknown depth overlying the Fontenelle Tongue Member of the Green River Formation; depth to bedrock may be too great to found the Dam on bedrock. Potential for High Seepage Losses. No Visible Slope Instability. Narrow Left Abutment, Could be glacial
East Fork No.1	9	Dam and Reservoir foundation mapped as igneous intrusive Rock from the Louis Lake Batholith and Bears Ears Pluton. Likely relatively thin alluvium and glacial deposits in valley bottom No Visible Slope Instability.
Feltner	9	Dam and Reservoir Founded on Glaciated Magmatic Gneiss and Igneous Intrusive Rock from the Louis Lake Batholith overlain by likely relatively thin Grus and Glacial Deposits. No Visible Slope Instability.

Site	Score	Rationale
Fremont Lake Enlargement	1	Dam foundation on glacial moraine. foundation will not extend to bedrock. Two Existing Landslides are present on the Northeastern Reservoir Rim, one large and one small. Existing Regional Thrust Fault trending Northwest to Southeast through the center of the Reservoir. Potential for Seepage Losses.
Half Moon Lake Enlargement	7	Existing lake primarily on Glacial Deposits except the eastern extent of the reservoir is on igneous intrusive rock of the Louis Lake Batholith and nearly free of Glacial Deposits. The dam would be founded on bedrock with relatively thin glacial deposits expected. Three Existing Landslides are Present along the Northwestern, Southern, and Northeastern Reservoir Rim, the largest of which is located along the Northwestern Rim. Regional Thrust Fault located just west of the Reservoir.
Lizzie Lozier	3	Wasatch Formation bedrock in abutments and below an unknown thickness of glacial deposits in the Valley Bottom (Potential Seepage). no visible slope instability.
Lower New Fork 1	3	Wasatch Formation Bedrock overlain by Glacial Deposits and alluvium of unknown thickness, narrow right abutment consisting of glacial material (Potential Seepage). no Visible Slope Instability.
Lower New Fork 1A	3	Wasatch Formation Bedrock is overlain by Alluvium of unknown thickness, No Visible Slope Instability.
Lower Willow Creek (2007)	1	Right abutment: Wasatch Fm, narrow; Left abutment: glacial deposits of unknown thickness; Valley Bottom: alluvium of unknown thickness (Significant Seepage Potential) Existing landslide on the West Side.
Lower Willow Creek (2016)	1	Right abutment: Wasatch Fm, narrow; Left abutment: glacial deposits of unknown thickness; Valley Bottom: alluvium of unknown thickness (Significant Seepage Potential) Existing landslide on the West Side.
Marm's Lake	8	Existing Lake on Glaciated Igneous Intrusive Rock overlain by Glacial Deposits and Grus. No Visible Slope Instability. Mapped faults running West to East and North to South in vicinity of the proposed embankment.
New Fork Lake - Lower Unlet	3	Existing Dam on Glacial Deposits. Landslides present along Reservoir Rim, Largest of which is located on the Northeastern Rim. Minimal Observed Seepage with No Change in Head
New Fork Lake - Raise Dam	3	Existing Dam on Glacial Deposits. Landslides present along Reservoir Rim, Largest of which is located on the Northeastern Rim. Minimal Observed Seepage with 7' Increase in Head
New Fork Lake - Raise Dam and Lower Inlet	3	Existing Dam on Glacial Deposits. Landslides present along Reservoir Rim, Largest of which is located on the Northeastern Rim. Minimal Observed Seepage with 4' Increase in Head

Site	Score	Rationale
New Fork Narrow	2	Dam and Reservoir Founded on Alluvium, Residuum, and Slopewash Deposits overlying Sedimentary Rocks of the Wasatch and Green River Formations. Considerable Slumpage identified at the South Abutment, Potential Slope Instability.
New Fork Off Channel	3	Dam and reservoir founded on glacial moraine of unknown thickness, Potential for High Seepage Losses. No Visible Slope Instability.
Pyramid	9	Existing Lake on Glaciated Igneous Intrusive Rock overlain by Glacial Deposits and Grus. Likely Glacial Deposits in the Valley Bottom (Potential Seepage). No Visible Slope Instability.
Silver Lake	9	Existing Dam and Reservoir on Glacial Deposits overlying Igneous Intrusive Rock. No Visible Slope Instability.
Silver Creek	5	Right abutment igneous intrusive bedrock; valley bottom alluvium and glacial deposits of unknown thickness overlying igneous intrusive bedrock; left abutment glacial moraine, potential for Seepage Losses. No Visible Slope Instability.
Silver Creek - East Fork (2 Sites)	3	Silver Creek Site: Right abutment igneous intrusive bedrock; valley bottom alluvium and glacial deposits of unknown thickness overlying igneous intrusive bedrock; left abutment glacial moraine, potential for Seepage Losses. No Visible Slope Instability.
		East Fork River Site: Dam and reservoir founded on glacial deposits of unknown thickness overlying likely igneous intrusive bedrock of the Bears Ears pluton. Bedrock likely too deep to be used as foundation, potential for seepage losses No Visible Slope Instability.
Silver/Spring Creeks	6	Valley bottom and left abutment founded on alluvium and terrace deposits and possibly glacial deposits of unknown thickness overlying igneous intrusive rocks of the Bears Ears Pluton. Igneous rock in right abutment No visible Slope Instability. Narrow right abutment, left abutment terrace deposits
Willow Creek	3	Glacial deposits of unknown thickness overlying the Wasatch Formation on right side of the valley and likely the Bacon Ridge Sandstone and Sohare Formation on the left side of valley, both contain coal. Appearance of Hummocky Terrain on Valley Slopes, Potential Historical Slope Instability.
Willow Lake - Lower Inlet	3	Existing Dam on thick Glacial Deposits. Minimal Observed Existing Seepage with No Change in Head
Willow Lake - Lower Inlet and New Fork - Lower Inlet	3	Existing Dam on thick Glacial Deposits. Minimal Observed Existing Seepage with No Change in Head
Site 1	3	Dam and reservoir are founded on glacial deposits and alluvium of unknown thickness overlying Bedrock which is likely Igneous Intrusive Rock, Potential for Seepage Losses. No Visible Slope Instability.

Site	Score	Rationale
Site 2	4	Dam and reservoir founded on igneous intrusive rock of the Bears Ears pluton. Likely thin glacial deposits and/or alluvium in the valley bottom (Potential Seepage). Based on site visit likely thick glacial deposits, maybe rock fill dam low perm core No Visible Slope Instability. Fault mapped at upstream extent of reservoir
Site 3	2	Dam and reservoir founded on alluvium, colluvium and terrace deposits of unknown thickness overlying Bedrock which is likely the Wasatch Formation, Potential for High Seepage Losses. No Visible Slope Instability.
Site 4	3	Dam and reservoir founded on alluvium, colluvium and terrace deposits of unknown thickness overlying the Wasatch Formation, Potential for High Seepage Losses. No Visible Slope Instability.
Site 5	4	Dam and Reservoir Founded on alluvium and glacial deposits of unknown thickness overlying the Wasatch Formation which is exposed above the left abutment, Potential for High Seepage Losses. No Visible Slope Instability.
Site 6	3	Dam and reservoir founded on terrace and glacial deposits of unknown thicknesses overlying bedrock which is likely the Wasatch Formation, Potential for High Seepage Losses. No Visible Slope Instability.
Site 7	3	Dam and Reservoir Founded on alluvium and glacial deposits of unknown thickness overlying Bedrock which is likely Igneous Intrusive Rock, Potential for Seepage Losses. No Visible Slope Instability.
Site 8	7	Dam and reservoir founded on glacial deposits overlying Igneous Intrusive Rock from the Bears Ears Pluton, Potential for Seepage Losses. Appearance of Hummocky Terrain on western Valley Slopes, Potential Historical Slope Instability.
Site 9	9	Dam founded on Igneous Intrusive Rock of the Bears Ears pluton. Reservoir located on alluvium and glacial deposits of unknown thickness. Potential for Seepage Losses. Per landowner, bedrock is shallow below river No Visible Slope Instability. Fault mapped through reservoir

Downstream Risk

Weight 20

Rationale Unique & Important

Site	Score	Rationale
Boulder Lake Enlargement	3	Reduces Downstream Risk = 6 to 10; No change in Downstream Risk = 5; Increases Downstream Risk = 0 to 4
Boulter Lake Enlargement	8	
Burnt Lake	9	
Church	4	
Divide	4	
Dumphy Hollow	4	
East Fork	4	
East Fork Gorge	4	
East Fork No.1	4	
Feltner	4	
Fremont Lake Enlargement	7	
Half Moon Lake Enlargement	4	
Lizzie Lozier	4	
Lower New Fork 1	4	
Lower New Fork 1A	4	
Lower Willow Creek (2007)	3	
Lower Willow Creek (2016)	3	
Marm's Lake	6	
New Fork Lake - Lower Inlet	9	
New Fork Lake - Raise Dam	7	
New Fork Lake - Raise Dam and Lower Inlet	8	
New Fork Narrow	3	
New Fork Off Channel	4	
Pyramid	4	
Silver Lake	4	
Silver Creek	4	
Silver Creek - East Fork (2 Sites)	4	
Silver/Spring Creeks	4	
Willow Creek	4	
Willow Lake - Lower Inlet	9	
Willow Lake - Lower Inlet and New Fork - Lower Inlet	9	
Site 1	4	
Site 2	3	
Site 3	4	
Site 4	4	
Site 5	4	
Site 6	4	
Site 7	4	
Site 8	4	
Site 9	4	

Recreation

Weight 20

Rationale Important and Unique.

Site	Score	Rationale
Boulder Lake Enlargement	7	Improves late season fishing, large increase in reservoir area
Boulter Lake Enlargement	4	Minimal improvement in late season fishing, small increase in reservoir area
Burnt Lake	3	Minimal improvement in late season fishing, no increase in reservoir area
Church	7	Improves late season fishing, new reservoir
Divide	5	Improves late season fishing, increase in reservoir area
Dumphy Hollow	8	Improves late season fishing, new reservoir
East Fork	6	Minimal improvement in late season fishing, new reservoir
East Fork Gorge	6	Minimal improvement in late season fishing, new reservoir
East Fork No.1	7	Improves late season fishing, new reservoir
Feltner	6	Minimal improvement in late season fishing, new reservoir
Fremont Lake Enlargement	5	Improves late season fishing, small increase in reservoir area
Half Moon Lake Enlargement	7	Improves late season fishing, increase in reservoir area
Lizzie Lozier	8	Improves late season fishing, new reservoir
Lower New Fork 1	6	Minimal improvement in late season fishing, new reservoir
Lower New Fork 1A	8	Improves late season fishing, new reservoir
Lower Willow Creek (2007)	8	Improves late season fishing, new reservoir
Lower Willow Creek (2016)	8	Improves late season fishing, new reservoir
Marm's Lake	3	Minimal improvement in late season fishing, reservoir change unknown
New Fork Lake - Lower Inlet	7	Improves late season fishing, small decrease in reservoir area
New Fork Lake - Raise Dam	8	Improves late season fishing, small increase in reservoir area
New Fork Lake - Raise Dam and Lower Inlet	7.5	Improves late season fishing, small increase in reservoir area
New Fork Narrow	6	Improves late season fishing on the Green River. Irrigation return flows may improve late season fishing on the New Fork River, new large reservoi
New Fork Off Channel	6	Minimal improvement in late season fishing, new reservoir
Pyramid	4	Minimal improvement in late season fishing, reservoir change unknown
Silver Lake	4	Minimal improvement in late season fishing, reservoir change unknown
Silver Creek	7	Improves late season fishing, new reservoir
Silver Creek - East Fork (2 Sites)	8	Improves late season fishing, new reservoir
Silver/Spring Creeks	8	Improves late season fishing, new reservoir
Willow Creek	8	Improves late season fishing, new reservoir
Willow Lake - Lower Inlet	4	Improves late season fishing, small decrease in reservoir area
Willow Lake - Lower Inlet and New Fork - Lower Inlet	4	Improves late season fishing, small decrease in reservoir area
Site 1	7	Improves late season fishing, new reservoir
Site 2	7	Improves late season fishing, new reservoir
Site 3	7	Improves late season fishing, new reservoir
Site 4	7	Improves late season fishing, new reservoir
Site 5	7	Improves late season fishing, new reservoir
Site 6	7	Improves late season fishing, new reservoir
Site 7	7	Improves late season fishing, new reservoir
Site 8	6	Some improvement in late season fishing, new reservoir (only some improvement because there may not be sufficient supply for 5,000 ac-ft reservoir
Site 9	6	Improves late season fishing on the Big Sandy River. Irrigation return flows may improve late season fishing on the East Fork River, new reservoi

Land Ownership

Weight 15

Rationale Very Important and somewhat unique. Could also affect cost.

Site	Score	Rationale
Boulder Lake Enlargement	1	No willing owners
Boulter Lake Enlargement	5	Neutral / USFS
Burnt Lake	5	Neutral / USFS
Church	8	Willing owners / BLM & State
Divide	1	Wilderness / No willing Owner
Dumphy Hollow	3	Possible / need more info
East Fork	5	Neutral / State
East Fork Gorge	5	Neutral / BLM & State
East Fork No.1	1	Wilderness / No willing Owner
Feltner	5	Neutral / USFS
Fremont Lake Enlargement	5	Neutral / USFS
Half Moon Lake Enlargement	1	No willing owners
Lizzie Lozier	1	No willing owners
Lower New Fork 1	3	Possible but very unlikely
Lower New Fork 1A	1	No willing owners
Lower Willow Creek (2007)	1	No willing owners
Lower Willow Creek (2016)	1	No willing owners
Marm's Lake	1	Wilderness / No willing Owner
New Fork Lake - Lower Unlet	8	From Level II Study
New Fork Lake - Raise Dam	8	From Level II Study
New Fork Lake - Raise Dam and Lower Inlet	8	From Level II Study
New Fork Narrow	1	No willing owners
New Fork Off Channel	8	Private land owners willing, State unknown
Pyramid	1	Wilderness / No willing Owner
Silver Lake	1	Wilderness / No willing Owner
Silver Creek	1	No willing owners
Silver Creek - East Fork (2 Sites)	1	No willing owners
Silver/Spring Creeks	1	No willing owners
Willow Creek	3	Neutral / USFS but historical site (Guard Station)
Willow Lake - Lower Inlet	8	Willing owners want dam rehab
Willow Lake - Lower Inlet and New Fork - Lower Inlet	8	Willing owners want dam rehab
Site 1	1	No willing owners
Site 2	5	Neutral / USFS
Site 3	1	No willing owners
Site 4	5	Neutral / BLM - Land owner need more info
Site 5	1	No willing owners
Site 6	1	Not willing
Site 7	5	Neutral / State Land
Site 8	3	Neautral / USFS (Poor access)
Site 9	8	Private is in favor if they are beneficiaries / BLM & State

Cultural and Archaeological

Weight 15

Rationale Unique & Important

Site	Score	Rationale
Boulder Lake Enlargement	1	No Cultural Resource Sites = 10; Not Eligible = 1; Eligibility Unknown = 1; Eligible Sites Present = 1; Cultural Resource Site(s) = 1
Boulter Lake Enlargement	1	
Burnt Lake	10	
Church	10	
Divide	1	
Dumphy Hollow	10	
East Fork	10	
East Fork Gorge	10	
East Fork No.1	10	
Feltner	10	
Fremont Lake Enlargement	1	
Half Moon Lake Enlargement	10	
Lizzie Lozier	10	
Lower New Fork 1	10	
Lower New Fork 1A	10	
Lower Willow Creek (2007)	10	
Lower Willow Creek (2016)	10	
Marm's Lake	10	
New Fork Lake - Lower Unlet	10	
New Fork Lake - Raise Dam	1	
New Fork Lake - Raise Dam and Lower Inlet	10	
New Fork Narrow	1	
New Fork Off Channel	10	
Pyramid	10	
Silver Lake	1	
Silver Creek	10	
Silver Creek - East Fork (2 Sites)	10	
Silver/Spring Creeks	10	
Willow Creek	1	
Willow Lake - Lower Inlet	10	
Willow Lake - Lower Inlet and New Fork - Lower Inlet	10	
Site 1	1	
Site 2	10	
Site 3	10	
Site 4	10	
Site 5	10	
Site 6	10	
Site 7	10	
Site 8	10	
Site 9	10	

Wetlands Impacts

Weight 15

Rationale Unique & Important

Site	Score	Rationale
Boulder Lake Enlargement	1	No Impact = 10; Low Impact (< 1 acre) = 7; Moderate Impact (1 - 20 acres) = 3; High Impact (> 20 acres) = 1
Boulter Lake Enlargement	3	
Burnt Lake	10	
Church	1	
Divide	10	
Dumphy Hollow	1	
East Fork	3	
East Fork Gorge	10	
East Fork No.1	10	
Feltner	10	
Fremont Lake Enlargement	10	
Half Moon Lake Enlargement	10	
Lizzie Lozier	3	
Lower New Fork 1	3	
Lower New Fork 1A	1	
Lower Willow Creek (2007)	1	
Lower Willow Creek (2016)	1	
Marm's Lake	10	
New Fork Lake - Lower Unlet	10	
New Fork Lake - Raise Dam	3	
New Fork Lake - Raise Dam and Lower Inlet	10	
New Fork Narrow	1	
New Fork Off Channel	3	
Pyramid	10	
Silver Lake	3	
Silver Creek	10	
Silver Creek - East Fork (2 Sites)	10	
Silver/Spring Creeks	10	
Willow Creek	3	
Willow Lake - Lower Inlet	10	
Willow Lake - Lower Inlet and New Fork - Lower Inlet	10	
Site 1	1	
Site 2	3	
Site 3	1	
Site 4	3	
Site 5	1	
Site 6	3	
Site 7	3	
Site 8	3	
Site 9	6	

Sensitive Species

Weight 15

Rationale Unique & Important

Site	Score	Rationale
Boulder Lake Enlargement	5	None = 10; Sensitive Species Present = 5; Threatened Species Present = 2; Endangered Species Present = 1
Boulter Lake Enlargement	2	
Burnt Lake	5	
Church	5	
Divide	5	
Dumphy Hollow	5	
East Fork	5	
East Fork Gorge	5	
East Fork No.1	5	
Feltner	5	
Fremont Lake Enlargement	5	
Half Moon Lake Enlargement	5	
Lizzie Lozier	5	
Lower New Fork 1	5	
Lower New Fork 1A	5	
Lower Willow Creek (2007)	5	
Lower Willow Creek (2016)	5	
Marm's Lake	5	
New Fork Lake - Lower Unlet	5	
New Fork Lake - Raise Dam	5	
New Fork Lake - Raise Dam and Lower Inlet	5	
New Fork Narrow	1	
New Fork Off Channel	5	
Pyramid	5	
Silver Lake	5	
Silver Creek	5	
Silver Creek - East Fork (2 Sites)	5	
Silver/Spring Creeks	5	
Willow Creek	10	
Willow Lake - Lower Inlet	5	
Willow Lake - Lower Inlet and New Fork - Lower Inlet	5	
Site 1	5	
Site 2	5	
Site 3	5	
Site 4	5	
Site 5	5	
Site 6	5	
Site 7	5	
Site 8	5	
Site 9	5	

Sage Grouse

Weight 15

Rationale Unique & Important

Site	Score	Rationale
Boulder Lake Enlargement	1	Outside of Core Habitat Areas = 10; Inside of Core Habitat Areas = 1
Boulter Lake Enlargement	10	
Burnt Lake	10	
Church	10	
Divide	10	
Dumphy Hollow	1	
East Fork	1	
East Fork Gorge	10	
East Fork No.1	10	
Feltner	10	
Fremont Lake Enlargement	10	
Half Moon Lake Enlargement	10	
Lizzie Lozier	1	
Lower New Fork 1	10	
Lower New Fork 1A	1	
Lower Willow Creek (2007)	1	
Lower Willow Creek (2016)	1	
Marm's Lake	10	
New Fork Lake - Lower Unlet	10	
New Fork Lake - Raise Dam	10	
New Fork Lake - Raise Dam and Lower Inlet	10	
New Fork Narrow	1	
New Fork Off Channel	10	
Pyramid	10	
Silver Lake	10	
Silver Creek	10	
Silver Creek - East Fork (2 Sites)	10	
Silver/Spring Creeks	1	
Willow Creek	10	
Willow Lake - Lower Inlet	10	
Willow Lake - Lower Inlet and New Fork - Lower Inlet	10	
Site 1	1	
Site 2	10	
Site 3	1	
Site 4	1	
Site 5	1	
Site 6	1	
Site 7	10	
Site 8	10	
Site 9	1	

Big Game Impacts

Weight 15

Rationale Unique & Important

Site	Score	Affected Big Game Habitats
Boulder Lake Enlargement	2.5	ELK CRUWYL MDR MIGRATION MDR CRUWIN
Boulter Lake Enlargement	10	No known big game issues
Burnt Lake	8.5	ELK CRUWYL
Church	0.5	ELK CRUWYL MDR MIGRATION MOO CRUWYL MDR CRUWIN
Divide	10	No known big game issues
Dumphy Hollow	5.5	MDR MIGRATION MOO CRUWYL
East Fork	1	MDR CRUWIN MDR MIGRATION MOO CRUWYL ELK CRUWIN
East Fork Gorge	1	ELK CRUWYL MDR CRUWIN MDR MIGRATION MOO CRUWYL
East Fork No.1	10	No known big game issues
Feltner	8.5	ELK CRUWYL
Fremont Lake Enlargement	4	MDR CRUWIN MDR MIGRATION
Half Moon Lake Enlargement	8.5	ELK CRUWYL
Lizzie Lozier	5.5	MOO CRUWYL MDR MIGRATION
Lower New Fork 1	5.5	MOO CRUWYL MDR MIGRATION
Lower New Fork 1A	5.5	MDR MIGRATION MOO CRUWYL
Lower Willow Creek (2007)	5.5	MOO CRUWYL MDR MIGRATION
Lower Willow Creek (2016)	5.5	MOO CRUWYL MDR MIGRATION
Marm's Lake	10	No known big game issues
New Fork Lake - Lower Unlet	7	MDR MIGRATION
New Fork Lake - Raise Dam	7	MDR MIGRATION
New Fork Lake - Raise Dam and Lower Inlet	7	MDR MIGRATION
New Fork Narrow	4	ANT CRUWYL MDR CRUWIN MOO CRUWYL
New Fork Off Channel	7	MDR MIGRATION
Pyramid	10	No known big game issues
Silver Lake	10	No known big game issues
Silver Creek	4	ELK CRUWYL MDR MIGRATION MOO CRUWYL
Silver Creek - East Fork (2 Sites)	4	ELK CRUWYL MDR MIGRATION MOO CRUWYL
Silver/Spring Creeks	1	ELK CRUWYL MDR MIGRATION MOO CRUWYL MDR CRUWIN
Willow Creek	5.5	MOO CRUWYL MDR MIGRATION
Willow Lake - Lower Inlet	4	ELK CRUWIN MDR MIGRATION
Willow Lake - Lower Inlet and New Fork - Lower Inlet	4	ELK CRUWIN MDR MIGRATION
Site 1	1	ELK CRUWYL MDR CRUWIN MDR MIGRATION MOO CRUWYL
Site 2	1	ELK CRUWYL MOO CRUWYL
Site 3	1	ELK CRUWYL MDR CRUWIN MDR MIGRATION MOO CRUWYL
Site 4	2.5	MDR MIGRATION ELK CRUWYL MDR CRUWIN
Site 5	7	MDR MIGRATION
Site 6	2.5	ELK CRUWYL MDR CRUWIN MDR MIGRATION
Site 7	1	ELK CRUWYL MDR CRUWIN MDR MIGRATION MOO CRUWYL
Site 8	7	ELK CRUWYL MOO CRUWYL
Site 9	1	ELK CRUWYL MOO CRUWYL MDR MIGRATION MDR CRUWIN MDR CRUWYL

Fish Impacts

Weight 15
Rationale Unique & Important

Site	Score	Rationale
Boulder Lake Enlargement	6.0	Important and popular sport fisheries. Main Species = LAT, BNT, RBT and KOE. Previously a brood source for KOE. Current agreement with Irrigation District on minimum flow. Need to identify a minimum pool if enlarged and discuss options to have flow in Boulder Creek year around. The impacts to the fisheries and recreation greatly depends on how the reservoir is managed.
Boulter Lake Enlargement	6.0	A very small system that already has a poorly functioning structure. Main species = BKT and CUT. Lower density of BNT. Discussed introducing RTC as a refuge population.
Burnt Lake	0.0	Important sport fisheries but has lower use due to the access road to the lake. Supports a healthy population of RTC. Used to support FMS but now most are hybridized with WHS and UTS. WGFD uses this lake as a source of RTC for transplanting to refuge waters. It is one of the last strong holds for this native nongame fish species. Main species = LAT, RBT. This project could have unacceptably high impacts on important nongame fish species and, therefore, was assigned a rank of zero.
Church	5.7	No fish data. Pretty certain no fish present. Impacts are likely low and will depend on how the reservoir is operated.
Divide	6.0	Old structure in place. Primarily RBT fisheries. Medium to Low use.
Dumphy Hollow	2.3	Moderate fisheries concerns
East Fork	4.3	Limited fisheries data. Mostly a BNT, RBT, and BKT population. No native game or nongame fish concerns.
East Fork Gorge	4.3	Minimal fisheries concerns.
East Fork No.1	4.3	Limited fisheries data for this portion of the East Fork River. Mostly a BNT, RBT, and BKT population. No native game or nongame fish concerns.
Feltner	4.3	Minimal fisheries concerns.
Fremont Lake Enlargement	4.7	Important and popular sport fisheries. Main Species = LAT, BNT, RBT and KOE. WGFD has storage rights and instream flow for Pine Creek. WGFD works closely with this irrigation district, Town, BLM, USFS in managing Fremont Lake and Pine Creek. There are some RTC but lower density than Burnt Lake. Need to identify a minimum pool if enlarged and discuss options.
Half Moon Lake Enlargement	0.0	One of the 3 finger lakes not dammed. There is a robust population of RTC. Important and popular sport fisheries. Main Species = LAT, BNT, RBT. This project could have unacceptably high impacts on the fishery, therefore, was assigned a rank of zero.
Lizzie Lozier	2.3	Limited fisheries data. Mostly a BNT, RBT, and BKT population. No native game or nongame fish concerns.
Lower New Fork 1	2.3	New Fork River inchannel dam. Block BNT and other species spawning. Impacts to downstream New Fork River fisheries.
Lower New Fork 1A	1.7	New Fork River inchannel dam. Block BNT and other species spawning. Impacts to downstream New Fork River fisheries.
Lower Willow Creek (2007)	2.3	Little public angler use on Willow Creek. There is a loss of stream habitat and wetlands that may impact spawning and rearing. Willow Creek is used for spawning and rearing of trout that inhabit the New Fork River.
Lower Willow Creek (2016)	2.3	Little public angler use on Willow Creek. There is a loss of stream habitat and wetlands that may impact spawning and rearing. Willow Creek is used for spawning and rearing of trout that inhabit the New Fork River.
Marm's Lake	4.7	Popular back country fishery

New Fork Lake - Lower Unlet	6.0	New Fork is an important and popular sport fishery. Main Species = KOE, LAT, RBT. A few RTC still persist but population is low. This is WGFD's main KOE source of eggs. Weir is located in the inlet of New Fork Lake. Enlargement could flood the area where the trap is located. Lowering the lake would leave the area dry and with a mud flat. Enlarging would flood in the wilderness, another issue with running our spawning trap. Draw down might impact LAT and RTC spawning. RTC are spring spawners and LAT are fall spawners. Additional discussion with WGFD will be necessary when more details are provided in the Level II study.
New Fork Lake - Raise Dam	6.0	Minimal fisheries concerns.
New Fork Lake - Raise Dam and Lower Inlet	6.0	Minimal fisheries concerns.
New Fork Narrow	0.0	Important and popular sport fishery. Used by floaters. Would prevent upstream migration of BNT and KOE to spawn in the New Fork River. Substantial impacts to existing fishery, therefore, rank dropped to zero.
New Fork Off Channel	8.7	Minimal fisheries concerns.
Pyramid	6.0	Popular back country fishery
Silver Lake	6.0	Popular back country fishery
Silver Creek	3.0	Moderate fisheries concerns
Silver Creek - East Fork (2 Sites)	3.0	Moderate fisheries concerns
Silver/Spring Creeks	2.3	BNT and BKT primarily. Not that much public lands for fishing. Impacts would be downstream and magnitude will depend on how the system is regulated.
Willow Creek	3.0	Not much data for this high in the drainage. Willow Creek probably has low angler use. Stream is used for spawning and a nursery for fish in New Fork River. BNT, BKT, RBT are the main species.
Willow Lake - Lower Inlet	4.7	Important and popular sport fisheries. Main species = RBT, BKT, LAT. Did support native suckers but now mostly WHS. Need to identify a minimum pool if enlarged and discuss options to have flow in Willow Creek year around (minimum flow). The impacts to the fisheries and recreation greatly depends on how the reservoir is managed.
Willow Lake - Lower Inlet and New Fork - Lower Inlet	3.0	Important and popular sport fisheries. Main species = RBT, BKT, LAT. Did support native suckers but now mostly WHS. Need to identify a minimum pool if enlarged and discuss options to have flow in Willow Creek year around (minimum flow). The impacts to the fisheries and recreation greatly depends on how the reservoir is managed. (See New Fork Lake - Lower Inlet for additional Fisherery concerns).
Site 1	3.7	Silver Creek - primarily BNT. Native nongame present but not sensitive species. Not much public land for anglers.
Site 2	3.0	BNT main species. Not much angler use.
Site 3	2.3	BKT, CUT, BNT, primarily. Low use by anglers. Impacts less and mostly would be flow regulation to the East Fork River.
Site 4	5.0	No direct impacts to fishery anticipated.
Site 5	2.3	Located on Muddy Creek, tributary to the East Fork River. Electofishing stations at near this location reported BNT and MWF (native but not sensitive). This drainage is probably used for spawning and rearing of BNT that inhabit the East Fork River.
Site 6	5.0	Low impacts anticipated from fisheries perspective
Site 7	5.7	Minimal fisheries concerns.
Site 8	3.0	Impacts would be to the East Fork River and New Fork River due to water storage and regulation of flows to the larger rivers systems. No fish data.
Site 9	5.0	Minimal fisheries concerns.

Cost on Date of Estimate

Weight 10

Rationale Very important but not unique. Also affected by storage, filling conveyance, water delivery, geotechnical, and land ownership.

Site	Dam Height (ft)	Dam Length (ft)	Height x Length	Spillway Size	Cost Estimate	Date of Cost Estimate	$ Cost in 2017 @ 3%/Annum Inflation	2017 $ Cost/Acre Ft
Boulder Lake Enlargement	50	850	42,500	Large	45,100,000	2001	72,372,260	1,809
Boulter Lake Enlargement	33	140	4,620	Small	745,064	2007	1,001,303	2,027
Burnt Lake	8	187	1,496	Large	344,998	1999	587,335	373
Church	85	805	68,425	Small	7,500,000	2002	11,684,756	2,749
Divide	-	-	-	Small	1,200	1938	12,397	12
Dumphy Hollow	86	2640	227,040	Small	-	-	#VALUE!	
East Fork	45	2060	92,700	Large	13,000,000	2001	20,861,184	12,271
East Fork Gorge	85	2340	198,900	Large	21,000,000	2001	33,698,835	17,736
East Fork No.1	-	-	-	Average	80,000	1938	826,477	175
Feltner	-	-	-	Large	700	1937	7,449	6
Fremont Lake Enlargement	6	140	840	Large	138,000	1980	411,961	76
Half Moon Lake Enlargement	-	-	-	Large	1,275,000	1977	4,159,098	283
Lizzie Lozier	147	1840	270,480	Average	-	-	-	-
Lower New Fork 1	30	310	9,300	Average	-	-	-	-
Lower New Fork 1A	43	1770	76,110	Average	-	-	-	-
Lower Willow Creek (2007)	75	3000	225,000	Large	45,088,648	2007	60,595,373	2,613
Lower Willow Creek (2016)	37	2560	94,720	Large	-	-	-	-
Marm's Lake	-	-	-	Small	4,000	1938	41,324	74
New Fork Lake - Lower Inlet	26	1180	30,680	Average	12,700,000	2016	13,081,000	1,392
New Fork Lake - Raise Dam	36	1100	39,600	Average	25,400,000	2016	26,162,000	2,783
New Fork Lake - Raise Dam and Lower Inlet	29	1280	37,120	Average	14,100,000	2016	14,523,000	1,545
New Fork Narrow	98	3300	323,400	Large	8,000,000	1970	32,095,160	178
New Fork Off Channel	90	1890	170,100	Small	-	-	-	-
Pyramid	-	-	-	Small	3,000	1938	30,993	49
Silver Lake				Small	-	-	-	-
Silver Creek	-	-	-	Average	8,400,000	1977	27,401,117	4,567
Silver Creek - East Fork (2 Sites)	-	-	-	Large	21,000,000	1977	68,502,794	6,009
Silver/Spring Creeks	65	3000	195,000	Large	35,250,000	2001	56,565,902	5,657
Willow Creek	126	1535	193,410	Average	-	-	-	-
Willow Lake - Lower Inlet	-	-	-	Average	-	-	-	-
Willow Lake - Lower Inlet and New Fork - Lower Inlet	-	-	-	Average	-	-	-	-
Site 1	71	1291	91,661	Large	-	-	-	-
Site 2	185	1475	272,875	Small	-	-	-	-
Site 3	83	1729	143,507	Average	-	-	-	-
Site 4	77	1488	114,576	Small	-	-	-	-
Site 5	35	462	16,170	Average	-	-	-	-
Site 6	110	1964	216,040	Small	-	-	-	-
Site 7	Main: 108 Saddle 1: 39 Saddle 2: 6 Saddle 3: 6	Main: 821 Saddle 1: 590 Saddle 2: 154 Saddle 3: 140	113,442	Small	-	-	-	-
Site 8	118	2048	241,664	Small	-	-	-	-
Site 9	106	300	31,800	Large	-	-	-	-

ATTACHMENT B

SUMMARY OF ALTERNATIVE RESERVOIR SITES

New Fork River Watershed Level I Study

Summary of Alternative Reservoir Sites

Alternative	Modification or New Construction	Embankment Height[3] (ft)	Crest Length[3] (ft)	Storage/Yield[4] (acre-ft)	On / Off Channel	Normal Pool Inundated Acreage
Boulder Lake Enlargement	Modification	50[1]	850	40,000[6]	On Channel	2616 (914 acres of new inundation)
Boulter Lake Enlargement	Modification	33 (12.5 ft raise [1])	140	494[6]	On Channel	52 (10 acres of new inundation)
Burnt Lake	New Construction (existing glacial lake)	8	187	1,576	On Channel	790 (no new inundation)
Church	New Construction	85	805	4,250[7]	Off Channel	98
Divide	New Construction (existing glacial lake)	-	-	1,027	On Channel	-
Dumphy Hollow	New Construction	86	2640	9,400	Off Channel	281
East Fork	New Construction	45	2,060	1,700 [11] (2,400)	On Channel	74 [11] (87)
East Fork Gorge	New Construction	85	2,340	1,900 [11] (4,000)	On Channel	77 [11] (130)
East Fork No.1	New Construction	-	-	4,734	On Channel	-
Feltner	New Construction	-	-	1,280	On Channel	-
Fremont Lake Enlargement	Replaced Existing Structure (New Dam)	6	140	5,395	On Channel	-
Half Moon Lake Enlargement	New Construction (existing glacial lake)	-	-	14,700[9]	On Channel	-
Lizzie Lozier	New Construction	147	1840	9400	80% On Channel (short canal needed for additional 20%)	169
Lower New Fork 1	New Construction	30	310	662	On Channel	79
Lower New Fork 1A	New Construction	43	1770	9400	On Channel	400
Lower Willow Creek (2007)	New Construction	75	3,000	23,190	On Channel	757
Lower Willow Creek (2016)	New Construction	37[8]	2560	9400	On Channel	562
Marm's Lake	New Construction (existing glacial lake)	-	-	562	On Channel	-
New Fork Lake - Lower Outlet	Modification: replace existing embankment and modify spillway	26 (3[1])	1,180 (930 [2])	9400	On Channel	1265 (no new inundation)
New Fork Lake - Raise Dam	Modification: replace existing dam, enlarge reservoir	36 (10[1])	1,100 (850 [2])	9400	On Channel	1361.3 (96 acres new inundation)
New Fork Lake - Raise Dam and Lower Inlet	Modification: replace existing dam, enlarge reservoir	29 (5[1])	1,280 (1,030 [2])	9400	On Channel	1265 (topo not accurate enough to measure inundation for 2 ft raise)
New Fork Narrow	New Construction	98	3300	180,000[10]	On Channel	8640
New Fork Off Channel	New Construction	90	1890	3002	Off Channel	71
Pyramid	New Construction (existing glacial lake)	-	-	638	On Channel	-
Silver Lake	Modification			2152 Total (933 additional ac-ft added in 1955)	On Channel	currently 157.52 acres
Silver Creek	New Construction	-	-	6,000[9]	On Channel	-
Silver Creek - East Fork (2 Sites)	New Construction	-	-	8,000 and 3,400	On Channel	-
Silver/Spring Creeks	New Construction	65	3,000	10,000[5]	On Channel	369
Willow Creek	New Construction	126	1535	9400	80 % On Channel (long canal needed for additional 20%)	186
Willow Lake - Lower Inlet	Modification	0[1]	0[2]	3600	On Channel	1825 (no new inundation)
Willow Lake - Lower Inlet and New Fork - Lower Inlet	Modification	0[1]	0[2]	3600	On Channel	3090 (no new inundation)
Site 1	New Construction	71	1291	5000	On Channel	300
Site 2	New Construction	185	1475	5000	60% On Channel (long canal for additional 40%)	79
Site 3	New Construction	83	1729	5000	On Channel	168
Site 4	New Construction	77	1488	5000	Off Channel	180
Site 5	New Construction	35	462	5000	60% On Channel (long canal for additional 40%)	638
Site 6	New Construction	110	1964	5000	Off Channel	140
Site 7	New Construction	Main: 109 Saddle: 40	Main: 821 Saddle: 588	5000	Off Channel	93
Site 8	New Construction	118	2048	5000	On Channel	116
Site 9	New Construction	120	315	5000	On Channel (outside of watershed)	135

Notes:

1. Dam height increase from existing dam height
2. Crest length increase from existing crest length. Increase due to raising of spillway to enable the Probable Maximum Flood to pass.
3. Embankment height and crest length calculations for the nine new sites included an assumed freeboard of 5 ft.
4. For modification of existing reservoirs or glacial lakes, the additional storage or yield created by the modification is reported.
5. Value reported as 85% firm yield.
6. Value reported as 80% firm yield.
7. Value reported as 90% firm yield.
8. Embankment height calculation assumed a freeboard of 5 ft.
9. Yield percentage was not reported.
10. Value reported as active storage.
11.Reported storage does not match the reported reservoir elevation. Reported storage and resulting reservoir area are not in parentheses, Calculated storage and reservoir area based on reported reservoir elevation are in parentheses.

ATTACHMENT C

TETRA TECH SCORING RATIONALE

CULTURAL AND ARCHAEOLOGICAL RESOURCES

Rationale
This factor is evaluated using GIS. If a project is located within or adjacent to any known cultural sites, coordination with the State Historic Preservation Office may be necessary. These sites will be ranked lower than sites that do not intersect cultural resources.

Scoring

None =	10
Not Eligable =	1
Unknown =	1
Eligable =	1
NRHP =	1
Weighting =	1

A low score indicates that the project is within or adjacent to a know cultural site.
Insert "Yes"/"No" into yellow highlighted cells if project is within or outside the listed classes of cultural sites.

Tt Project #	Name	Not Eligible	Score	Eligibility Unknown	Score	Eligible	Score	NRHP	Score	Minimum Rank	Comments
63	Boulder Lake Enl.	Yes	1	Yes	1	Yes	1	No	10	1	Not Eligible, Eligibility Unknown, and Eligible sites present
64	Boulter Lake Enl.	Yes	1	No	10	No	10	No	10	1	Not Eligible sites present
65	Burnt Lake	No	10	No	10	No	10	No	10	10	No cultural resource sites
66	Church Reservoir	No	10	No	10	No	10	No	10	10	No cultural resource sites
67	Divide Reservoir	Yes	1	No	10	No	10	No	10	1	Not Eligible sites present
68	Dumphy Hollow	No	10	No	10	No	10	No	10	10	No cultural resource sites
69	East Fork Reservoir	No	10	No	10	No	10	No	10	10	No cultural resource sites
70	East Fork Gorge Reservoir	No	10	No	10	No	10	No	10	10	No cultural resource sites
71	East Fork No. 1	No	10	No	10	No	10	No	10	10	No cultural resource sites
72	Feltner	No	10	No	10	No	10	No	10	10	No cultural resource sites
73	Fremont Lake Enl.	Yes	1	No	10	No	10	No	10	1	Not Eligible sites present
74	Half Moon Lake Enl.	No	10	No	10	No	10	No	10	10	No cultural resource sites
75	Lizzie Lozier	No	10	No	10	No	10	No	10	10	No cultural resource sites
76	Lower New Fork 1	No	10	No	10	No	10	No	10	10	No cultural resource sites
77	Lower New Fork 1A	No	10	No	10	No	10	No	10	10	No cultural resource sites
78	Lower Willow Creek (2007)	No	10	No	10	No	10	No	10	10	No cultural resource sites
79	Lower Willow Creek (2016) Footprint 1	No	10	No	10	No	10	No	10	10	No cultural resource sites
80	Lower Willow Creek (2016) Footprint 2	No	10	No	10	No	10	No	10	10	No cultural resource sites
81	Marm's Lake	No	10	No	10	No	10	No	10	10	No cultural resource sites
82	New Fork Lake - Lower Intlet	No	10	No	10	No	10	No	10	10	No cultural resource sites
83	New Fork Lake - Raise Dam	Yes	1	Yes	1	No	10	No	10	1	Not Eligible and Eligibility Unknown sites present
84	New Fork Lake - Riase Dam and Lower Inlet	No	10	No	10	No	10	No	10	10	No cultural resource sites
85	New Fork Narrows	Yes	1	Yes	1	Yes	1	Yes	1	1	Multiple cultural resource sites
86	New Fork Off Channel	No	10	No	10	No	10	No	10	10	No cultural resource sites
87	Pyramid Lake	No	10	No	10	No	10	No	10	10	No cultural resource sites
88	Silver Lake	Yes	1	No	10	No	10	No	10	1	Not Eligible sites present
89	Silver Creek	No	10	No	10	No	10	No	10	10	No cultural resource sites
90	Silver Creek - East Fork (Site 1)	No	10	No	10	No	10	No	10	10	No cultural resource sites
91	Silver Creek - East Fork (Site 2)	No	10	No	10	No	10	No	10	10	No cultural resource sites
92	Silver/Spring Creeks Reservoir	No	10	No	10	No	10	No	10	10	No cultural resource sites
93	Willow Creek	No	10	No	10	Yes	1	No	10	1	Eligible sites present
94	Willow Lake - Lower Inlet	No	10	No	10	No	10	No	10	10	No cultural resource sites
96	Site 1	No	10	Yes	1	Yes	1	No	10	1	Eligibility Unknown and Eligible sites present
97	Site 2	No	10	No	10	No	10	No	10	10	No cultural resource sites
98	Site 3	No	10	No	10	No	10	No	10	10	No cultural resource sites
99	Site 4	No	10	No	10	No	10	No	10	10	No cultural resource sites
100	Site 5	No	10	No	10	No	10	No	10	10	No cultural resource sites
101	Site 6	No	10	No	10	No	10	No	10	10	No cultural resource sites
102	Site 7	No	10	No	10	No	10	No	10	10	No cultural resource sites
103	Site 8	No	10	No	10	No	10	No	10	10	No cultural resource sites
104	Site 9		FALSE		FALSE		FALSE		FALSE	0	No Data

WETLAND ENCROACHMENT

Rationale
This factor is evaluated in GIS. The larger the magnitude of impact (i.e., acres directly affected) the lower the score.

Scoring

No Impact =	10
Low (< 1 acre) =	7
Moderate (1 - 20 acres) =	3
High (> 20 acres) =	1
Weighting =	1

A low score indicates the potential for adverse wetland impact.
Insert result ("High", "Moderate", or "No Impact") into yellow highlighted cells

Project #	Name	Acres	Result	Score
63	Boulder Lake Enl.	30.70	High	1
64	Boulter Lake Enl.	1.08	Moderate	3
65	Burnt Lake	0.00	No Impact	10
66	Church Reservoir	28.42	High	1
67	Divide Reservoir	0.00	No Impact	10
68	Dumphy Hollow	23.28	High	1
69	East Fork Reservoir	10.16	Moderate	3
70	East Fork Gorge Reservoir	0.00	No Impact	10
71	East Fork No. 1	0.00	No Impact	10
72	Feltner	0.00	No Impact	10
73	Fremont Lake Enl.	0.00	No Impact	10
74	Half Moon Lake Enl.	0.00	No Impact	10
75	Lizzie Lozier	18.59	Moderate	3
76	Lower New Fork 1	3.43	Moderate	3
77	Lower New Fork 1A	213.64	High	1
78	Lower Willow Creek (2007)	432.07	High	1
79	Lower Willow Creek (2016) Footprint 1	351.56	High	1
80	Lower Willow Creek (2016) Footprint 2	411.35	High	1
81	Marm's Lake	0.00	No Impact	10
82	New Fork Lake - Lower Intlet	0.00	No Impact	10
83	New Fork Lake - Raise Dam	14.95	Moderate	3
84	New Fork Lake - Riase Dam and Lower Inlet	0.00	No Impact	10
85	New Fork Narrows	4044.06	High	1
86	New Fork Off Channel	2.09	Moderate	3
87	Pyramid Lake	0.00	No Impact	10
88	Silver Lake	10.44	Moderate	3
89	Silver Creek	0.00	No Impact	10
90	Silver Creek - East Fork (Site 1)	0.00	No Impact	10
91	Silver Creek - East Fork (Site 2)	0.00	No Impact	10
92	Silver/Spring Creeks Reservoir	142.04	High	1
93	Willow Creek	15.55	Moderate	3
94	Willow Lake - Lower Inlet	0.00	No Impact	10
96	Site 1	89.65	High	1
97	Site 2	1.87	Moderate	3
98	Site 3	89.15	High	1
99	Site 4	7.88	Moderate	3
100	Site 5	458.10	High	1
101	Site 6	5.91	Moderate	3
102	Site 7	9.13	Moderate	3
103	Site 8	7.26	Moderate	3
104	Site 9	6.86	Moderate	3

SENSITIVE SPECIES

Rationale
This factor is evaluated in GIS. Projects that are located within the known range of federally listed endangered or threatened species, BLM sensitive, USFS sensitive, or Wyoming Tier 1 sensitive species may adversely impact wildlife and will require additional agency coordination and are scored 1. Projects outside the known range of these species are ranked 10.

Scoring

None =	10
Sensitive =	5
Threatened =	2
Endangered =	1
Weighting =	1

A low score indicates the potential presence of sensitive species.
Insert "Yes"/"No" into yellow highlighted cells if project is within or outside know range of sensitive, threatened, or endangered species

Project #	Name	Wyo Teir 1	Score	BLM Sensitve	Score	USFS Sensitive	Score	Threatened	Score	Endangered	Score	Minimum Rank	Comments
63	Boulder Lake Enl.	Yes	5	Yes	5	Yes	5	No	10	No	10	5	Wyoming Teir 1, BLM and USFS Sensitive Species
64	Boulter Lake Enl.	No	10	Yes	5	Yes	5	Yes	2	No	10	2	USFWS Threatened species
65	Burnt Lake	Yes	5	Yes	5	Yes	5	No	10	No	10	5	Wyoming Teir 1, BLM and USFS Sensitive Species
66	Church Reservoir	Yes	5	Yes	5	Yes	5	No	10	No	10	5	Wyoming Teir 1, BLM and USFS Sensitive Species
67	Divide Reservoir	No	10	Yes	5	Yes	5	No	10	No	10	5	BLM and USFS Sensitive Species
68	Dumphy Hollow	Yes	5	Yes	5	Yes	5	No	10	No	10	5	Wyoming Teir 1, BLM and USFS Sensitive Species
69	East Fork Reservoir	Yes	5	Yes	5	Yes	5	No	10	No	10	5	Wyoming Teir 1, BLM and USFS Sensitive Species
70	East Fork Gorge Reservoir	Yes	5	Yes	5	Yes	5	No	10	No	10	5	Wyoming Teir 1, BLM and USFS Sensitive Species
71	East Fork No. 1	No	10	Yes	5	Yes	5	No	10	No	10	5	BLM and USFS Sensitive Species
72	Feltner	Yes	5	Yes	5	Yes	5	No	10	No	10	5	Wyoming Teir 1, BLM and USFS Sensitive Species
73	Fremont Lake Enl.	Yes	5	Yes	5	Yes	5	No	10	No	10	5	Wyoming Teir 1, BLM and USFS Sensitive Species
74	Half Moon Lake Enl.	Yes	5	Yes	5	Yes	5	No	10	No	10	5	Wyoming Teir 1, BLM and USFS Sensitive Species
75	Lizzie Lozier	Yes	5	Yes	5	Yes	5	No	10	No	10	5	Wyoming Teir 1, BLM and USFS Sensitive Species
76	Lower New Fork 1	Yes	5	Yes	5	Yes	5	No	10	No	10	5	Wyoming Teir 1, BLM and USFS Sensitive Species
77	Lower New Fork 1A	Yes	5	Yes	5	Yes	5	No	10	No	10	5	Wyoming Teir 1, BLM and USFS Sensitive Species
78	Lower Willow Creek (2007)	Yes	5	Yes	5	Yes	5	No	10	No	10	5	Wyoming Teir 1, BLM and USFS Sensitive Species
79	Lower Willow Creek (2016) Footprint 1	Yes	5	Yes	5	Yes	5	No	10	No	10	5	Wyoming Teir 1, BLM and USFS Sensitive Species
80	Lower Willow Creek (2016) Footprint 2	Yes	5	Yes	5	Yes	5	No	10	No	10	5	Wyoming Teir 1, BLM and USFS Sensitive Species
81	Marm's Lake	No	10	Yes	5	Yes	5	No	10	No	10	5	BLM and USFS Sensitive Species
82	New Fork Lake - Lower Intlet	Yes	5	Yes	5	Yes	5	No	10	No	10	5	Wyoming Teir 1, BLM and USFS Sensitive Species
83	New Fork Lake - Raise Dam	Yes	5	Yes	5	Yes	5	No	10	No	10	5	Wyoming Teir 1, BLM and USFS Sensitive Species
84	New Fork Lake - Riase Dam and Lower Inlet	Yes	5	Yes	5	Yes	5	No	10	No	10	5	Wyoming Teir 1, BLM and USFS Sensitive Species
85	New Fork Narrows	Yes	5	Yes	5	Yes	5	No	10	Yes	1	1	Wyoming Teir 1, BLM and USFS Sensitive Species; USFWS Endangered
86	New Fork Off Channel	Yes	5	Yes	5	Yes	5	No	10	No	10	5	Wyoming Teir 1, BLM and USFS Sensitive Species
87	Pyramid Lake	No	10	Yes	5	Yes	5	No	10	No	10	5	BLM and USFS Sensitive Species
88	Silver Lake	No	10	Yes	5	Yes	5	No	10	No	10	5	BLM and USFS Sensitive Species
89	Silver Creek	No	10	Yes	5	Yes	5	No	10	No	10	5	BLM and USFS Sensitive Species
90	Silver Creek - East Fork (Site 1)	No	10	Yes	5	Yes	5	No	10	No	10	5	BLM and USFS Sensitive Species
91	Silver Creek - East Fork (Site 2)	Yes	5	Yes	5	Yes	5	No	10	No	10	5	Wyoming Teir 1, BLM and USFS Sensitive Species
92	Silver/Spring Creeks Reservoir	Yes	5	Yes	5	Yes	5	No	10	No	10	5	Wyoming Teir 1, BLM and USFS Sensitive Species
93	Willow Creek	No	10	No	10	No	10	No	10	No	10	10	No known rare species occurences
94	Willow Lake - Lower Inlet	Yes	5	Yes	5	Yes	5	No	10	No	10	5	Wyoming Teir 1, BLM and USFS Sensitive Species
96	Site 1	No	10	Yes	5	Yes	5	No	10	No	10	5	BLM and USFS Sensitive Species
97	Site 2	Yes	5	Yes	5	Yes	5	No	10	No	10	5	Wyoming Teir 1, BLM and USFS Sensitive Species
98	Site 3	Yes	5	Yes	5	Yes	5	No	10	No	10	5	Wyoming Teir 1, BLM and USFS Sensitive Species
99	Site 4	Yes	5	Yes	5	Yes	5	No	10	No	10	5	Wyoming Teir 1, BLM and USFS Sensitive Species
100	Site 5	Yes	5	Yes	5	Yes	5	No	10	No	10	5	Wyoming Teir 1, BLM and USFS Sensitive Species
101	Site 6	Yes	5	Yes	5	Yes	5	No	10	No	10	5	Wyoming Teir 1, BLM and USFS Sensitive Species
102	Site 7	Yes	5	Yes	5	Yes	5	No	10	No	10	5	Wyoming Teir 1, BLM and USFS Sensitive Species
103	Site 8	Yes	5	Yes	5	Yes	5	No	10	No	10	5	Wyoming Teir 1, BLM and USFS Sensitive Species
104	Site 9	Yes	5	Yes	5	Yes	5	No	10	No	10	5	Wyoming Teir 1, BLM and USFS Sensitive Species

SAGE GROUSE

Rationale
This factor is evaluated in GIS and is based on location of the project site relative to CORE sage grouse habitat areas. Project sites completely outside of CORE areas were scored 10, sites within CORE were scored 1.

Scoring

Outside = 10
Inside = 1
Weighting = 1

A low score indicates that the project site is inside CORE sage grouse habitat.

Insert result ("Outside" or "Inside") into yellow highlighted cells

Project #	Name	Result	Score	Rank
63	Boulder Lake Enl.	Inside	1	1
64	Boulter Lake Enl.	Outside	10	10
65	Burnt Lake	Outside	10	10
66	Church Reservoir	Outside	10	10
67	Divide Reservoir	Outside	10	10
68	Dumphy Hollow	Inside	1	1
69	East Fork Reservoir	Inside	1	1
70	East Fork Gorge Reservoir	Outside	10	10
71	East Fork No. 1	Outside	10	10
72	Feltner	Outside	10	10
73	Fremont Lake Enl.	Outside	10	10
74	Half Moon Lake Enl.	Outside	10	10
75	Lizzie Lozier	Inside	1	1
76	Lower New Fork 1	Outside	10	10
77	Lower New Fork 1A	Inside	1	1
78	Lower Willow Creek (2007)	Inside	1	1
79	Lower Willow Creek (2016) Footprint 1	Inside	1	1
80	Lower Willow Creek (2016) Footprint 2	Inside	1	1
81	Marm's Lake	Outside	10	10
82	New Fork Lake - Lower Intlet	Outside	10	10
83	New Fork Lake - Raise Dam	Outside	10	10
84	New Fork Lake - Riase Dam and Lower Inlet	Outside	10	10
85	New Fork Narrows	Inside	1	1
86	New Fork Off Channel	Outside	10	10
87	Pyramid Lake	Outside	10	10
88	Silver Lake	Outside	10	10
89	Silver Creek	Outside	10	10
90	Silver Creek - East Fork (Site 1)	Outside	10	10
91	Silver Creek - East Fork (Site 2)	Outside	10	10
92	Silver/Spring Creeks Reservoir	Inside	1	1
93	Willow Creek	Outside	10	10
94	Willow Lake - Lower Inlet	Outside	10	10
96	Site 1	Inside	1	1
97	Site 2	Outside	10	10
98	Site 3	Inside	1	1
99	Site 4	Inside	1	1
100	Site 5	Inside	1	1
101	Site 6	Inside	1	1
102	Site 7	Outside	10	10
103	Site 8	Outside	10	10
104	Site 9	Inside	1	1

BIG GAME

Rationale
This factor is evaluated using GIS and considers the potential for impacts to big game to be greatest in "crucial" wildlife habitat (crucial winter and crucial winter/yearlong) and within the mule deer migratory corridor. Individual scores have been assigned to each habitat type (columns M - S). The overall project rank is calculated as 10 minus the sum of the individual scores. A score of 10 suggests negligable big game impacts. A score of 1 suggests that the potential exists for substantial big game impacts. This is a preliminary GIS-based analysis. A low score does not necessarily mean that there will, in fact, be substantial big game impacts. Rather, it indicates that further study, and/or contact with the WGFD should be considered.

Scoring
See columns M - S

A low score indicates that impacts to big game should be considered.

Project #	Name	Affected Big Game Habitats	Rank	Individual Scores by Habitat Type						
				ELK CRUWYL	ELK CRUWIN	MOO CRUWYL	MDR CRUWYL	MDR CRUWIN	MDR MIGRATION	ANT CRUWYL
63	Boulder Lake Enl.	ELK CRUWYL MDR MIGRATION MDR CRUWIN	2.5	1.5				3	3	
64	Boulter Lake Enl.	No known big game issues	10							
65	Burnt Lake	ELK CRUWYL	8.5	1.5						
66	Church Reservoir	ELK CRUWYL MDR MIGRATION MOO CRUWYL MDR CRUWIN	0.5	1.5			2	3	3	
67	Divide Reservoir	No known big game issues	10							
68	Dumphy Hollow	MDR MIGRATION MOO CRUWYL	5.5			1.5			3	
69	East Fork Reservoir	MDR CRUWIN MDR MIGRATION MOO CRUWYL ELK CRUWIN	1	1.5		1.5		3	3	
70	East Fork Gorge Reservoir	ELK CRUWYL MDR CRUWIN MDR MIGRATION MOO CRUWYL	1	1.5		1.5		3	3	
71	East Fork No. 1	No known big game issues	10							
72	Feltner	ELK CRUWYL	8.5	1.5						
73	Fremont Lake Enl.	MDR CRUWIN MDR MIGRATION	4					3	3	
74	Half Moon Lake Enl.	ELK CRUWYL	8.5	1.5						
75	Lizzie Lozier	MOO CRUWYL MDR MIGRATION	5.5			1.5			3	
76	Lower New Fork 1	MOO CRUWYL MDR MIGRATION	5.5			1.5			3	
77	Lower New Fork 1A	MDR MIGRATION MOO CRUWYL	5.5			1.5			3	
78	Lower Willow Creek (2007)	MOO CRUWYL MDR MIGRATION	5.5			1.5			3	
79	Lower Willow Creek (2016) Footprint 1	MOO CRUWYL MDR MIGRATION	5.5			1.5			3	
80	Lower Willow Creek (2016) Footprint 2	MOO CRUWYL MDR MIGRATION	5.5			1.5			3	
81	Marm's Lake	No known big game issues	10							
82	New Fork Lake - Lower Intlet	MDR MIGRATION	7						3	
83	New Fork Lake - Raise Dam	MDR MIGRATION	7						3	
84	New Fork Lake - Riase Dam and Lower Inlet	MDR MIGRATION	7						3	
85	New Fork Narrows	ANT CRUWYL MDR CRUWIN MOO CRUWYL	4			1.5		3		1.5
86	New Fork Off Channel	MDR MIGRATION	7						3	
87	Pyramid Lake	No known big game issues	10							
88	Silver Lake	No known big game issues	10							
89	Silver Creek	ELK CRUWYL MDR MIGRATION MOO CRUWYL	4	1.5		1.5			3	
90	Silver Creek - East Fork (Site 1)	ELK CRUWYL MDR MIGRATION MOO CRUWYL	4	1.5		1.5			3	
91	Silver Creek - East Fork (Site 2)	ELK CRUWYL MDR MIGRATION MOO CRUWYL	4	1.5		1.5			3	
92	Silver/Spring Creeks Reservoir	ELK CRUWYL MDR MIGRATION MOO CRUWYL MDR CRUWIN	1	1.5		1.5		3	3	
93	Willow Creek	MOO CRUWYL MDR MIGRATION	5.5			1.5			3	
94	Willow Lake - Lower Inlet	ELK CRUWIN MDR MIGRATION	4		3				3	
96	Site 1	ELK CRUWYL MDR CRUWIN MDR MIGRATION MOO CRUWYL	1	1.5		1.5		3	3	
97	Site 2	ELK CRUWYL MOO CRUWYL	7	1.5		1.5				
98	Site 3	ELK CRUWYL MDR CRUWIN MDR MIGRATION MOO CRUWYL	1	1.5		1.5		3	3	
99	Site 4	MDR MIGRATION ELK CRUWYL MDR CRUWIN	2.5	1.5				3	3	
100	Site 5	MDR MIGRATION	7						3	
101	Site 6	ELK CRUWYL MDR CRUWIN MDR MIGRATION	2.5	1.5				3	3	
102	Site 7	ELK CRUWYL MDR CRUWIN MDR MIGRATION MOO CRUWYL	1	1.5		1.5		3	3	
103	Site 8	ELK CRUWYL MOO CRUWYL	7	1.5		1.5				
104	Site 9	ELK CRUWYL MOO CRUWYL MDR MIGRATION MDR CRUWIN MDR CRUWYL	-1	1.5		1.5	2	3	3	

FISHERIES (Preliminary screening-level evaluation)

Rationale
Fisheries are evaluated based on the combination of three factors: 1) WGFD preliminary assessment of fisheries impacts, 2) streamflow class, and 3) stream habitat loss. Scores assigned to each are averaged for a total fisheries score. The lower the score, the greater the potential for adverse impact.

Fisheries Impacts: WGFD preliminarily evaluated each of the projects and scored them based on their knowledge of the fishery that may be affected by the project.

Scoring

No impact =	10
Low =	7
Moderate =	3
High =	1

Streamflow Class
Streams are classified by the National Hydrography Dataset (NHD) as perennial, intermittant, and ephemeral. For the purpose of this preliminary screening, it is assumed that

Scoring

Not Connected =	10
Ephemeral =	9
Intermittant =	5
Perennial =	1

Stream Habitat Loss
This factor ranks the approximate amount of stream habitat that would be lost as a result of project implementation.

Scoring

None =	10
Low (< 1 mile) =	5
Moderate (1 - 3 miles) =	3
High ((> 3 miles) =	1
Weighting =	1

The lower the score, the greater the potential for negative impact
Cells shaded yellow are for data entry

Project #	Project Name	Affected Waterbody	Fisheries Impact		Streamflow Class		Stream Habitat Loss (Miles)		Average Rank	Comments
			Result	Score	Result	Score	Result	Score		
86	New Fork Off Channel	Unnamed Tributary to New Fork River	Low	7	Ephemeral	9	None	10	8.7	Minimal fisheries concerns.
63	Boulder Lake Enl.	Boulder Creek	Low	7	Perennial	1	None	10	6.0	Important and popular sport fisheries. Main Species = LAT, BNT, RBT and KOE. Previously a brood source for KOE. Current agreement with Irrigation District on minimum flow. Need to identify a minimum pool if enlarged and discuss options to have flow in Boulder Creek y around. The impacts to the fisheries and recreation greatly depends on how the reservoir is managed
64	Boulter Lake Enl.	Unnamed trib to East Fork River	Low	7	Perennial	1	None	10	6.0	A very small system that already has a poorly functioning structure. Main species = BKT and CUT. Lower density of BNT. Discussed introducing RTC as a refuge population.
67	Divide Reservoir	Divide Creek	Low	7	Perennial	1	None	10	6.0	Old structure in place. Primarily RBT fisheries. Medium to Low use.
82	New Fork Lake - Lower Intlet	New For River	Low	7	Perennial	1	None	10	6.0	New Fork is an important and popular sport fishery. Main Species = KOE, LAT, RBT. A few RTC still persist but population is low. This is WGFD's main KOE source of eggs. Weir is located in the inlet of New Fork Lake. Enlargement could flood the area where the trap is locat Lowering the lake would leave the area dry and with a mud flat. Enlarging would flood in the wilderness, another issue with running our spawning trap. Draw down might impact LAT and RTC spawning. RTC are spring spawners and LAT are fall spawners. Additional discussion with WGFD will be necessary when more details are provided in the Level II stud
83	New Fork Lake - Raise Dam	New Fork River	Low	7	Perennial	1	None	10	6.0	Minimal fisheries concerns.
84	New Fork Lake - Riase Dam and Lower Inlet	New Fork River	Low	7	Perennial	1	None	10	6.0	Minimal fisheries concerns.
87	Pyramid Lake	Unnamed Tributar to East Fork	Low	7	Perennial	1	None	10	6.0	Popular back country fishery
88	Silver Lake	Silver Creek	Low	7	Perennial	1	None	10	6.0	Popular back country fishery
66	Church Reservoir	Unamed tributary to Pocket Creek	Low	7	Intermittant	5	Low	5	5.7	No fish data. Pretty certain no fish present. Impacts are likely low and will depend on how the reservoir is operated.
102	Site 7	Unnamed Tributary to Pocket Creek	Low	7	Intermittant	5	Low	5	5.7	Minimal fisheries concerns.
99	Site 4	Unnamed tributary to East Fork	Low	7	Intermittant	5	Moderate	3	5.0	No direct impacts to fishery anticipated.
101	Site 6	Unnamed Tributary to Pole Creek	Low	7	Intermittant	5	Moderate	3	5.0	Low impacts anticipated from fisheries perspective
104	Site 9	Big Sandy River		FALSE	Perennial	1	Low	5	3.0	Outside New Fork watershed. Incomplete score.
73	Fremont Lake Enl.	Pine Creek	Moderate	3	Perennial	1	None	10	4.7	Important and popular sport fisheries. Main Species = LAT, BNT, RBT and KOE. WGFD has storage rights and instream flow for Pine Creek. WGFD works closely with this irrigation district, Town, BLM, USFS in managing Fremont Lake and Pine Creek. There are some RTC lower density than Burnt Lake. Need to identify a minimum pool if enlarged and discuss option
81	Marm's Lake	Dad's Creek	Moderate	3	Perennial	1	None	10	4.7	Popular back country fishery
94	Willow Lake - Lower Inlet	Lake Creek	Moderate	3	Perennial	1	None	10	4.7	Important and popular sport fisheries. Main species = RBT, BKT, LAT. Did support native suckers but now mostly WHS. Need to identify a minimum pool if enlarged and discuss options to have flow in Willow Creek year around (minimum flow). The impacts to the fisheries recreation greatly depends on how the reservoir is managed.
69	East Fork Reservoir	East Fork River	Low	7	Perennial	1	Low	5	4.3	Limited fisheries data for this portion of the East Fork River. Mostly a BNT, RBT, and BKT population. No native game or nongame fish concerns.
70	East Fork Gorge Reservoir	East Fork River	Low	7	Perennial	1	Low	5	4.3	Limited fisheries data. Mostly a BNT, RBT, and BKT population. No native game or nongame fish concerns.
71	East Fork No. 1	East Fork River	Low	7	Perennial	1	Low	5	4.3	Minimal fisheries concerns.
72	Feltner	Pole Creek	Low	7	Perennial	1	Low	5	4.3	Minimal fisheries concerns.
96	Site 1	Silver Creek	Low	7	Perennial	1	Moderate	3	3.7	Silver Creek - primarily BNT. Native nongame present but not sensitive species. Not much public land for anglers.
89	Silver Creek	Silver Creek	Moderate	3	Perennial	1	Low	5	3.0	Moderate fisheries concerns
90	Silver Creek - East Fork (Site 1)	Silver Creek	Moderate	3	Perennial	1	Low	5	3.0	Moderate fisheries concerns
91	Silver Creek - East Fork (Site 2)	Silver Creek	Moderate	3	Perennial	1	Low	5	3.0	Moderate fisheries concerns
93	Willow Creek	Willow Creek	Moderate	3	Perennial	1	Low	5	3.0	Not much data for this high in the drainage. Willow Creek probably has low angler use. Stream is used for spawning and a nursery for fish in New Fork River. BNT, BKT, RBT are the main species.
97	Site 2	Muddy Creek	Moderate	3	Perennial	1	Low	5	3.0	BNT main species. Not much angler use.
103	Site 8	Jim Creek	Moderate	3	Perennial	1	Low	5	3.0	Impacts would be to the East Fork River and New Fork River due to water storage and regulation of flows to the larger rivers systems. No fish data.
68	Dumphy Hollow	Unnamed tributary (to Williow Creek	Moderate	3	Perennial	1	Moderate	3	2.3	Moderate fisheries concerns
75	Lizzie Lozier	Willow Creek	Moderate	3	Perennial	1	Moderate	3	2.3	Limited fisheries data. Mostly a BNT, RBT, and BKT population. No native game or nongame fish concerns.
76	Lower New Fork 1	New Fork River	High	1	Perennial	1	Low	5	2.3	New Fork River inchannel dam. Block BNT and other species spawning. Impacts to downstream New Fork River fisheries.
78	Lower Willow Creek (2007)	Willow Creek	Moderate	3	Perennial	1	Moderate	3	2.3	Little public angler use on Willow Creek. There is a loss of stream habitat and wetlands that may impact spawning and rearing. Willow Creek is used for spawning and rearing of trout that inhabit the New Fork River.
79	Lower Willow Creek (2016) Footprint 1	Willow Creek	Moderate	3	Perennial	1	Moderate	3	2.3	Little public angler use on Willow Creek. There is a loss of stream habitat and wetlands that may impact spawning and rearing. Willow Creek is used for spawning and rearing of trout that inhabit the New Fork River.
80	Lower Willow Creek (2016) Footprint 2	Willow Creek	Moderate	3	Perennial	1	Moderate	3	2.3	Little public angler use on Willow Creek. There is a loss of stream habitat and wetlands that may impact spawning and rearing. Willow Creek is used for spawning and rearing of trout that inhabit the New Fork River.
92	Silver/Spring Creeks Reservoir	Silver and Spring Creeks	Moderate	3	Perennial	1	Moderate	3	2.3	BNT and BKT primarily. Not that much public lands for fishing. Impacts would be downstream and magnitude will depend on how the system is regulated.
98	Site 3	Spring and Scab Creeks	Moderate	3	Perennial	1	Moderate	3	2.3	BKT, CUT, BNT, primarily. Low use by anglers. Impacts less and mostly would be flow regulation to the East Fork River.
100	Site 5	Muddy Creek	Moderate	3	Perennial	1	Moderate	3	2.3	Located on Muddy Creek, tributary to the East Fork River. Electofishing stations at near this location reported BNT and MWF (native but not sensitive). This drainage is probably used for spawning and rearing of BNT that inhabit the East Fork River.
77	Lower New Fork 1A	New Fork River	High	1	Perennial	1	Moderate	3	1.7	New Fork River inchannel dam. Block BNT and other species spawning. Impacts to downstream New Fork River fisheries.
65	Burnt Lake	Falls Creek	High	0	Perennial	1	None	10	0.0	Important sport fisheries but has lower use due to the access road to the lake. Supports a healthy population of RTC. Used to support FMS but now most are hybridized with WHS and UTS. WGFD uses this lake as a source of RTC for transplanting to refuge waters. It is one of the l strong holds for this native nongame fish species. Main species = LAT, RBT. This project could have unacceptably high impacts on important nongame fish species and, therefore, was assigned a rank of zero.
74	Half Moon Lake Enl.	Pole Creek	High	0	Perennial	1	None	10	0.0	One of the 3 finger lakes not dammed. There is a robust population of RTC. Important and popular sport fisheries. Main Species = LAT, BNT, RBT. This project could have unacceptably high impacts on the fishery, therefore, was assigned a rank of zero.
85	New Fork Narrows	New Fork River	High	0	Perennial	1	High	1	0.0	Important and popular sport fishery. Used by floaters. Would prevent upstream migration of BNT and KOE to spawn in the New Fork River. Substantial impacts to existing fishery, therefore, rank dropped to zero.

LAND OWNERSHIP

Rationale
This factor is for informational purposes only. Potential results for this screening category include sites entirely within private land, sites entirely within state land, sites entirely within federal land (i.e., USFS, BLM, USFWS), or sites with mixed ownership.

Scoring

Private =	NA
BIA	NA
State =	NA
USFS =	NA
BLM =	NA
USFWS =	NA
Weighting =	NA

The higher the score, the greater the potential for negative impact
Cells shaded yellow are for data entry

Project #	Name	Private	BIA	State	USFS	BLM	USFWS
63	Boulder Lake Enl.	Yes	No	No	Yes	Yes	Yes
64	Boulter Lake Enl.	No	No	No	Yes	No	No
65	Burnt Lake	No	No	No	Yes	No	No
66	Church Reservoir	Yes	No	Yes	No	Yes	No
67	Divide Reservoir	No	No	No	Yes	No	No
68	Dumphy Hollow	Yes	No	No	No	No	No
69	East Fork Reservoir	No	No	Yes	No	No	No
70	East Fork Gorge Reservoir	No	No	Yes	No	Yes	No
71	East Fork No. 1	No	No	No	Yes	No	No
72	Feltner	No	No	No	Yes	No	No
73	Fremont Lake Enl.	No	No	No	Yes	No	No
74	Half Moon Lake Enl.	Yes	No	No	No	No	Yes
75	Lizzie Lozier	Yes	No	No	Yes	No	No
76	Lower New Fork 1	Yes	No	No	No	Yes	No
77	Lower New Fork 1A	Yes	No	Yes	No	Yes	No
78	Lower Willow Creek (2007)	Yes	No	No	No	No	No
79	Lower Willow Creek (2016) Footprint 1	Yes	No	No	No	No	No
80	Lower Willow Creek (2016) Footprint 2	Yes	No	No	No	No	No
81	Marm's Lake	No	No	No	Yes	No	No
82	New Fork Lake - Lower Intlet	No	No	No	Yes	No	No
83	New Fork Lake - Raise Dam	No	No	No	Yes	No	Yes
84	New Fork Lake - Riase Dam and Lower Inlet	No	No	No	Yes	No	No
85	New Fork Narrows	Yes	No	Yes	No	Yes	Yes
86	New Fork Off Channel	No	No	Yes	No	No	No
87	Pyramid Lake	No	No	No	Yes	No	No
88	Silver Lake	No	No	No	Yes	No	No
89	Silver Creek	Yes	No	No	No	Yes	No
90	Silver Creek - East Fork (Site 1)	Yes	No	No	No	No	No
91	Silver Creek - East Fork (Site 2)	No	No	No	No	Yes	No
92	Silver/Spring Creeks Reservoir	Yes	No	No	No	Yes	No
93	Willow Creek	No	No	No	Yes	No	No
94	Willow Lake - Lower Inlet	No	No	No	Yes	No	No
96	Site 1	Yes	No	No	No	Yes	No
97	Site 2	No	No	No	Yes	No	No
98	Site 3	Yes	No	Yes	No	Yes	No
99	Site 4	Yes	No	No	No	Yes	No
100	Site 5	Yes	No	Yes	No	No	No
101	Site 6	Yes	No	No	No	No	No
102	Site 7	No	No	Yes	No	Yes	No
103	Site 8	No	No	No	Yes	No	No
104	Site 9	Yes	No	Yes	No	Yes	No

SPECIAL DESIGNATED AREAS

Rationale

This factor is evaluated in GIS. Additional layers of oversight/regulation may be imposed for activities located on specially designated lands, thereby complicating project approval and implementation. Potential results for this screening category include: "None", "Designated Wilderness" (W), "Wilderness Study Area" (WSA), "Wildlife Habitat Management Area" (WHMA), "Areas of Critical Environmental Concern" (ACEC), "Special Recreation Management Area" (SRMA), and "Management Area" (MA).

Scoring

None =	10
MA =	7
SRMA =	5
ACEC =	5
WHMA =	5
WSA =	3
W =	1
Weighting =	1

Project sites within special designated areas receive a low score.

Insert result ("None", "MA", "SRMA", "ACEC", "WHMA", "WSA", "W") into yellow highlighted cells

Project #	Name	MA	Score	SRMA	Score	ACEC	Score	WHMA	Score	WSA	Score	Wilderness	Score	Minimum Rank	Comments
63	Boulder Lake Enl.	Yes	7	Yes	5	No	10	Yes	5	No	10	Yes	1	1	MA, SRMA, WHMA, Wilderness
64	Boulter Lake Enl.	No	10	No	10	No	10	No	10	No	10	No	10	10	Not within special designated area
65	Burnt Lake	No	10	No	10	No	10	No	10	No	10	No	10	10	Not within special designated area
66	Church Reservoir	Yes	7	No	10	No	10	No	10	No	10	No	10	7	MA
67	Divide Reservoir	No	10	No	10	No	10	No	10	No	10	Yes	1	1	Wilderness
68	Dumphy Hollow	No	10	No	10	No	10	No	10	No	10	No	10	10	Not within special designated area
69	East Fork Reservoir	No	10	No	10	No	10	No	10	No	10	No	10	10	Not within special designated area
70	East Fork Gorge Reservoir	Yes	7	No	10	No	10	No	10	No	10	No	10	7	MA
71	East Fork No. 1	No	10	No	10	No	10	No	10	No	10	Yes	1	1	Wilderness
72	Feltner	No	10	No	10	No	10	No	10	No	10	No	10	10	Not within special designated area
73	Fremont Lake Enl.	No	10	No	10	No	10	No	10	No	10	No	10	10	Not within special designated area
74	Half Moon Lake Enl.	No	10	No	10	No	10	No	10	No	10	No	10	10	Not within special designated area
75	Lizzie Lozier	No	10	No	10	No	10	No	10	No	10	No	10	10	Not within special designated area
76	Lower New Fork 1	No	10	No	10	No	10	No	10	No	10	No	10	10	Not within special designated area
77	Lower New Fork 1A	No	10	No	10	No	10	No	10	No	10	No	10	10	Not within special designated area
78	Lower Willow Creek (2007)	No	10	No	10	No	10	No	10	No	10	No	10	10	Not within special designated area
79	Lower Willow Creek (2016) Footprint 1	No	10	No	10	No	10	No	10	No	10	No	10	10	Not within special designated area
80	Lower Willow Creek (2016) Footprint 2	No	10	No	10	No	10	No	10	No	10	No	10	10	Not within special designated area
81	Marm's Lake	No	10	No	10	No	10	No	10	No	10	Yes	1	1	Wilderness
82	New Fork Lake - Lower Intlet	No	10	No	10	No	10	No	10	No	10	No	10	10	Not within special designated area
83	New Fork Lake - Raise Dam	No	10	No	10	No	10	No	10	No	10	No	10	10	Not within special designated area
84	New Fork Lake - Riase Dam and Lower Inlet	No	10	No	10	No	10	No	10	No	10	No	10	10	Not within special designated area
85	New Fork Narrows	Yes	7	Yes	5	No	10	No	10	No	10	No	10	5	MA and SRMA
86	New Fork Off Channel	No	10	No	10	No	10	No	10	No	10	No	10	10	Not within special designated area
87	Pyramid Lake	No	10	No	10	No	10	No	10	No	10	Yes	1	1	Wilderness
88	Silver Lake	No	10	No	10	No	10	No	10	No	10	Yes	1	1	Wilderness
89	Silver Creek	Yes	7	Yes	5	No	10	No	10	No	10	No	10	5	MA, SRMA
90	Silver Creek - East Fork (Site 1)	No	10	No	10	No	10	No	10	No	10	No	10	10	Not within special designated area
91	Silver Creek - East Fork (Site 2)	Yes	7	No	10	No	10	No	10	No	10	No	10	7	MA
92	Silver/Spring Creeks Reservoir	Yes	7	No	10	No	10	No	10	No	10	No	10	7	MA
93	Willow Creek	No	10	No	10	No	10	No	10	No	10	No	10	10	Not within special designated area
94	Willow Lake - Lower Inlet	No	10	No	10	No	10	No	10	No	10	No	10	10	Not within special designated area
96	Site 1	Yes	7	Yes	5	No	10	No	10	No	10	No	10	5	MA, SRMA
97	Site 2	No	10	No	10	No	10	No	10	No	10	No	10	10	Not within special designated area
98	Site 3	Yes	7	No	10	No	10	No	10	No	10	No	10	7	MA
99	Site 4	Yes	7	No	10	No	10	No	10	No	10	No	10	7	MA
100	Site 5	No	10	No	10	No	10	No	10	No	10	No	10	10	Not within special designated area
101	Site 6	No	10	No	10	No	10	Yes	5	No	10	No	10	5	WHMA
102	Site 7	Yes	7	No	10	No	10	No	10	No	10	No	10	7	MA
103	Site 8	No	10	No	10	No	10	No	10	No	10	No	10	10	Not within special designated area
104	Site 9		FALSE		FALSE		FALSE		FALSE		FALSE		FALSE	0	No Data

ATTACHMENT D

PHOTOGRAPH

ATTACHMENT D - PHOTOGRAPH

Photograph 1: Elk feeding area located just west of the proposed embankment for Site 2. Photograph taken on the proposed centerline looking southwest.

Appendix P.
Reservoir Conceptual Design Discussion

This page is left intentionally blank.

DRAFT MEMORANDUM

Project 16123

TO: **Ron Steg – Tetra Tech, Inc.**

FROM: **Edwin Friend, P.E., P.G., PMP - RJH Consultants, Inc.**

DATE: **July 28, 2017**

RE: **New Fork River Watershed, Task 5**
Concept Memorandum

Introduction

The purpose of this memorandum is to present the conceptual-level design and recommendations for future studies for three preferred water storage sites within the New Fork River watershed. RJH consultants, Inc (RJH) completed the following scope of services:

- Prepared a conceptual-level design for dams at three preferred sites.
- Identified items that need to be resolved before project advancement.
- Prepared this memorandum.

As discussed within the Screening Memorandum prepared by RJH (RJH, 2017a), the three preferred alternatives selected for further evaluation were:

- Willow Lake – Lower Inlet
- Site 9
- Site 7

Site locations are shown on Figure 1.

Geological and Geotechnical Evaluations

Seismicity

The expected peak ground accelerations for three locations across the watershed are shown within the Geology, Aquifers, and Soils Summary Memorandum completed by RJH in February 2017 (RJH, 2017b). The maximum expected peak ground acceleration (PGA) from an event with a return interval of 5,000 years is approximately 0.64g and the minimum (PGA) is approximately 0.41g.

As discussed within the above-mentioned memorandum, one Quaternary fault, the Leckie Fault, was identified within the watershed by the U.S. Geological Survey (USGS) Quaternary Fault and Fold Database (USGS, 2006a).

Willow Lake

Willow Lake is a glacial lake with a small existing dam and outlet works structure. Based on construction drawings and USGS topography, the elevation (El.) of the existing dam crest is El. 7705.0 and the current permitted storage volume is 18,816 acre-feet (ac-ft) (Bayer, 1932). This alterative would replace the existing dam and lower the inlet by 2 feet to increase storage by about 3,600 ac-ft. The location of the site along with exposed geology is shown on Figure 2.

Based on published mapping, the surficial units at the site consist primarily of glacial deposits and debris of an unknown thickness, as shown on Figure 2 (Scott and Sutherland, 2009 and Love and Christianson, 1985). An explanation of exposed geologic units is provided on Figure 3. Bedrock was not mapped as exposed at the location of the proposed dam, but was mapped along the northeastern and southeastern reservoir rims as a granitic conglomerate of the Eocene-age (33.9 to 56 million years old) upper Wasatch Formation. Therefore, it was assumed bedrock underlying the proposed dam is of the same formation and is likely similar in material type to the exposed bedrock. Although the site consists of primarily surficial materials, minimal seepage has been observed at the existing structure. Because the concept for Willow Lake is to lower the inlet without increasing the water surface elevation, a minimal change in seepage is expected.

Two thrust faults, trending northwest to southeast, run through the western and eastern edges of the reservoir footprint, as shown on Figure 2. The approximate age of these faults is unknown, although they were understood to be older than Quaternary-age because they were not identified by the USGS Quaternary Fault and Fold Database (USGS, 2006a).

Technical conditions that have the potential to have the greatest impact on design are:

- The need for and extent of foundation treatment is not known at this time.

Site 9

The proposed dam for Site 9 would be located on the Big Sandy River outside of the New Fork River watershed. The location of the site along with exposed geology is shown on Figure 4. Based on published mapping, the surficial units at the site consist of alluvium within the valley bottom with residuum and glacial debris on the valley slopes (Scott and Sutherland, 2009 and Wittke, 2010). Thicknesses of surficial materials overlying bedrock are unknown.

According to Scott and Sutherland (2009), bedrock below the dam and reservoir are located on igneous intrusive rock of the Precambrian-age (541 to 4000 million years old) Bears Ears pluton, which is composed of very solid grano-diorite, which was observed at the site to be slightly to moderately fractured and jointed, as shown in Photograph 1 in Attachment A. Two primary joint sets were observed during a site visit on June 13, 2017. The site visited was about 3,000 feet west (downstream) of the dam site. Based on published mapping and aerial photography, the geology at the dam site is likely similar to observed geology. The primary joint set was oriented northeast to southwest and was near vertical with spacing between 2 to 10 feet. The secondary joint set was oriented north to south, dipping 45 degrees southeast. The joints and fractures were often observed to be open to moderately open. Therefore, foundation and abutment grouting will likely be necessary.

One Quaternary fault, the Leckie Fault, extends through the eastern tip of the reservoir, Figure 4. This fault was identified by the USGS Quaternary Fault and Fold Database (USGS, 2006a) as active within the past 1.6 million years and is a northwest-southeast

trending normal fault which runs along the western margin of the Wind River uplift (USGS, 2006b). The activity of this fault should be evaluated in further phase of design.

Conditions that have the potential to have the greatest impact on design are:

- The need for and extent of foundation treatment is not known at this time.
- The activity and potential ground motions from the Leckie Fault.

Additionally, Site 9 is located outside of the New Fork River watershed, southeast of Muddy Creek. Therefore, a water delivery canal would be necessary for this site to be viable. Currently, there is an abandoned canal located approximately 3,000 feet downstream of the proposed embankment, which could be utilized but would require some repairs and lining of sections of the canal, as shown on Figure 5 and in Photograph 2 of Attachment A. This canal extends to Muddy Creek which is located within the New Fork River watershed. The approximate length of canal that would require rehabilitation is 10.6 miles.

Site 7

The proposed dam for Site 7 would be located on a drainage north of the East Fork River within the New Fork River watershed. The location of the site and exposed geology is shown on Figure 6. Based on published mapping, the surficial units at the site consist primarily of alluvium throughout the reservoir footprint with glacial debris along the southern reservoir rim (Scott and Sutherland, 2009). Bedrock was not mapped as exposed at the location of the proposed dam, but was mapped east of the site as igneous intrusive rock of the Precambrian-age Bears Ears Pluton. The site may be underlain by the same formation. Thicknesses of surficial materials overlying bedrock are unknown.

Church Reservoir, located northeast of Site 7, was previously identified within the New Fork River watershed as a potential reservoir site by States West Water Resources Corporation (States West) for the Wyoming Water Development Commission (WWDO) (States West, 2002). As part of the evaluation, States West conducted a preliminary geotechnical investigation and completed a concept design for the proposed site. Since the proposed location for Site 7 is downstream of the proposed Church Reservoir, it is assumed the surficial materials and bedrock units at Site 7 would be similar to those identified at the Church Reservoir site.

Conditions that have the potential to have the greatest impact on design are:

- The need for and extent of foundation treatment is not known at this time.
- Depths to competent bedrock are unknown; therefore, construction of adequate seepage barrier below the dam may be difficult or costly.

Site 7 is not located on a major drainage; therefore, a supply canal diverting water from the East Fork River or Jim Creek would be necessary to supply the reservoir. The Church Reservoir evaluation recommended a diversion canal sourced from Jim Creek with a canal length of approximately 4,600 feet, as shown on Figure 7. It is likely Site 7 will also require water diversion from Jim Creek.

Concept Level Designs

Based on the data collected from our screening evaluation and RJH's experience as geotechnical and dam engineers, we developed conceptual design concepts for a dam at the three preferred sites.

These concepts were developed without the benefit of site-specific geotechnical data and engineering analyses, and are based primarily on our experience and judgement. Changes to these concepts should be anticipated after site-specific geotechnical and geological data are collected and completion of preliminary engineering analyses. A summary of dam heights and crest widths for the proposed alternatives is shown on Table 3.1.

The concept design for Site 7 was evaluated using information from the concept design at the nearby Church Reservoir. Conceptual design drawings for Site 7 were not created because the design was assumed to be similar to the proposed design for Church Reservoir. Differences between the design concepts for Site 7 and Church Reservoir are discussed below. Conceptual design drawings for Church Reservoir can be found in Attachment B.

TABLE 3.1
SUMMARY OF DAM HEIGHTS AND CREST WIDTHS

Site	Dam	Dam Height (ft)	Crest Elevation (ft)	Crest Width (ft)	Crest Length (ft)	Normal Reservoir Pool Elevation (ft)
Willow Lake	Main	24	7713	20 (1)	190	7705
Site 9	Main	120	7526	25	315	7521
Site 7	Main	109	8005	26	820	8000
	Saddle 1	38		12	590	

Note:
1. Crest width widened to accommodate access road.

Willow Lake

The existing dam is not capable of passing the design flood event and also, does not include modern dam safety features based on a review of the original design drawings. Therefore, the existing dam likely needs to be completely removed and replaced with a new dam downstream. The existing dam would remain in place during construction and would perform as a cofferdam during construction. The existing dam would be removed after construction of the new dam.

The existing users of Willow Lake have limited need this time based on the STATEMOD model prepared by Wenck and Associates, Inc. in 2016 (RJH, 2017c). It would likely be required that additional participants be added to the project to justify the need of the additional storage.

An appropriate dam type for Willow Lake would be a homogenous earthfill embankment for the following reasons:

- The existing dam is an earthfill embankment with an upstream zone composed of earthfill and a downstream zone composed of rock fill, as shown in Attachment C.
- Borrow sources with adequate quantities of low-permeability soil and filter sand, which are required for an earthfill dam, appear to be present near the site.

We evaluated a concept that would provide approximately 3,600 ac-ft of additional storage at Willow Lake by lowering the inlet 2 feet. The evaluated elevations and dimensions for the proposed dam are provide in Table 3.1.

A plan and oblique view of the dam site is presented on Figures 8 and 9. A typical dam section through the centerline of the outlet works is shown on Figure 10. A dam profile displaying the outlet works and a cross section of the spillway are shown on Figure 11. For this level of design, we used a crest width of 20 feet to allow vehicle access on the dam crest and selected a 3 horizontal to 1 vertical (H:V) slope for both the upstream and downstream slopes. If access across the dam is needed, a bridge would be required. The dam height includes 8 feet of freeboard above normal pool to route the probable maximum flood (PMF) with 1 foot of residual freeboard. Wave run-up calculations were not performed as part of this design.

Foundation preparation would consist of excavating a 12-foot-wide cutoff trench below the embankment that would extend about 5 feet below existing ground. Upstream slope protection would consist of 2 feet of riprap over 1 foot of bedding, placed from the toe to the crest of the embankment.

A chimney drain connected to a blanket drain would be included downstream of the embankment centerline and the cutoff trench to manage seepage through the embankment and provide protection against internal erosion. The chimney drain would be vertical and would consist primarily of sand. The blanket drain would likely consist of a layer of fine gravel with a layer of sand above and below the gravel. Seepage collected in the chimney and blanket drain would be discharged to the downstream toe of the embankment using PVC pipes.

The spillway would be constructed near the right abutment and would be 75 feet long. The new embankment would need to be 2 feet higher than the existing embankment in order to pass the PMF with 1 foot of residual freeboard. The outlet works would be located below the embankment abutment adjacent to the spillway. An inlet channel would be excavated from the existing stream channel to the upstream inlet for the outlet works. Inlet channel excavation may need to extend further east to access water storage in the lake.

Site 9

At this it is unknown if there is sufficient water within the Big Sandy River basin to support a new dam. Based on preliminary evaluations for enlarging the Big Sandy Reservoir, there was only sufficient water supply in 12 out of 20 years (personnel communication with WWDO Staff) to fill the enlargement of the reservoir. Before Site 9 is advanced further, hydrologic evaluations should be performed on the basin to confirm water availability.

An appropriate dam type for Site 9 would be a roller compacted concrete (RCC) dam. An RCC dam was selected for the following reasons:

- The bedrock foundation was assumed to have adequate strength to support a RCC dam.
- RCC dams are typically cost competitive for sites with high strength bedrock and narrow valleys.
- The entire dam would be used as a spillway to pass extreme flood events.
- An existing sand and gravel quarry located approximately three miles from the mouth of the canyon, which may be able to provide concrete aggregate.

We evaluated a RCC dam that would provide approximately 5,000 ac-ft of storage at Site 9. The evaluated elevations and dimensions for the proposed dam are provided in Table 3.1.

A plan and oblique view of the dam site is presented on Figures 12 and 13. A typical dam section near the maximum dam height is shown on Figure 14. For this level of design, we used a crest width of 25 feet wide, a vertical upstream slope, a 0.7H:1V downstream slope, and an upstream conventional concrete facing for seepage control. The remainder of the dam would be RCC.

Foundation preparation would consist of clearing and grubbing trees, excavating surficial soils, talus, and intensely fractured and weathered bedrock to acceptable bedrock. We have assumed a 5-foot-thick layer of leveling concrete (conventional concrete) would be required at the contact between the prepared foundation and the RCC. Additionally, grouting of the abutments will likely be necessary.

Because subsurface explorations were not performed and open to moderately wide joints were observed in exposed slopes during field mapping, we have included a grout curtain for the entire length of the dam. Abutment grouting will also be necessary to decrease the potential for seepage. For the grout curtain, the following was assumed:

- A triple row of grout holes split spaced every 10 feet.
- The grout curtain would extend a minimum of 30 feet and a maximum of 200 feet below the top of bedrock.

Seepage control in the dam would include 3-inch-diameter drain holes spaced 10 feet apart through the dam that would be angled between 30 and 45 degrees from vertical along the dam axis. Foundation drain holes would also be 3 inches in diameter, would be spaced every 10 feet, and would extend to a depth of about 75 percent of the adjacent grout curtain. The foundation drain holes would be orientated to intersect the bedrock structure. The drain holes would discharge into a 10-foot by 8-foot gallery that would extent through the dam and likely into both abutments. The collected gallery would discharge into an access adit located near the valley bottom.

Site 7

Based on the screening evaluation (RJH, 2017a), Site 7 and Church Reservoir had similar scores and are adjacent. This memo will present the engineering differences between the two sites. If Site 7 if considered for advancement, it should be reevaluated in more detail when compared to Church Reservoir and identify if items that preclude development of Church Reservoir exist at Site 7.

Based on the conceptual design for the nearby Church reservoir, an appropriate dam type at Site 7 would be a zoned earthfill dam. A zoned embankment was chosen for the Church Reservoir site based on the presence of adequate low-permeable soils for the core and sandy materials for the shell at the dam site. Based on published geology, Site 7 appears to have similar surficial materials to the Church Reservoir site and therefore, it is assumed that Site 7 also contains adequate low-permeable and sandy materials.

The proposed concept for the Church Reservoir site was evaluated for an 85-foo- tall and 800-foot-long earthfill dam that would provide approximately 6,000 ac-ft of storage with a 90 percent firm yield of 4,250 ac-ft. For Site 7, an earthfill dam that would provide approximately 5,000 ac-ft of storage was evaluated. Based on preliminary assessments, Site 7 would require one main dam and one saddle dam to reach the required storage. The evaluated elevations and dimensions for the proposed dam are provide in Table 3.1.

Conceptual design drawings for the proposed Church Reservoir are provided within Attachment B. The proposed main embankment design for Site 7 would be similar the

design for Church Reservoir, shown on Sheet 4 of Attachment B, but would differ in dam height, crest length, and crest width. The crest width for Site 7 was calculated according to the Wyoming State Engineers Office (WYSEO), Rules and Regulations as approximately 26 feet, which is the maximum crest width required by the WYSEO. The dam height for this site includes 5 feet of freeboard above maximum normal pool; however, wave run-up calculations have not been performed as part of design. The volume of material needed for the proposed Site 7 embankments would be about 33 percent more than the volume proposed for Church Reservoir, Attachment B.

Recommended foundation preparation at the Church Reservoir site consisted of pressure grouting of the bedrock foundation and excavation of alluvial materials and weathered bedrock in order to construct of a keyway trench 2 feet into competent bedrock. Similar foundation treatment methods are assumed to be required at Site 7, but geotechnical investigations will be needed to further evaluate the permeability of the bedrock.

Two feet of riprap for the upstream slope was recommended for Church Reservoir and therefore should be included in the design concept for Site 7. Additionally, the design for Church Reservoir included an inclined chimney drain and blanket drain, which would also be required at Site 7 that would be composed of sands and gravel from the proposed reservoir area.

The spillway at Site 7 would likely be excavated through the right abutment where bedrock is likely shallow. The outlet works would likely be constructed through the embankment maximum section.

Future Study

The following tasks should be completed during the next phase of study for the selected alternative to be advanced:

1. Select the preferred reservoir site. Outstanding considerations include:
    a. Confirm the need for additional water storage in Willow Lake.
    b. Identify if sufficient water supply is available in the Big Sandy River to fill a reservoir at Site 9.
    c. Identify if the Leckie Fault is active and identify associated impacts to project development.
    d. Evaluate if Site 7 is preferred over Church Reservoir.
2. Obtain site-specific detailed topography for the selected reservoir, dam site, and surrounding area. This is required to provide an adequate base map for preliminary design-level geologic mapping and engineering evaluations.
3. Perform site-specific geologic mapping of the dam and reservoir sites should be performed to identify and characterize the geologic units and any geologic hazards that may be present and to identify possible borrow sources.
4. Perform subsurface investigations including the following items:
    a. Excavating test pits within the dam footprint and borrow areas to investigate shallow subsurface structure and collect bulk samples for laboratory testing, to evaluate if clayey materials are suitable embankment earthfill, and if terrace deposits are suitable for drainage and riprap bedding materials.
    b. Advance borings within the dam footprint to: 1) investigate depths deeper than can be obtained from test pits, 2) collect undisturbed samples of surficial

materials and bedrock, and 3) collect geotechnical data that is only obtainable from drilling methods (i.e., standard penetration tests (SPT) and bedrock rock quality designation (RQD)).

c. Perform packer permeability tests in bedrock within the borings to estimate the hydraulic conductivity of the bedrock, which can be used to approximate reservoir seepage losses and identify foundation treatment requirements.

d. Perform falling head or constant head test in the surficial materials foundation to estimate reservoir seepage losses and foundation treatment requirements.

5. Perform laboratory tests on soil and bedrock samples collected during the subsurface investigation to identify index, strength, durability, and dispersion properties of the foundation and available borrow materials and in particular, the residual strength of the bedrock.

6. Identify borrow sources and estimate borrow quantities based on the findings of the geologic mapping, subsurface investigation, and laboratory testing.

7. For RCC dams, the following analyses should be performed:

   a. Kinematic analyses to evaluate foundation and abutment stability.

   b. Stability calculations based on topography and geologic properties.

   c. Foundation deformation analyses to identify foundation improvements and stresses in the dam.

   d. Adjust concepts for foundation grouting and drainage based on updated bedrock properties.

8. Refine the internal embankment geometry presented in this report, as necessary, based on the available borrow material identified during the subsurface investigation and laboratory testing.

9. Develop material properties for the foundation and embankment fill materials based on the results of laboratory testing and published correlations for similar materials.

10. Perform static slope stability analyses for the maximum earthfill embankment sections using material properties developed from laboratory testing to update the preliminary embankment configuration provided in this memorandum.

11. Perform seismic deformation analyses to estimate the permanent embankment crest deformation that would result from the design peak ground acceleration. The embankment freeboard presented in this report should be refined, as necessary, to provide adequate residual freeboard.

12. Perform seepage analyses to evaluate foundation conditions and revise the concept and depth of the grout curtains.

13. Perform preliminary geotechnical evaluations for other ancillary facilities.

14. Perform hydrologic, hydraulic, and structural calculations to revise hydraulic structures designs.

References

Bayer, W. (1932). Map to Accompany Application for Enlargement. Permit P4475.0R, Pinedale, Wyoming.

Love, J.D. and Christianson, A.C. (Love and Christianson) (1985). Geologic Map of Wyoming, US Geological Survey, scale 1:500,000.

RJH Consultants, Inc. (RJH) (2017a). *New Fork River Level I Watershed Study: Screening Memorandum*, July.

RJH Consultants, Inc. (RJH) (2017b). *New Fork River Watershed – Geology, Aquifers, and Soils Summary Memorandum*, February.

RJH Consultants, Inc. (RJH, 2017c). *Feasibility Study Report, New Fork Lake Dam Enlargement, Level II, Phase I Study*, April.

Scott, J.E. and Sutherland, W.M. (Scott and Sutherland) (2009). Preliminary Geologic Map of the Pinedale 30' x 60' Quadrangle, Sublette and Fremont Counties. Wyoming, Wyoming State Geological Survey Open File Report 09-5, 1 sheet, scale 1:100,000.

States West Water Resources Corporation (States West) (2002). *Final Report for the Green River ASR and Alternative Storage Project – Church Reservoir Investigation*. Wyoming Water Development Commission.

Wittke, S.J. (2010). Surficial Geologic Map of the Pinedale 30' x 60' Quadrangle, Sublette and Fremont Counties, Wyoming. Wyoming State Geological Survey Map Series 100, scale 1:100,000

U.S. Geological Survey (USGS) (2006a). Quaternary Fault and Fold Database for the United States, accessed 12-08-2016 from USGS web site https://earthquakes.usgs.gov/regional/qfaults

U.S. Geological Survey (USGS) (2006b). Quaternary Fault and Fold Database for the United States – Leckie Fault, accessed 12-08-2016 from USGS web site https://geohazards.usgs.gov/cfusion/qfault/show_report_AB.cfm?fault_id=775&section_id

Attachments: Figure 1 – Preferred Three Alternative Sites
Figure 2 – Willow Lake Exposed Geology
Figure 3 – Exposed Geology Explanation
Figure 4 – Site 9 Exposed Geology
Figure 5 – Site 9 Supply Canal
Figure 6 – Site 7 and Church Reservoir Exposed Geology
Figure 7 – Site 7 and Church Reservoir Supply Canal
Figure 8 – Plan of Willow Lake Site
Figure 9 – Willow Lake Oblique View
Figure 10 – Willow Lake Lower Inlet Outlet Works and Embankment Sections
Figure 11 – Willow Lake Lower Inlet Profile and Spillway Section
Figure 12 – Plan of Site 9
Figure 13 – Site 9 Oblique View
Figure 14 – Site 9 Typical Maximum Section
Attachment A – Photographs
Attachment B – Church Reservoir Conceptual Design Drawings and Cost Estimate
Attachment C – Willow Lake Construction Permit

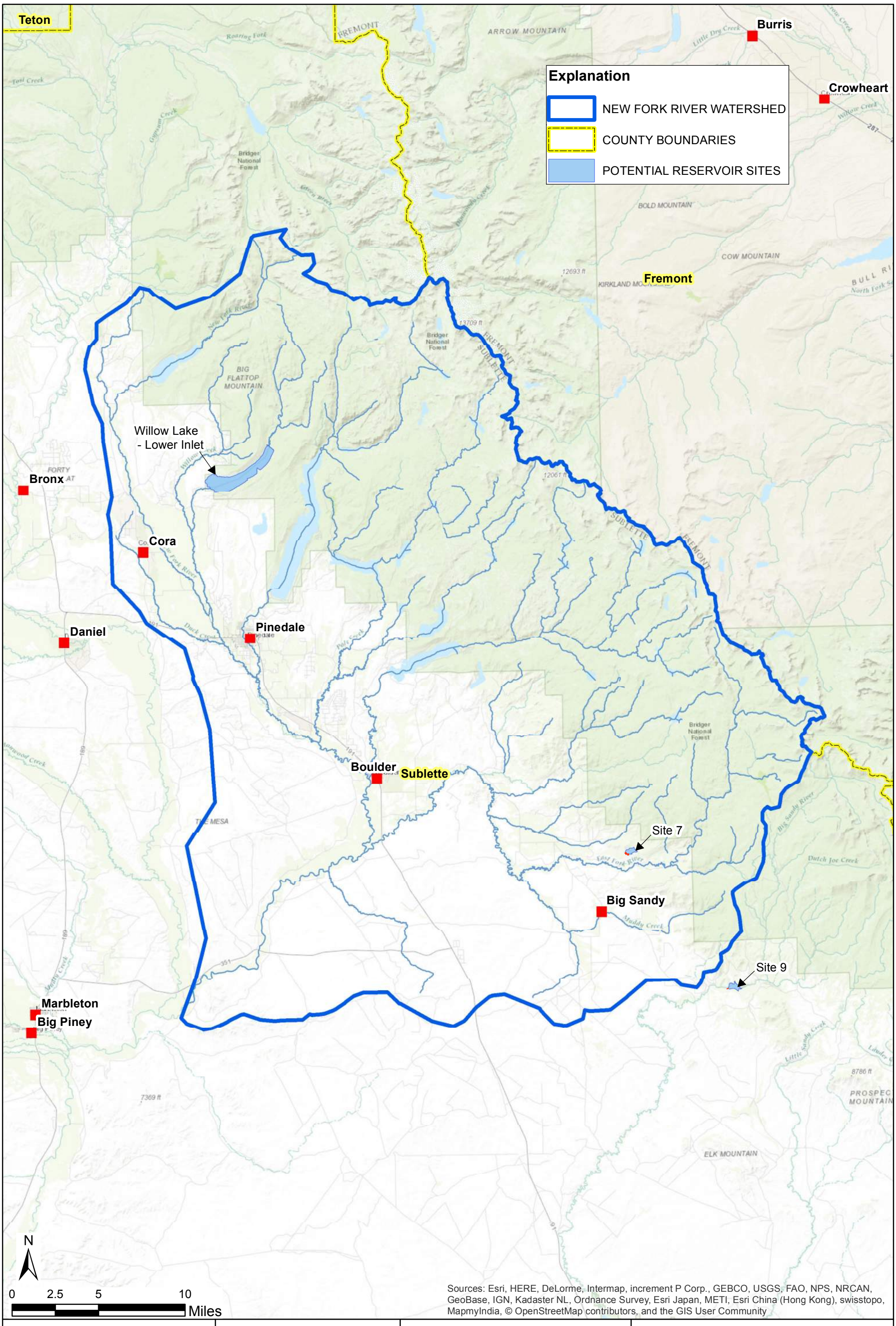

P:\16123 - New Fork Level 1\Engineering\1005_storage\GIS\Figure 1_Preferred Three Sites.mxd

THIS DOCUMENT MUST BE REPRODUCED IN COLOR

Porjection: NAD 83 - UTM 12N

RJH CONSULTANTS, INC.

NEW FORK RIVER LEVEL 1 WATERSHED STUDY

PREFERRED THREE ALTERNATIVE SITES

PROJECT NUMBER 16123

July 2017

Figure 1

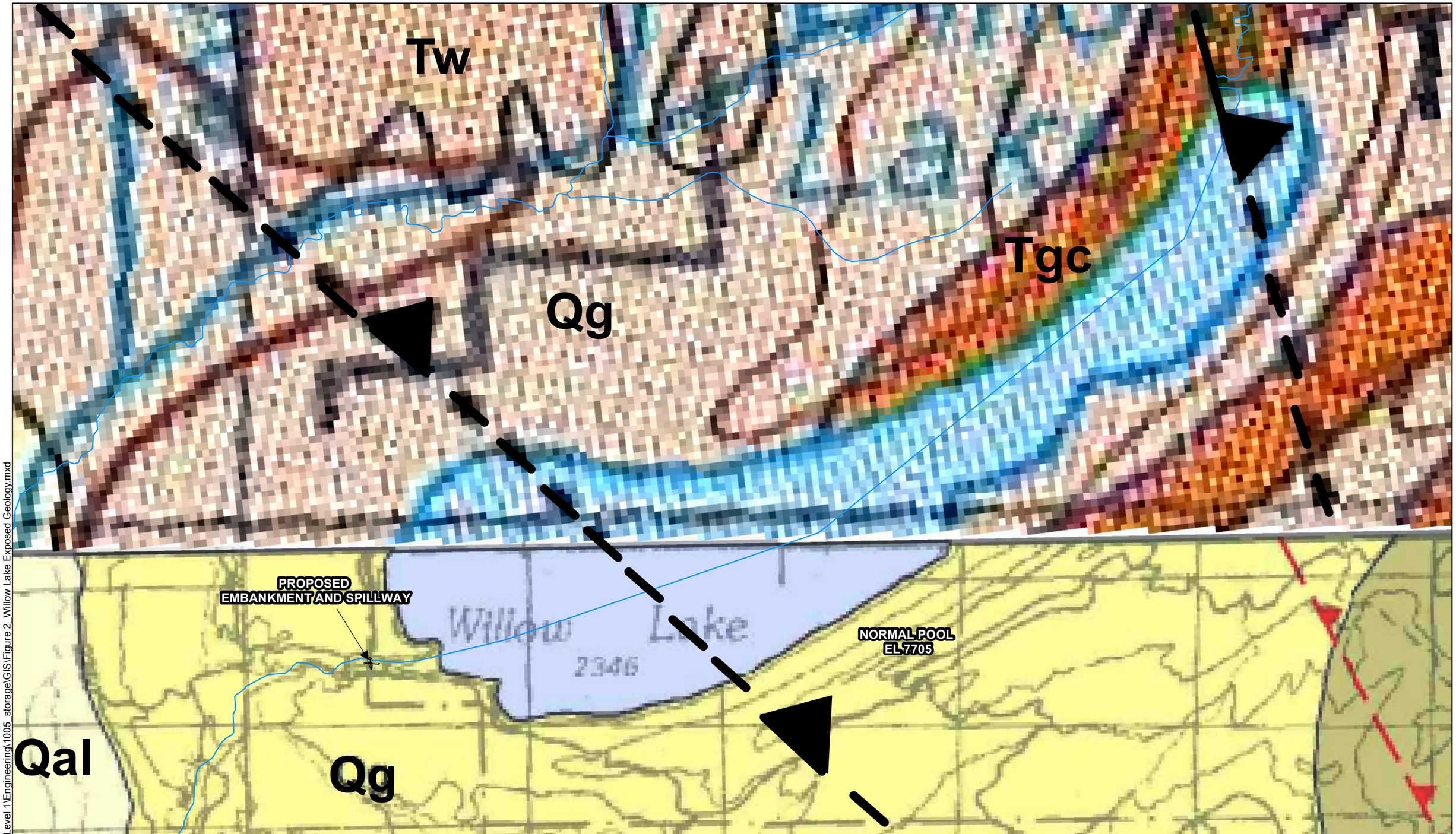

NOTE:
1. EXPLANATION ON FIGURE 3.

THIS DOCUMENT MUST BE REPRODUCED IN COLOR

N

0 1,000 2,000 4,000 Feet

RJH CONSULTANTS, INC.

NEW FORK RIVER LEVEL 1 WATERSHED STUDY

PROJECT NUMBER 16123

WILLOW LAKE EXPOSED GEOLOGY

July 2017

Figure 2

P:\16123 - New Fork Level 1\Engineering\1005_storage\GIS\Figure 2_Willow Lake Exposed Geology.mxd

Explanation

Map Symbol		Description	Age
Love and Christiansen (1985)	Scott and Sutherland (2009)		
	Qal	Alluvium	Holocene and Pleistocene
Qg		Glacial deposits	Holocene and Pleistocene
	Qg	Glacial debris	Pleistocene
Tgc		Granitic conglomerate above or in upper part of Wasatch Formation	Eocene
Tw		Wasatch Formation	Eocene
	Wbe	Bears Ears pluton	Precambrian
	Wgs	Gneissic supracrustal rocks	Precambrian

Map Symbol		Description
Love and Christiansen (1985)	Scott and Sutherland (2009)	
		Contact
		Fault - dotted where concealed, bar and ball on downthrown side
		Thrust Fault - dotted where concealed, sawteeth on upper plate

RJH CONSULTANTS, INC.

NEW FORK RIVER LEVEL 1 WATERSHED STUDY

EXPOSED GEOLOGY EXPLANATION

PROJECT NUMBER 16123

July 2017

Figure 3

\\RJHSEDGE14\PROJECTS\16123 - NEW FORK LEVEL 1\ENGINEERING\1005 STORAGE\MEMORANDUMS\CONCEPT MEMORANDUM\FIGURES\CAD\FIGURE 3 EXPOSED GEOLOGY EXPLANATION.DWG 7/25/2017 4:08 PM

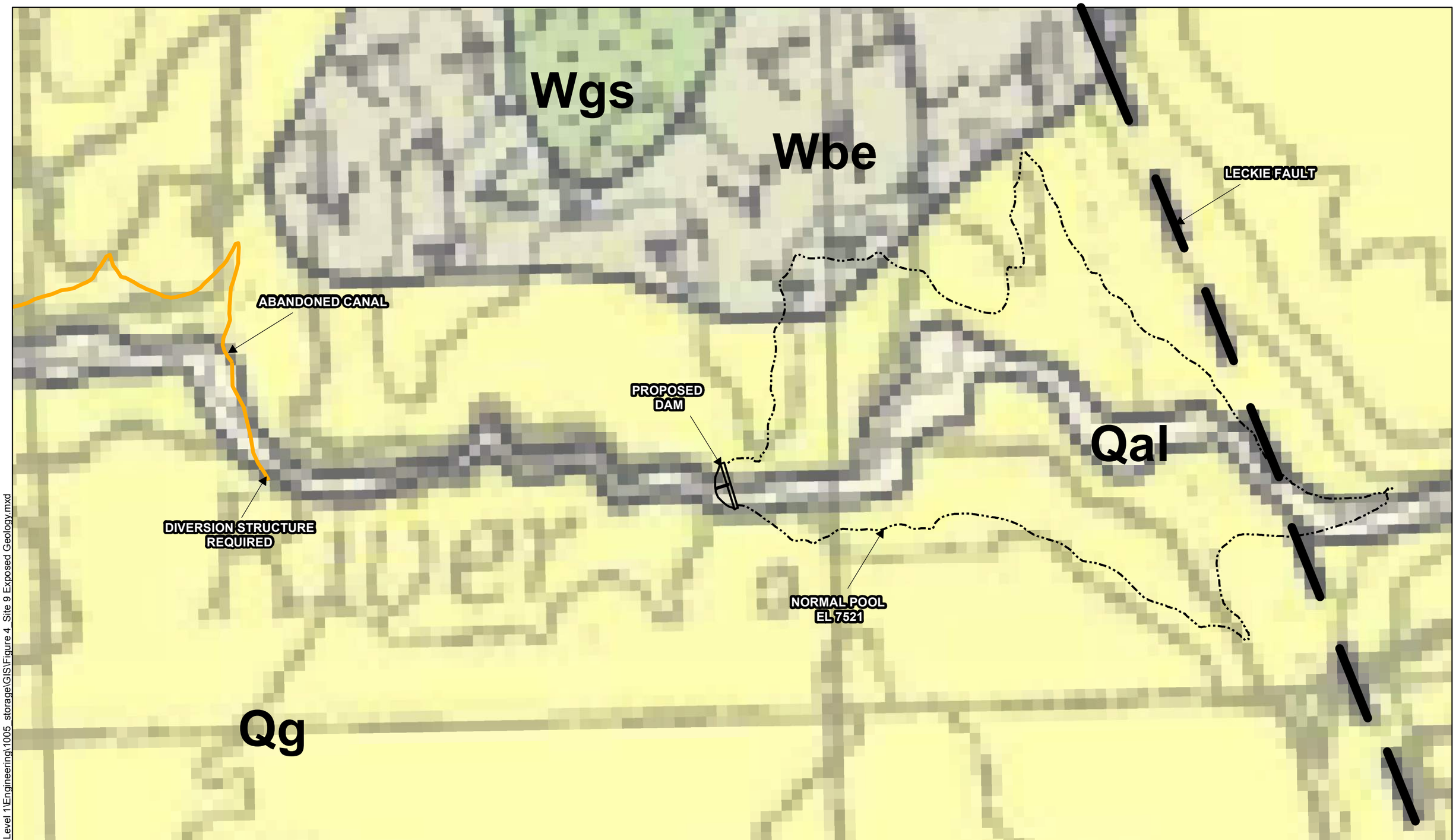

NOTE:
1. EXPLANATION ON FIGURE 3.

THIS DOCUMENT MUST BE REPRODUCED IN COLOR

N

0 300 600 1,200 Feet

RJH CONSULTANTS, INC.

NEW FORK RIVER LEVEL 1 WATERSHED STUDY

SITE 9 EXPOSED GEOLOGY

PROJECT NUMBER 16123

July 2017

Figure 4

P:\16123 - New Fork Level 1\Engineering\1005 storage\GIS\Figure 4 Site 9 Exposed Geology.mxd

P:\16123 - New Fork Level 1\Engineering\1005_storage\GIS\Figure 5_Site 9 Supply Canal.mxd

THIS DOCUMENT MUST BE REPRODUCED IN COLOR

N

0 1,500 3,000 6,000 Feet

RJH CONSULTANTS, INC.

NEW FORK RIVER LEVEL 1 WATERSHED STUDY

SITE 9 SUPPLY CANAL

PROJECT NUMBER 16123

July 2017

Figure 5

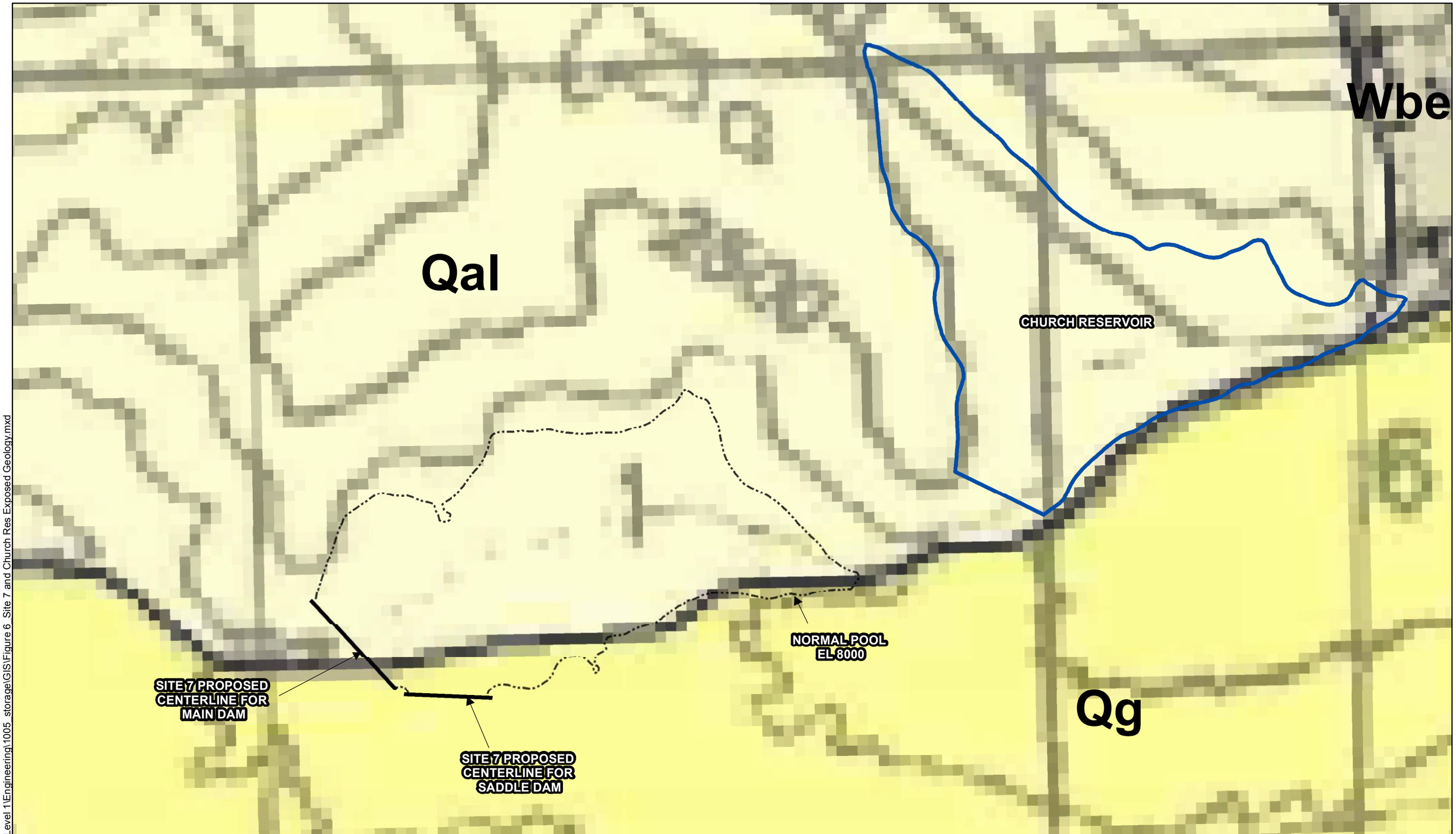

NOTE:
1. EXPLANATION ON FIGURE 3.

THIS DOCUMENT MUST
BE REPRODUCED IN COLOR

N

0 300 600 1,200
Feet

RJH CONSULTANTS, INC.

NEW FORK RIVER LEVEL 1
WATERSHED STUDY

SITE 7 AND
CHURCH RESERVOIR
EXPOSED GEOLOGY

PROJECT NUMBER 16123

July 2017

Figure 6

P:\16123 - New Fork Level 1\Engineering\1005_storage\GIS\Figure 6_Site 7 and Church Res Exposed Geology.mxd

P:\16123 - New Fork Level 1\Engineering\1005_storage\GIS\Figure 7_Site 7 and Church Res Supply Canal.mxd

THIS DOCUMENT MUST
BE REPRODUCED IN COLOR

N

0 500 1,000 2,000
Feet

RJH CONSULTANTS, INC.

NEW FORK RIVER LEVEL 1
WATERSHED STUDY

SITE 7 AND
CHURCH RESERVOIR
SUPPLY CANAL

PROJECT NUMBER 16123

July 2017

Figure 7

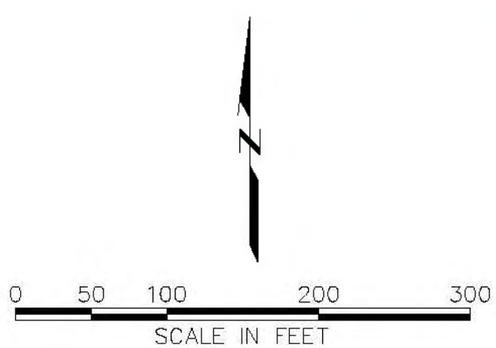

NOTES:

1. TOPOGRAPHIC CONTOURS ARE FROM INFRAWORKS BY AUTODESK.
2. DATUM IS WYOMING STATE PLANE WY83–WF.
3. CONTOUR INTERVAL IS 10 FEET.

	RJH CONSULTANTS, INC.	NEW FORK RIVER LEVEL 1 WATERSHED STUDY	PLAN OF WILLOW LAKE SITE
		PROJECT NO. 16123	July 2017 Figure 8

P:\16123 – NEW FORK LEVEL 1\CAD\INFRAWORKS\WILLOW LAKE.DWG 7/28/2017 9:44 AM

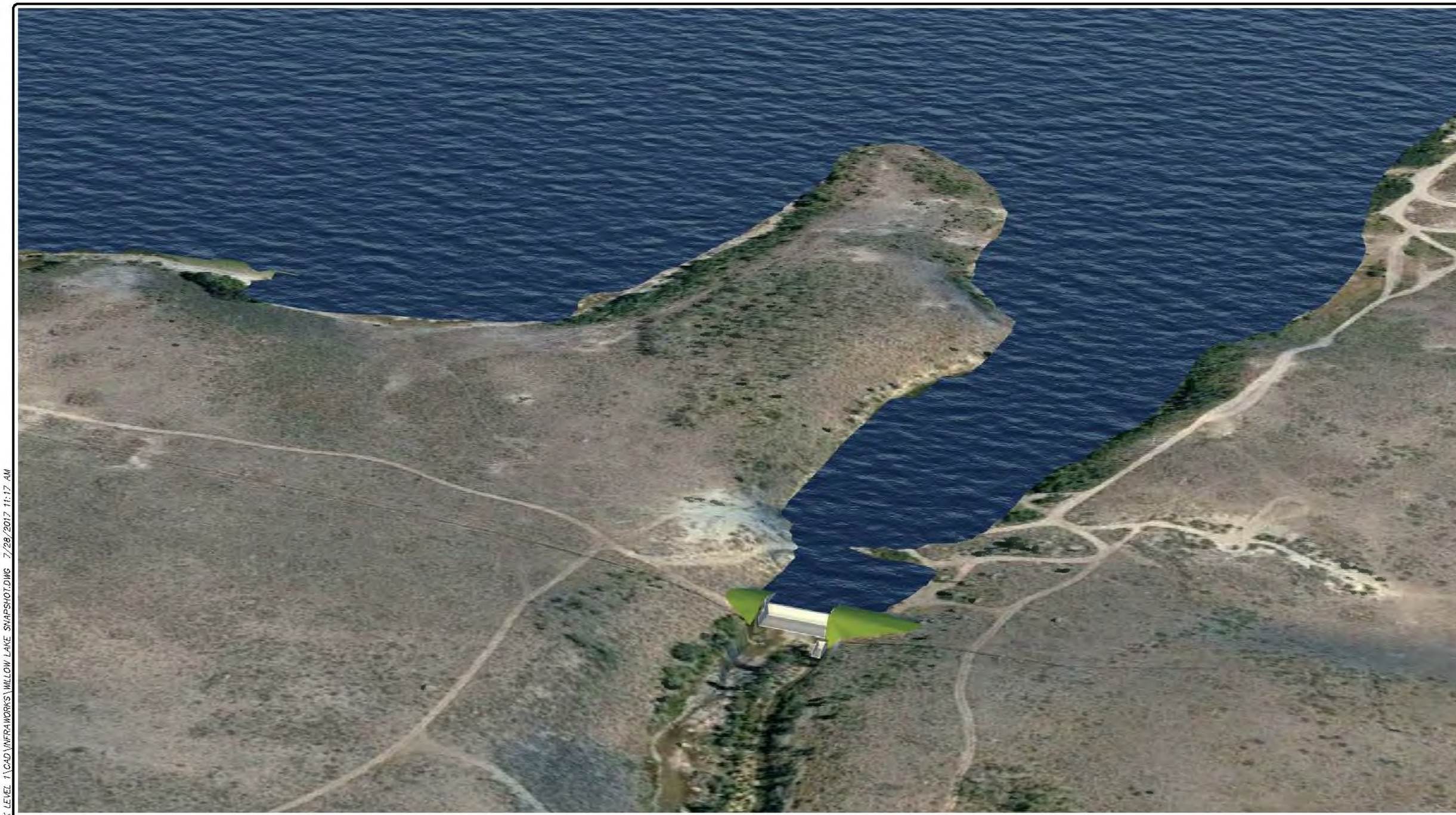

RJH CONSULTANTS, INC.	NEW FORK RIVER LEVEL 1 WATERSHED STUDY	WILLOW LAKE OBLIQUE VIEW	
	PROJECT NO. 16123	July 2017	Figure 9

P:\16123 – NEW FORK LEVEL 1\CAD\INFRAWORKS\WILLOW LAKE SNAPSHOT.DWG 7/28/2017 11:17 AM

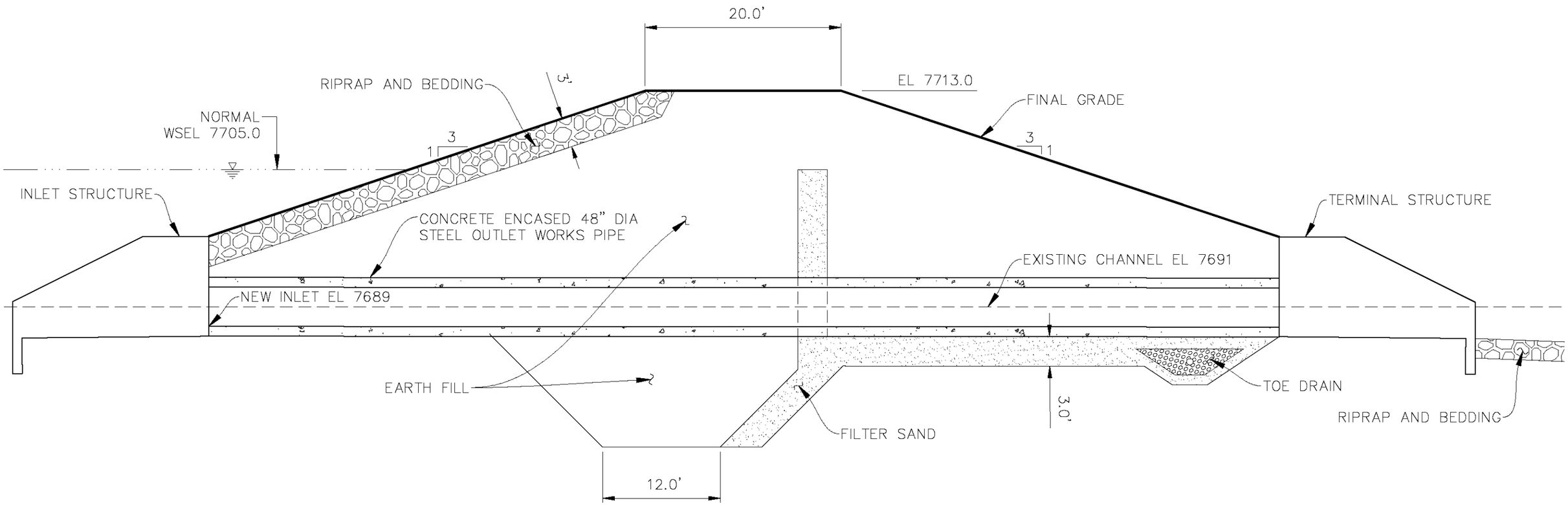

SECTION 1/8

0 5 10 20 30

SCALE IN FEET

NOTES:

1. EXISTING GRADE BASED ON CONTOURS FROM INFRAWORKS BY AUTODESK.

RJH CONSULTANTS, INC.

NEW FORK RIVER LEVEL 1 WATERSHED STUDY	WILLOW LAKE LOWER INLET OUTLET WORKS AND EMBANKMENT SECTION
PROJECT NO. 16123	July 2017 — Figure 10

P:\16123 – NEW FORK LEVEL 1\CAD\INFRAWORKS\WILLOW LAKE.DWG 7/28/2017 9:46 AM

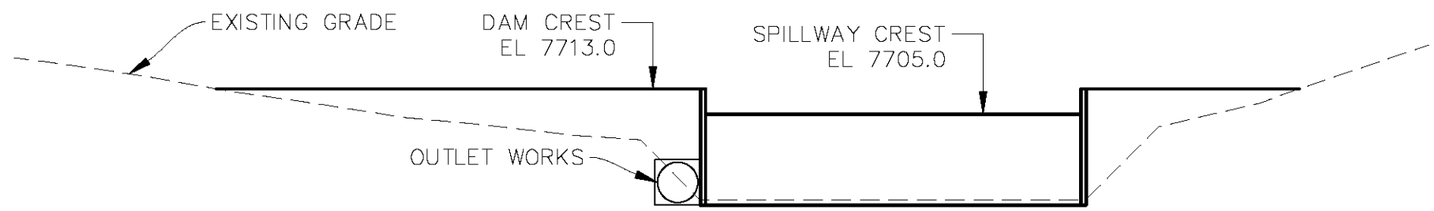

SECTION 3/8

0 15 30 60 90

SCALE IN FEET

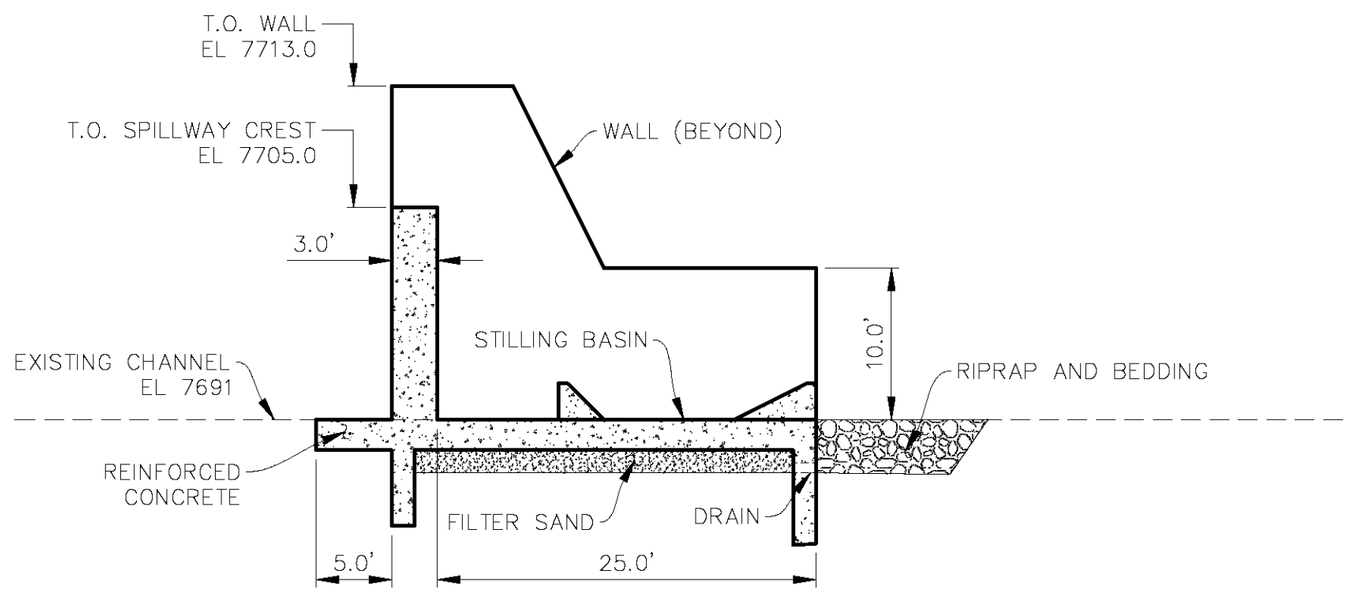

SECTION 2/8

0 5 10 20 30

SCALE IN FEET

NOTES:

1. EXISTING GRADE BASED ON CONTOURS FROM INFRAWORKS BY AUTODESK.

RJH CONSULTANTS, INC.

NEW FORK RIVER LEVEL 1 WATERSHED STUDY	WILLOW LAKE LOWER INLET SECTIONS
PROJECT NO. 16123	July 2017 — Figure 11

P:\16123 – NEW FORK LEVEL 1\CAD\INFRAWORKS\WILLOW LAKE.DWG 7/28/2017 9:47 AM

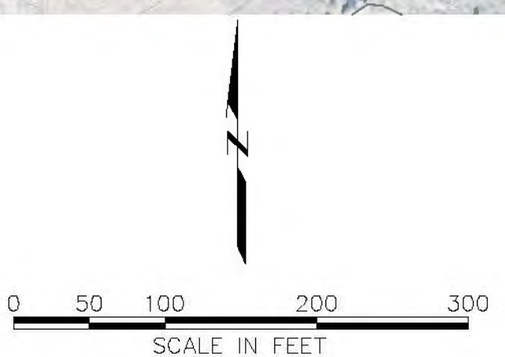

NOTES:

1. TOPOGRAPHIC CONTOURS ARE FROM INFRAWORKS BY AUTODESK.
2. DATUM IS WYOMING STATE PLANE WY83-WF.
3. CONTOUR INTERVAL IS 10 FEET.

RJH CONSULTANTS, INC.

NEW FORK RIVER LEVEL 1 WATERSHED STUDY

PLAN OF SITE 9

PROJECT NO. 16123

July 2017

Figure 12

P:\16123 - NEW FORK LEVEL 1\CAD\INFRAWORKS\SITE 9.DWG 7/28/2017 9:50 AM

RJH CONSULTANTS, INC.	NEW FORK RIVER LEVEL 1 WATERSHED STUDY	SITE 9 OBLIQUE VIEW	
	PROJECT NO. 16123	July 2017	Figure 13

P:\16123 – NEW FORK LEVEL 1\CAD\INFRAWORKS\SITE 9 SNAPSHOT.DWG 7/28/2017 10:00 AM

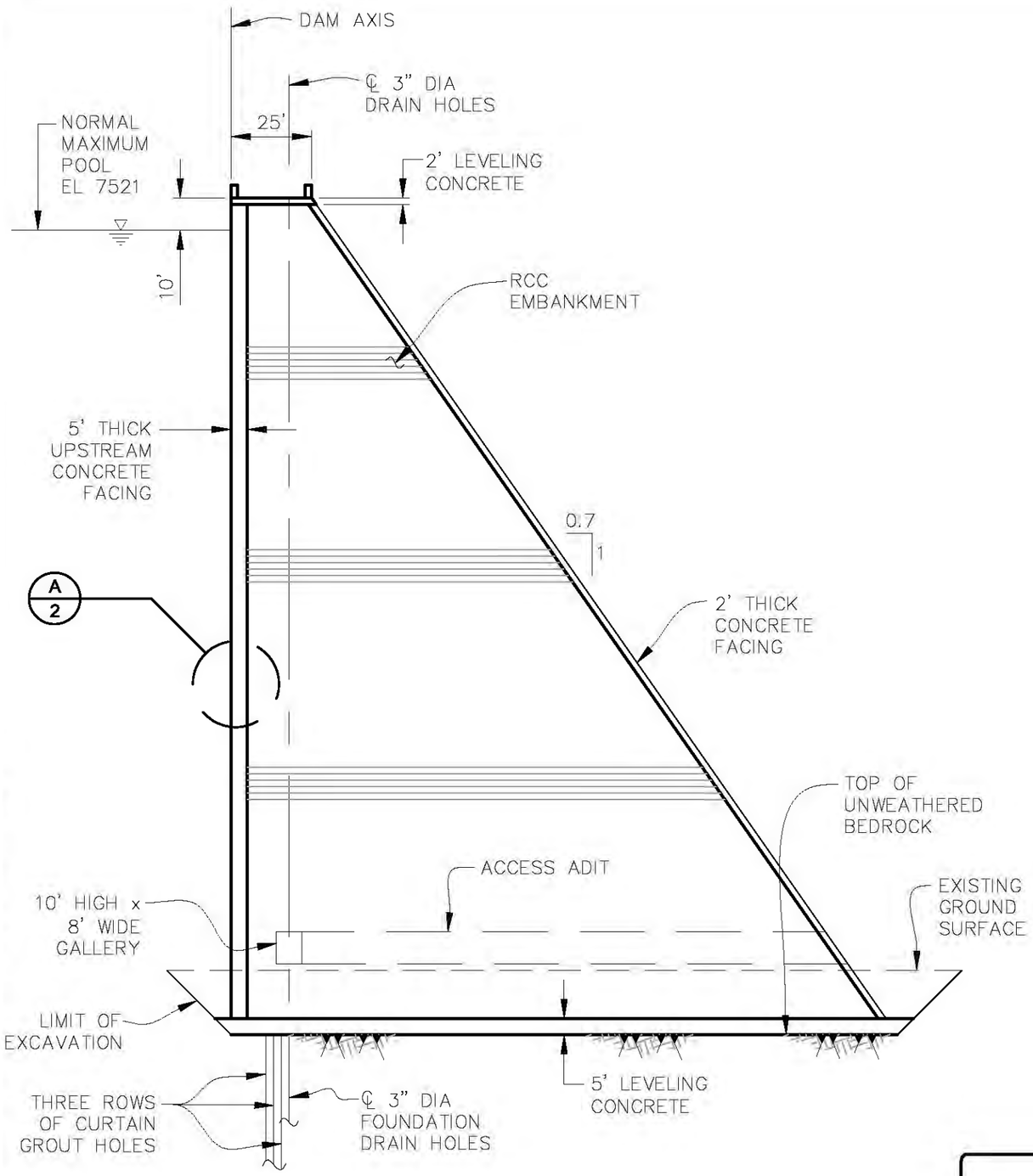

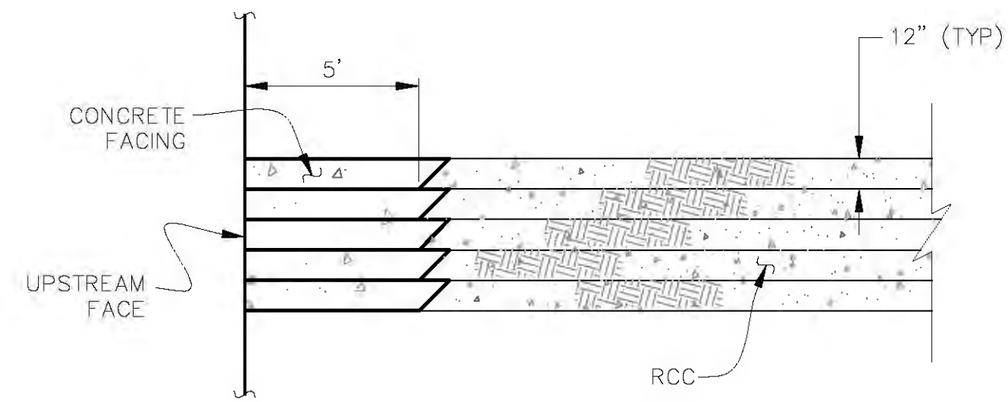

NOTE:

1. DETAILS ARE NOT TO SCALE.

RJH CONSULTANTS, INC.	NEW FORK RIVER LEVEL 1 WATERSHED STUDY	SITE 9 TYPICAL MAXIMUM SECTION	
	PROJECT NO. 16123	July 2017	Figure 14

P:\16123 – NEW FORK LEVEL 1\CAD\INFRAWORKS\SITE 9.DWG 7/28/2017 9:57 AM

ATTACHMENT A

PHOTOGRAPHS

ATTACHMENT A - PHOTOGRAPHS

Photograph 1: Downstream of Site 9, looking at exposed bedrock of the Bears Ears pluton.

Photograph 2: Downstream of Site 9, looking at the remains of the diversion structure for the abandoned canal.

ATTACHMENT B

CHURCH RESERVOIR CONCEPTUAL DESIGN DRAWINGS AND COST ESTIMATE

Initial Cost Estimate - 6,000 AF Reservoir
Green River Alternate Storage Project
Church Reservoir Site

Item No.	Description	Unit	Est. Quantity	Unit Price	Item Price
1	Mobilization	LS		$250,000	$250,000
Dam					
1	Shell Embankment	CY	377,400	$2.50	$943,500
2	Core Embankment	CY	72,900	$3.50	$255,150
3	Drain Material	CY	15,300	$15.00	$229,500
4	Dam Face Riprap	CY	20,500	$7.00	$143,500
5	Excavation	CY	102,100	$5.00	$510,500
6	Grout	LF	12,000	$30	$360,000
				Sub-Total	$2,442,150
Outlet Works					
1	Outlet Works	LS		$1,100,000	$1,100,000
Spillway					
1	Excavation	CY	20,500	$7	$143,500
2	Concrete Crest	LS		$100,000	$100,000
					$243,500
Diversion Dam/Canal					
1	Diversion Dam	LS		$60,000	$60,000
2	Canal Inlet Structure	LS		$25,000	$25,000
3	Canal	LF	4,500	$75	$337,500
4	Reservoir Drop Structure	LF	90	$500	$45,000
				Sub-Total	$467,500
Misc.					
1	Environmental Mitigation	LS		$200,000	$200,000
2	Other Mitigation	LS		$50,000	$50,000
3	Access Roads	LS		$125,000	$125,000
				Sub-Total	$375,000

Estimated Construction Cost Sub-Total #1:	$4,734,650
Engineering Costs:	$473,465
Subtotal #2:	$5,208,115
Contingency = Subtotal #2 x 15%:	$781,217
Construction Cost Total:	$5,989,332
Preparation of Final Design:	$479,147
Permitting:	$500,000
Legal Fees:	
Acquisition of Access and Rights-of-Way:	$500,000
Year 2002 Estimated Project Cost Total:	$7,468,479
Use:	$7,500,000
50% Grant Program:	$3,750,000
Annual Payment with 6% over 50 years:	$237,916
75% Grant Program:	$1,875,000
Annual Payment with 6% over 50 years:	$118,958
Annual Payment with 4% over 50 years:	$87,282

GREEN RIVER ASR AND ALTERNATE STORAGE
CHURCH RESERVOIR LOCATION

WYOMING WATER DEVELOPMENT COMMISSION

CONCEPTUAL PLANS

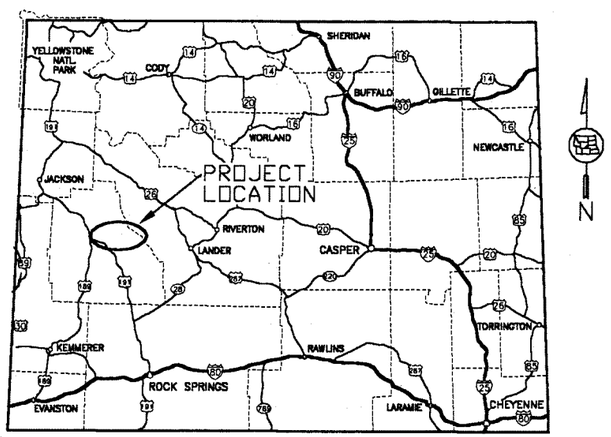

WYOMING

STATE OF WYOMING
NO SCALE

DRAWING INDEX

SHEET NO.	DRAWING
1	TITLE SHEET
2	RESERVOIR CONTOURS AND PROPERTY OWNERSHIP
3	DAM SITE
4	CROSS SECTIONS
5	INTAKE STRUCTURE AND OUTLET WORKS CROSS SECTION
6	GATE CHAMBER
7	CONTROL BUILDING AND PLUNGE POOL
8	SPILLWAY DETAILS
9	DIVERSION DAM AND CANAL SECTION

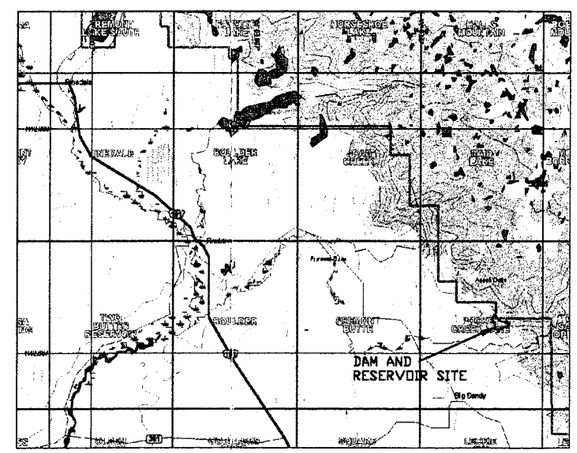

VICINITY MAP
NO SCALE

FILE NAME: TITLE | OPER: JMM | PROJ. # 385 | LOC: BOULDER, WYOMING | SEND TO: JACK NIEMA, P.E.
SCALE: AS SHOWN | DATE: SEPT 2002 | TASK # 004 | PROJ: GREEN RIVER ALTERNATE | PHONE: (307) 634-7648

REV	DESCRIPTION OF REVISION	BY	DATE

STATES WEST WATER RESOURCES CORPORATION
1904 EAST 15TH STREET
CHEYENNE, WYOMING 82001
(307) 634-7648
(307) 634-7651 FAX

WARNING
0 0 1
IF THIS BAR DOES NOT MEASURE 1" THEN DRAWING IS NOT TO SCALE

DESIGNED	VEA
DRAWN	JMM
CHECKED	JMM/VEA
PEER REVIEWED	
PROJECT MANAGER	VEA
DATE	SEPT 2002

CHURCH RESERVOIR

TITLE SHEET

REVISION
PROJECT 385.004
DRAWING
SHEET 1 OF 9

Church_Reservoir-Green_River_ASR_and_Alternate_Storage_Investigation-Final_Report-2002.pdf

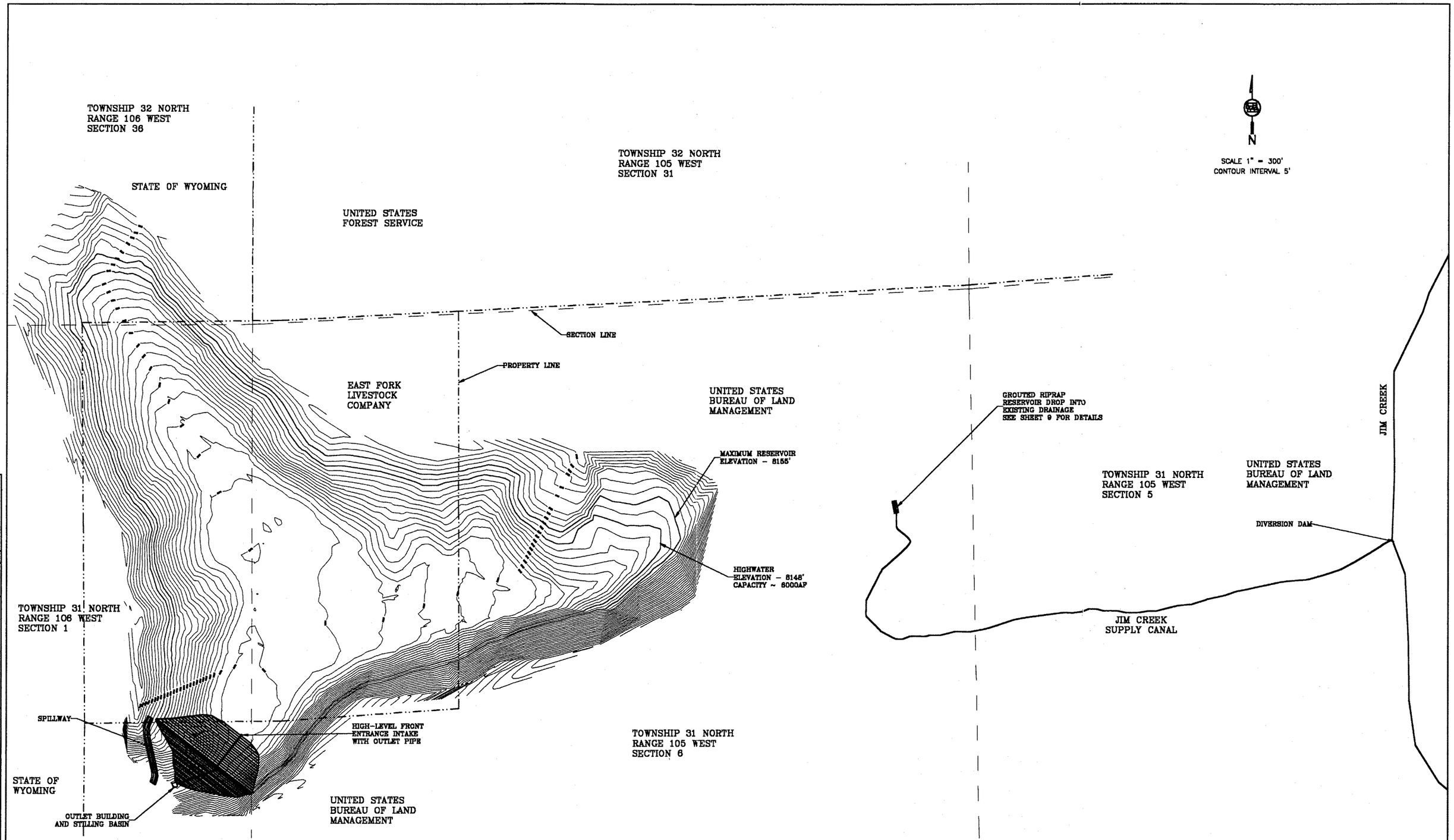

FILE NAME: DAM5000 | OPER: JMM | PROJ. # 385 | LOC: BOULDER, WYOMING | SEND TO: JACK MEENA, P.E.
SCALE: 1" = 300' | DATE: SEPT 2002 | TASK # 004 | PROJ: GREEN RIVER ALTERNATE | PHONE: (307) 634-7848

REV	DESCRIPTION OF REVISION	BY	DATE
△			
△			
△			
△			
△			
△			

STATES WEST WATER RESOURCES CORPORATION
1904 EAST 15TH STREET
CHEYENNE, WYOMING 82001
(307) 634-7848
(307) 634-7851 FAX

WARNING
0 6 1
IF THIS BAR DOES NOT MEASURE 1" THEN DRAWING IS NOT TO SCALE

DESIGNED	VEA
DRAWN	JMM
CHECKED	JMM/VEA
PEER REVIEWED	
PROJECT MANAGER	VEA
DATE	SEPT 2002

CHURCH RESERVOIR

RESERVOIR CONTOURS AND PROPERTY OWNERSHIP

REVISION △
PROJECT 385.004
DRAWING
SHEET 2 OF 9

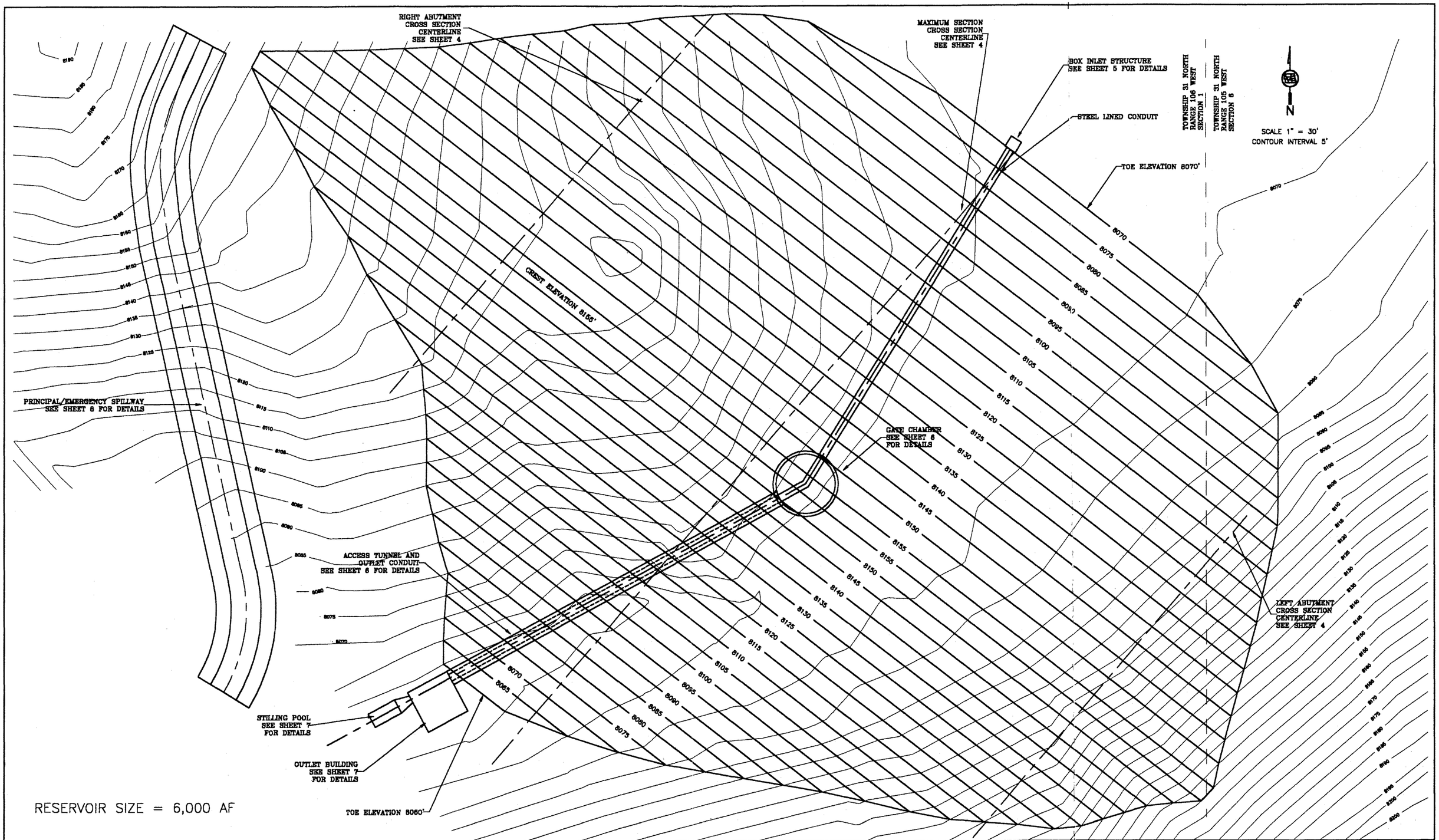

FILE NAME: 8000SITE
SCALE: 1" = 30'
OPER. JMM
DATE SEPT 2002
PROJ. # 385
TASK # 004
LOC. BOULDER, WYOMING
PROJ. GREEN RIVER ALTERNATE
SEND TO JACK MEENA, P.E.
PHONE (307) 634-7848

REV	DESCRIPTION OF REVISION	BY	DATE
△			
△			
△			
△			
△			
△			

STATES WEST WATER RESOURCES CORPORATION
1904 EAST 15TH STREET
CHEYENNE, WYOMING 82001
(307) 634-7848
(307) 634-7851 FAX

WARNING
0 ½ 1
IF THIS BAR DOES NOT MEASURE 1" THEN DRAWING IS NOT TO SCALE

DESIGNED VEA
DRAWN JMM
CHECKED JMM/VEA
PEER REVIEWED
PROJECT MANAGER VEA
DATE SEPT 2002

CHURCH RESERVOIR

DAM SITE

REVISION △
PROJECT 385.004
DRAWING
SHEET 3 OF 9

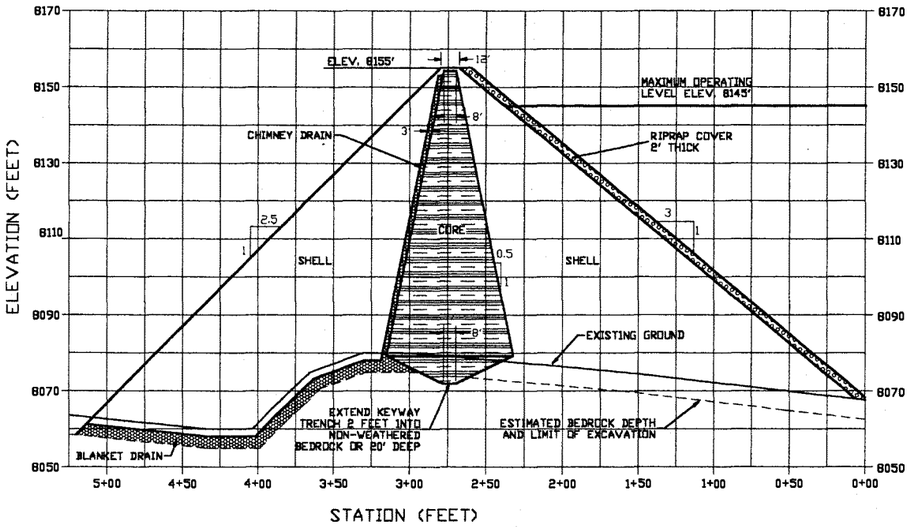

MAXIMUM CROSS SECTION

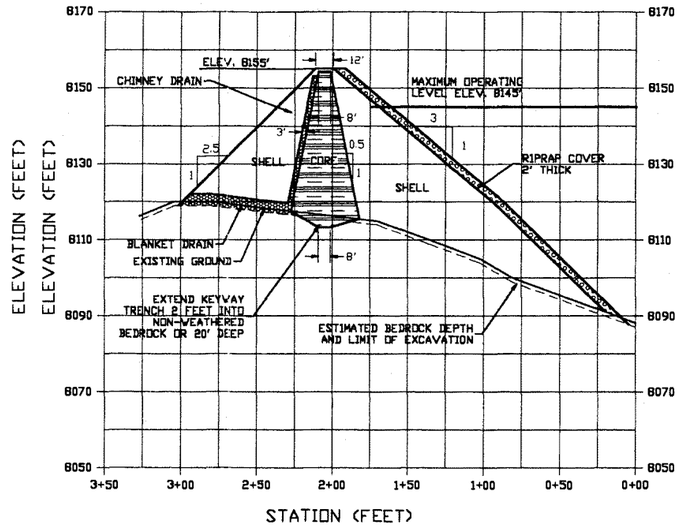

RIGHT ABUTMENT CROSS SECTION

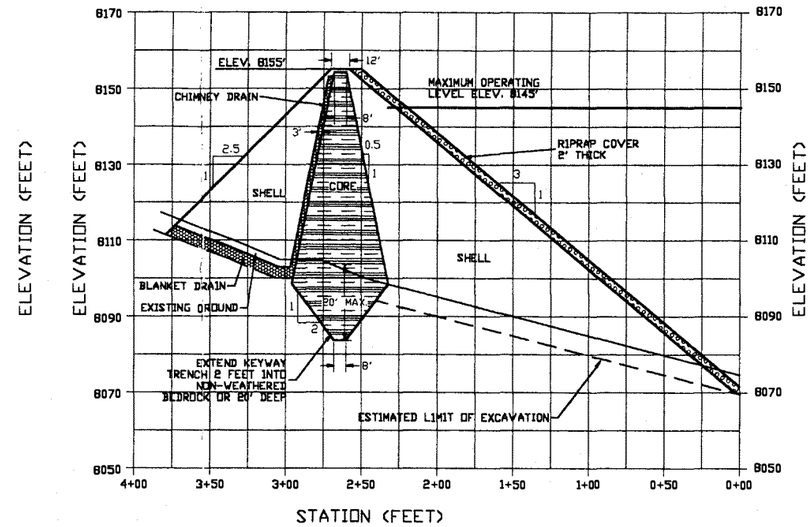

LEFT ABUTMENT CROSS SECTION

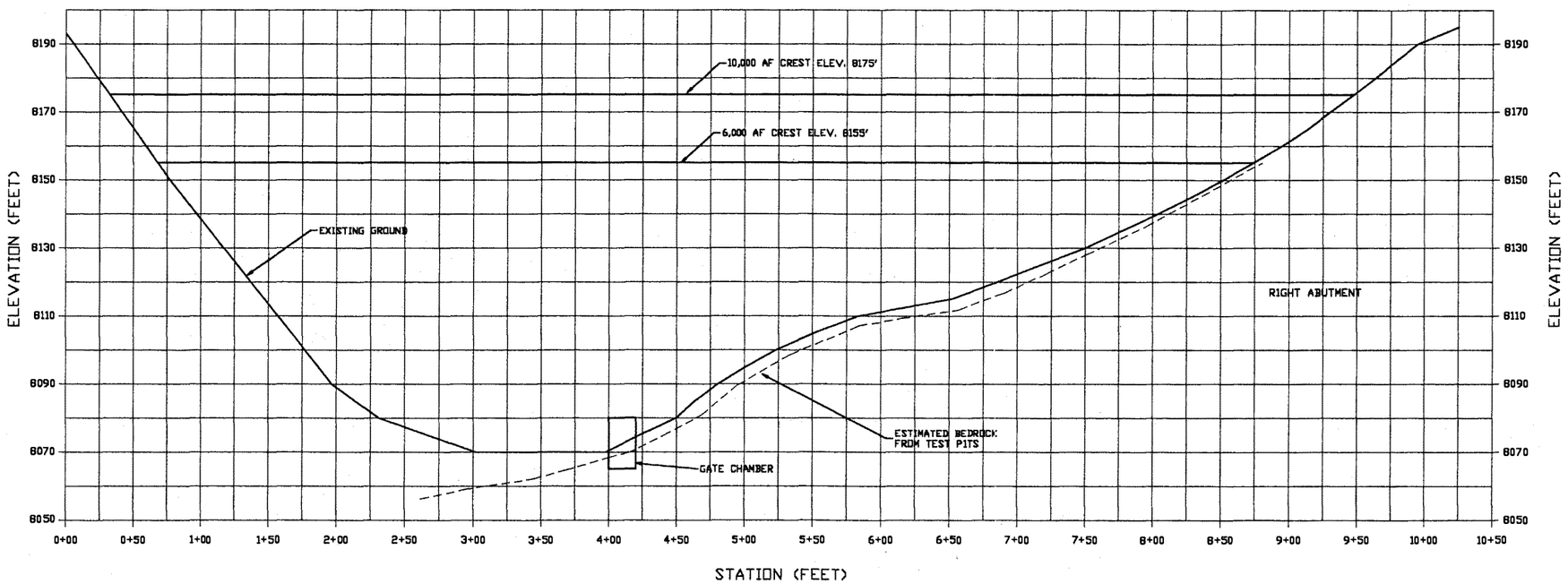

VALLEY CROSS SECTION AT DAM CENTERLINE

FILE NAME: SECTIONS
SCALE: AS SHOWN
DRFR. JMM
DATE SEPT 2002
PROJ. # 385
JOB# 004
LOC. BOULDER, WYOMING
PROJ. GREEN RIVER ALTERNATE
SEND TO JACK MEENA, P.E.
PHONE (307) 634-7848

REV	DESCRIPTION OF REVISION	BY	DATE
△			
△			
△			
△			
△			
△			

STATES WEST WATER RESOURCES CORPORATION
1904 EAST 15TH STREET
CHEYENNE, WYOMING 82001
(307) 634-7848
(307) 634-7851 FAX

WARNING
0 8 1
IF THIS BAR DOES NOT MEASURE 1" THEN DRAWING IS NOT TO SCALE

DESIGNED VEA
DRAWN JMM
CHECKED JMM/VEA
PEER REVIEWED
PROJECT MANAGER VEA
DATE SEPT 2002

CHURCH RESERVOIR

VALLEY SECTION AND DAM CROSS SECTIONS

REVISION △
PROJECT 385.004
DRAWING
SHEET 4 OF 9

Church_Reservoir-Green_River_ASR_and_Alternate_Storage_Investigation-Final_Report-2002.pdf

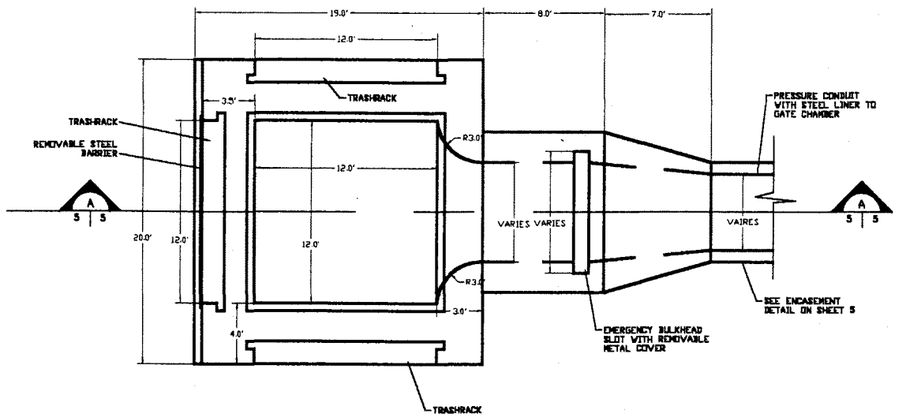

OUTLET WORKS INTAKE PLAN VIEW

SCALE IN FEET

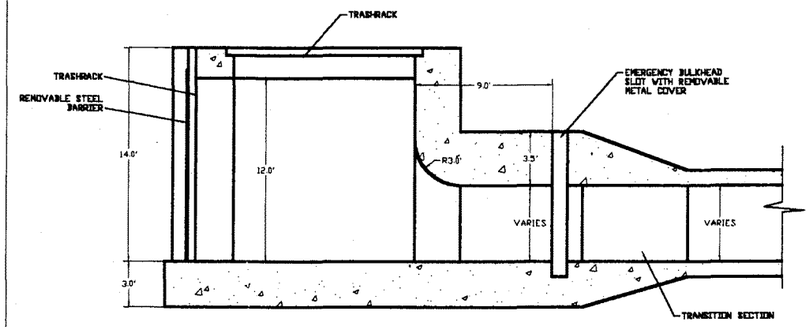

INTAKE SECTION A

SCALE IN FEET

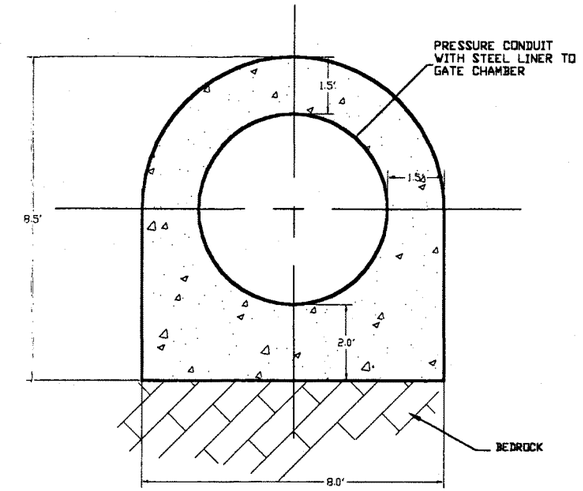

OUTLET WORKS PRESSURE CONDUIT SECTION

SCALE IN FEET

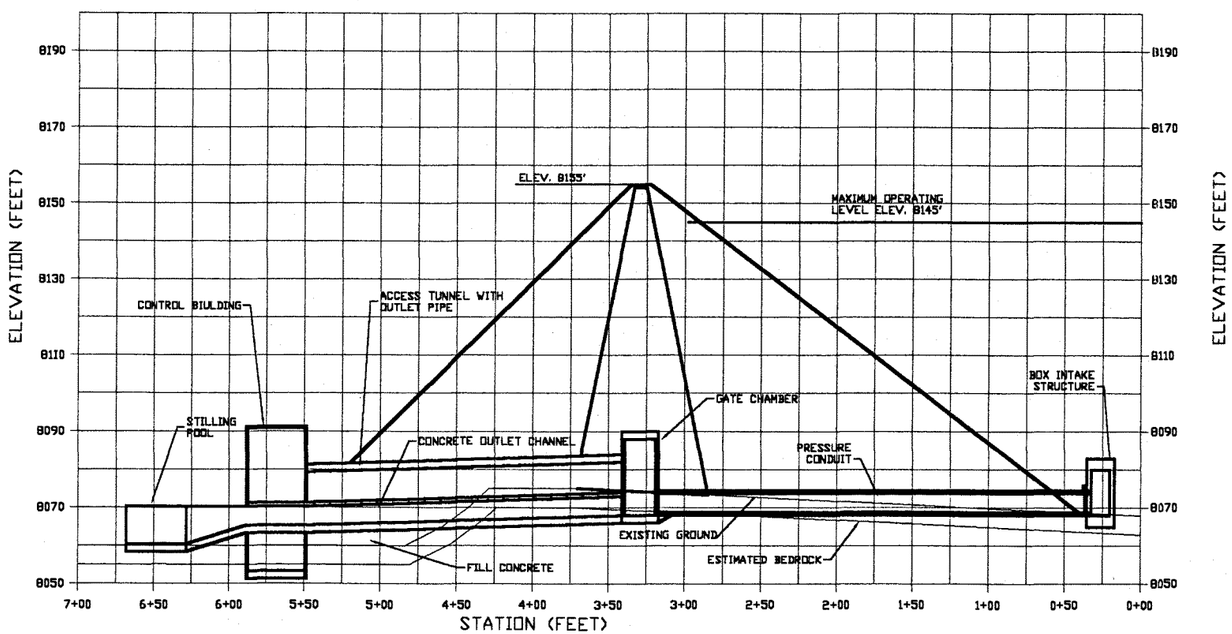

OUTLET WORKS CROSS SECTION

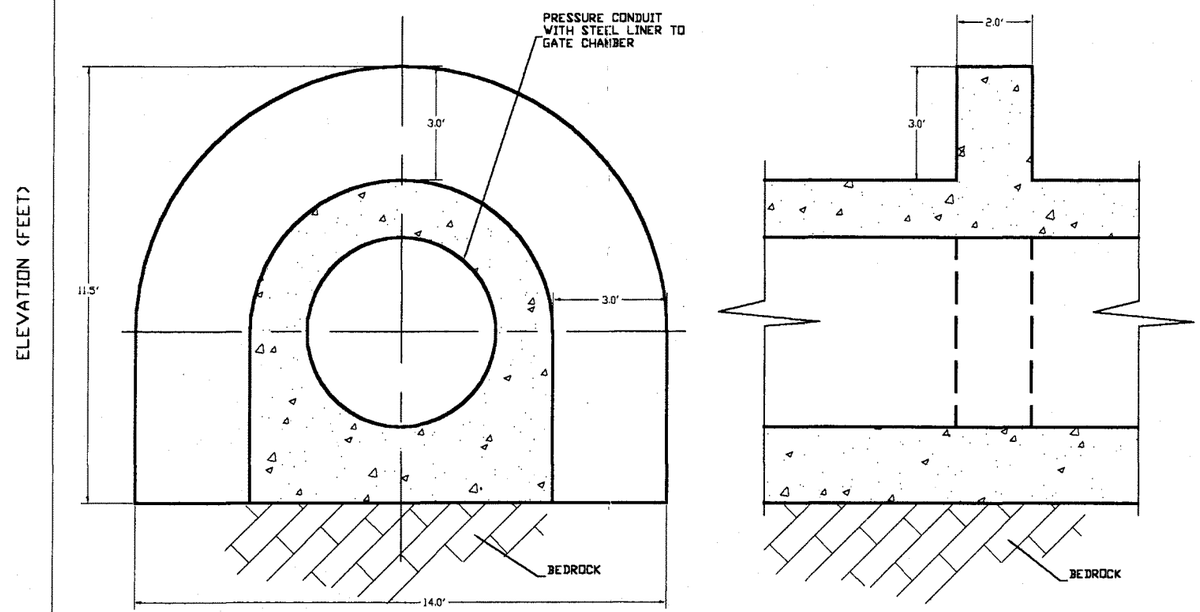

OUTLET WORKS PRESSURE CONDUIT CUTOFF SECTION

SCALE IN FEET

REV	DESCRIPTION OF REVISION	BY	DATE
△			
△			
△			
△			
△			
△			

STATES WEST WATER RESOURCES CORPORATION
1904 EAST 15TH STREET
CHEYENNE, WYOMING 82001
(307) 634-7848
(307) 634-7851 FAX

WARNING
0 8 1
IF THIS BAR DOES NOT MEASURE 1" THEN DRAWING IS NOT TO SCALE

DESIGNED	VEA
DRAWN	JMM
CHECKED	JMM/VEA
PEER REVIEWED	
PROJECT MANAGER	VEA
DATE	SEPT 2002

CHURCH RESERVOIR

INTAKE STRUCTURE AND OUTLET WORKS CROSS SECTION

REVISION △
PROJECT 385.004
DRAWING
SHEET 5 OF 9

FILE NAME: OUTLET
SCALE: AS SHOWN
DFT'L JMM
DATE SEPT 2002
PROJ. # 385
TASK # 004
LOC. BOULDER, WYOMING
PROJ. GREEN RIVER ALTERNATE
SEND TO JACK MEENA, P.E.
PHONE (307) 634-7848

Church_Reservoir-Green_River_ASR_and_Alternate_Storage_Investigation-Final_Report-2002.pdf

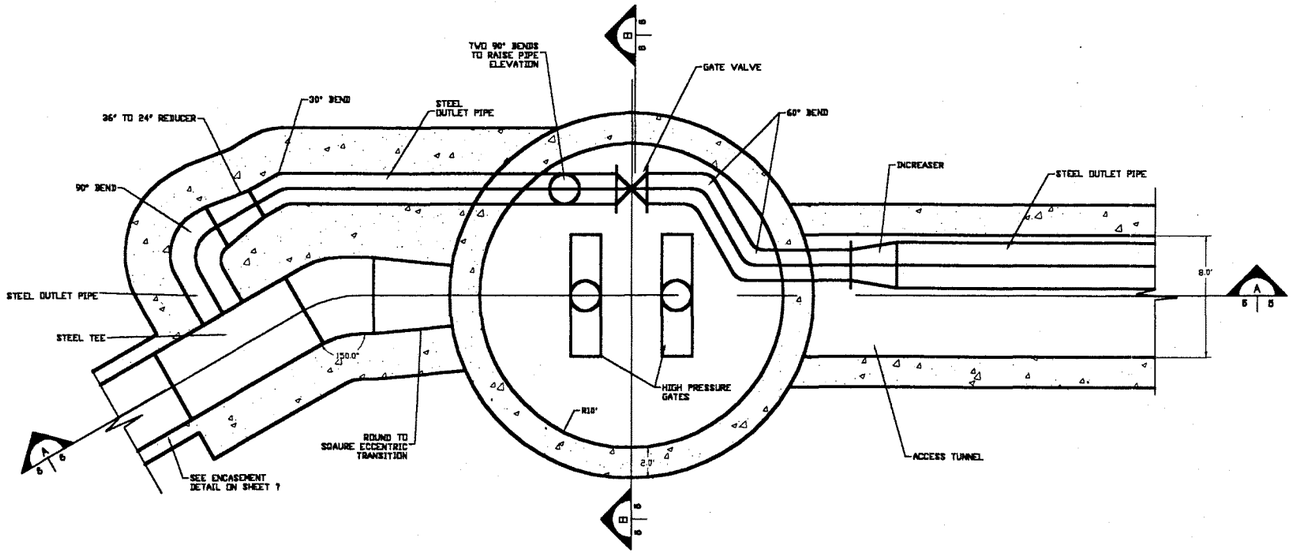

OUTLET WORKS GATE CHAMBER VIEW

5 4 3 2 1 0 5 10
SCALE IN FEET

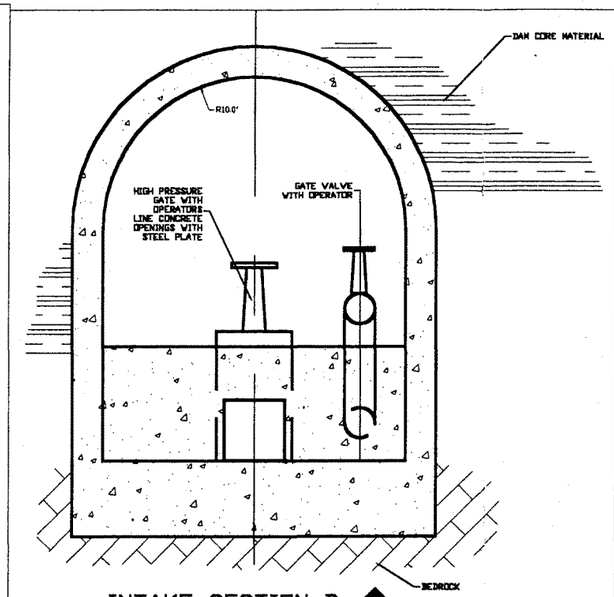

INTAKE SECTION B

5 4 3 2 1 0 5 10
SCALE IN FEET

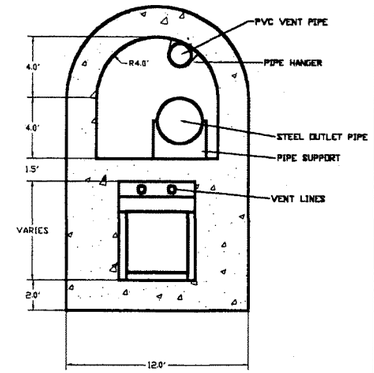

ACCESS TUNNEL SECTION C

5 4 3 2 1 0 5 10
SCALE IN FEET

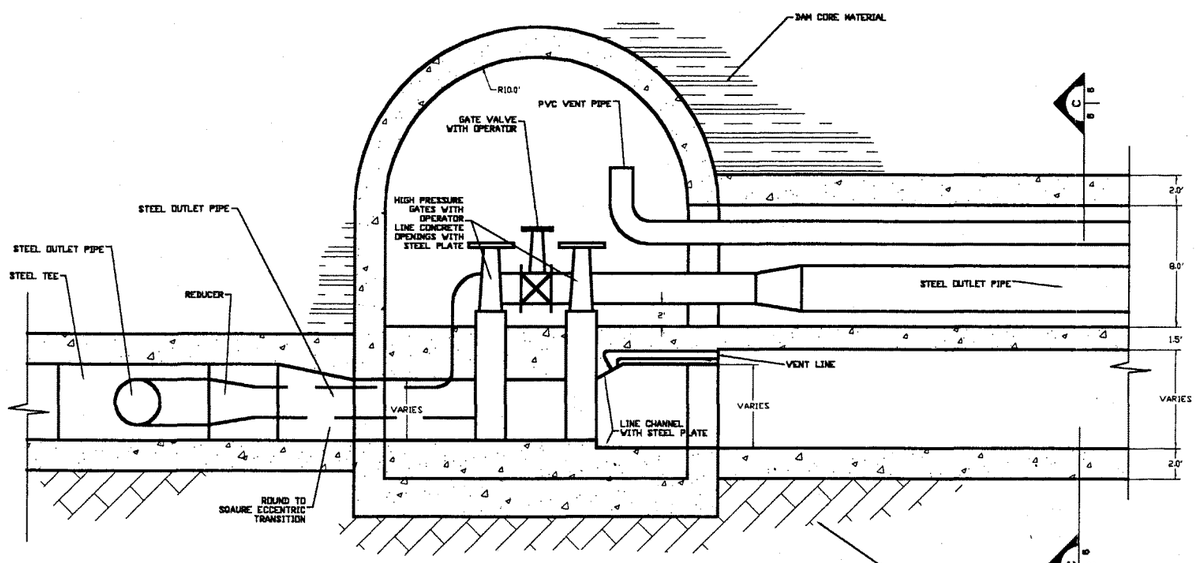

INTAKE SECTION A

5 4 3 2 1 0 5 10
SCALE IN FEET

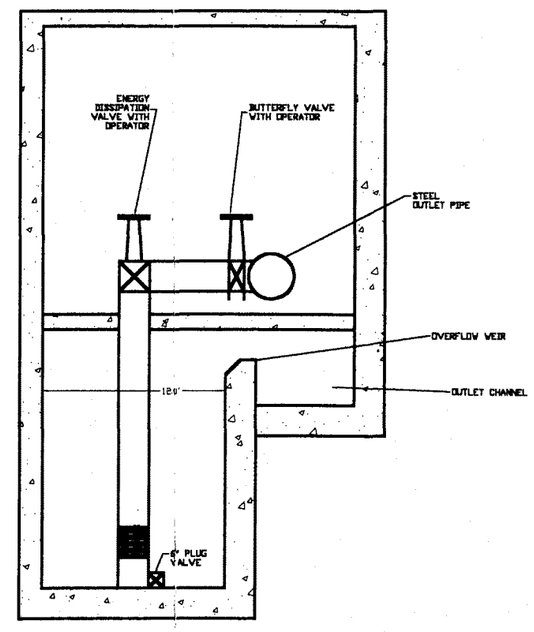

CONTROL BUILDING SECTION A

5 4 3 2 1 0 5 10
SCALE IN FEET

FILE NAME: OUTLET | DRFTR: JMM | PROJ. # 385 | LOC: BOULDER, WYOMING | SEND TO: JACK MIERA, P.E.
SCALE: AS SHOWN | DATE: SEPT 2002 | TASK # 004 | PROJ: GREEN RIVER ALTERNATE | PHONE: (307) 634-7848

REV	DESCRIPTION OF REVISION	BY	DATE

STATES WEST WATER RESOURCES CORPORATION
1904 EAST 15TH STREET
CHEYENNE, WYOMING 82001
(307) 634-7848
(307) 634-7851 FAX

WARNING
0 6 1
IF THIS BAR DOES NOT MEASURE 1" THEN DRAWING IS NOT TO SCALE

DESIGNED	VEA
DRAWN	JMM
CHECKED	JMM/VEA
PEER REVIEWED	
PROJECT MANAGER	VEA
DATE	SEPT 2002

CHURCH RESERVOIR

GATE CHAMBER

REVISION △
PROJECT 385.004
DRAWING
SHEET 6 OF 9

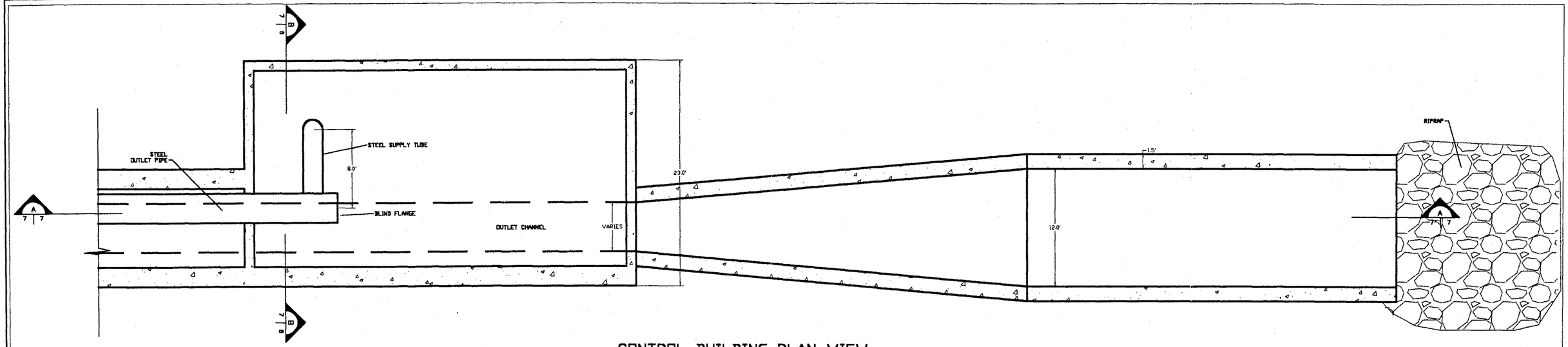

CONTROL BUILDING PLAN VIEW

5 4 3 2 1 0 5 10
SCALE IN FEET

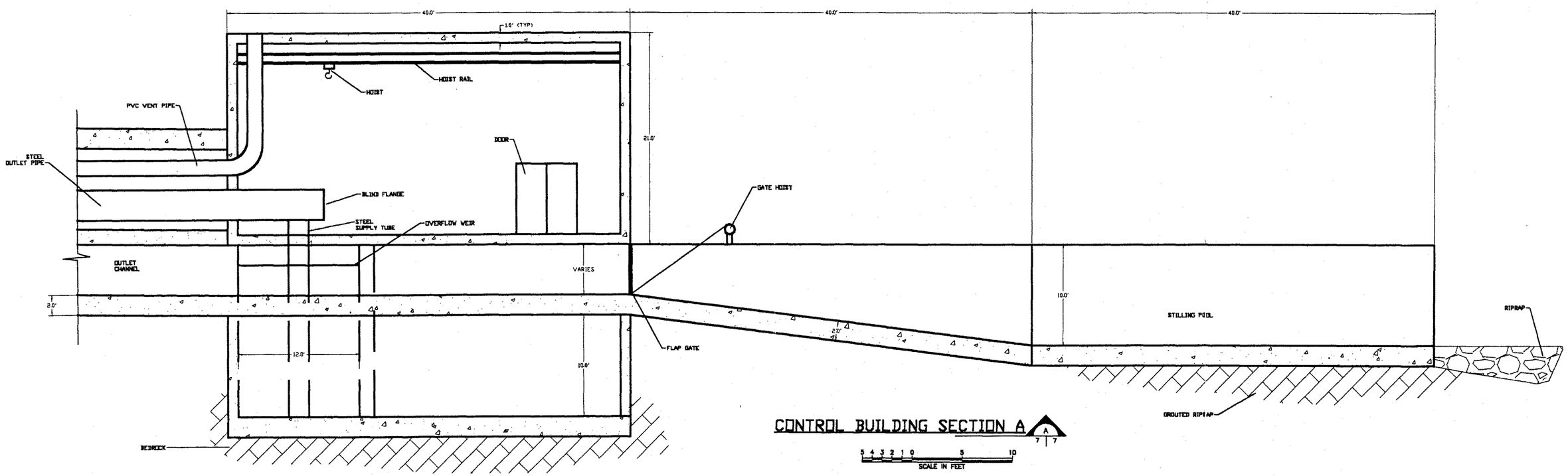

CONTROL BUILDING SECTION A

A 7 7

5 4 3 2 1 0 5 10
SCALE IN FEET

REV	DESCRIPTION OF REVISION	BY	DATE

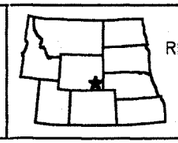

STATES WEST WATER RESOURCES CORPORATION
1904 EAST 15TH STREET
CHEYENNE, WYOMING 82001
(307) 634-7848
(307) 634-7851 FAX

WARNING
0 8 1
IF THIS BAR DOES NOT MEASURE 1" THEN DRAWING IS NOT TO SCALE

DESIGNED	VEA
DRAWN	JMM
CHECKED	JMM/VEA
PEER REVIEWED	
PROJECT MANAGER	VEA
DATE	SEPT 2002

CHURCH RESERVOIR

CONTROL BUILDING AND PLUNGE POOL

REVISION
PROJECT 385.004
DRAWING
SHEET 7 OF 9

FILE NAME: OUTLET
SCALE: AS SHOWN
OPER. JMM
DATE SEPT 2002
PROJ. # 385
TASK # 004
LOC. BOULDER, WYOMING
PROJ. GREEN RIVER ALTERNATE
SEND TO JACK MEENA, P.E.
PHONE (307) 634-7848

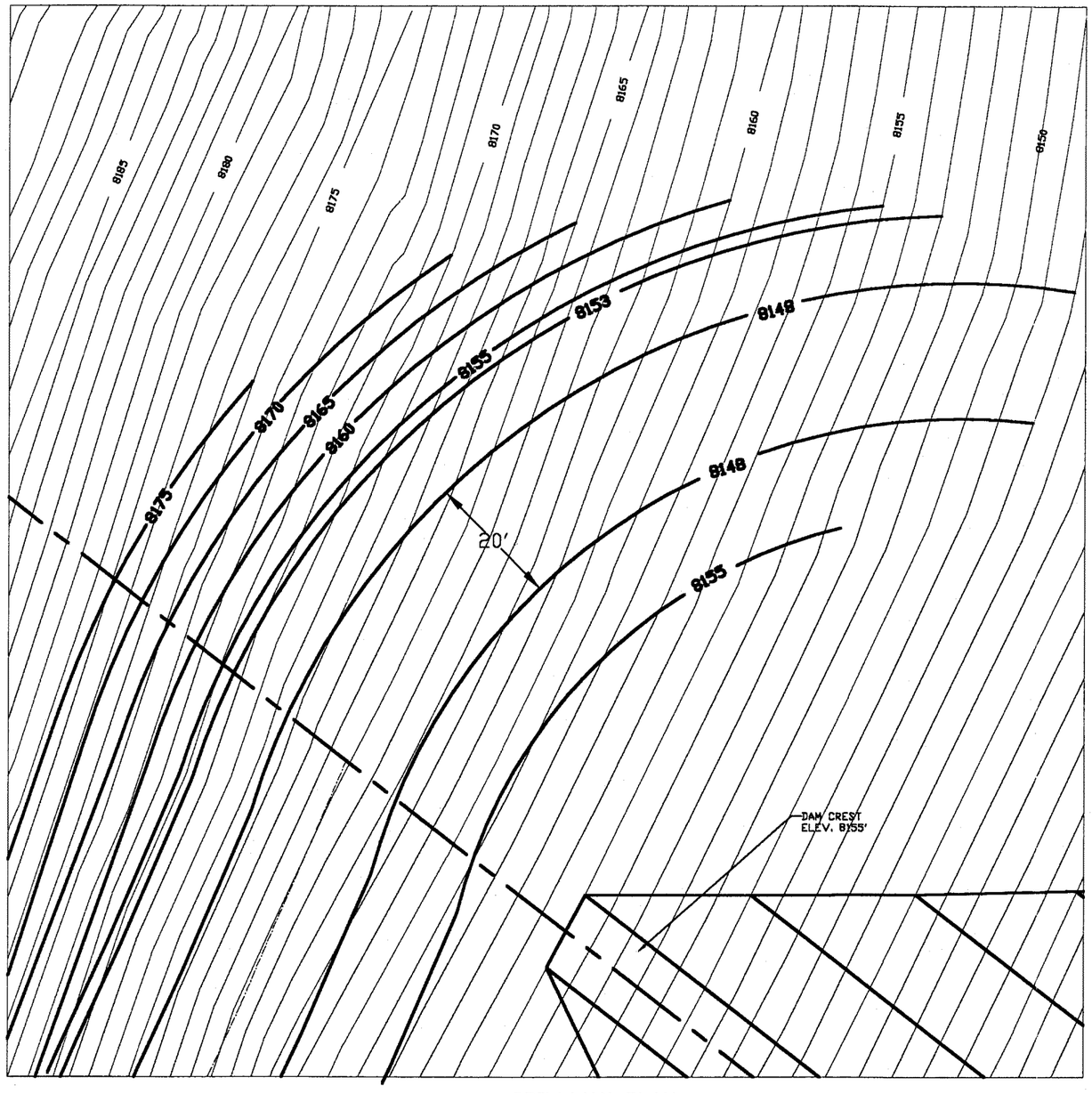

SPILLWAY PLAN

10 8 5 4 2 0 10 20

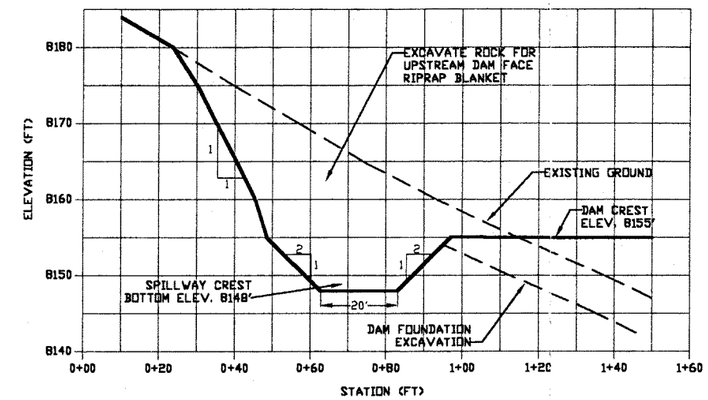

SPILLWAY CROSS SECTION

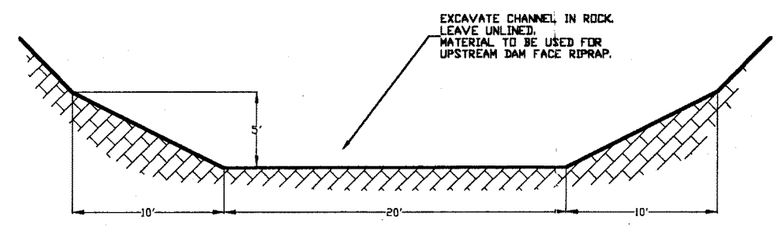

TYPICAL SPILLWAY CHUTE CROSS-SECTION

5 4 3 2 1 0 5 10

FILE NAME: SPILLWAY | OPER: JMM | PROJ. / 385
SCALE: AS SHOWN | DATE: SEPT 2002 | TASK / 004
LOC: BOULDER, WYOMING | PROJ: GREEN RIVER ALTERNATE
SEND TO: JACK MESTA, P.E. | PHONE: (307) 634-7848

REV	DESCRIPTION OF REVISION	BY	DATE
△			
△			
△			
△			
△			
△			

STATES WEST WATER RESOURCES CORPORATION
1904 EAST 15TH STREET
CHEYENNE, WYOMING 82001
(307) 634-7848
(307) 634-7851 FAX

WARNING
0 8 1
IF THIS BAR DOES NOT MEASURE 1" THEN DRAWING IS NOT TO SCALE

DESIGNED	VEA
DRAWN	JMM
CHECKED	JMM/VEA
PEER REVIEWED	
PROJECT MANAGER	VEA
DATE	SEPT 2002

CHURCH RESERVOIR

SPILLWAY DETAILS

REVISION △
PROJECT 385.004
DRAWING
SHEET 8 OF 9

Church_Reservoir-Green_River_ASR_and_Alternate_Storage_Investigation-Final_Report-2002.pdf

ATTACHMENT C

WILLOW LAKE CONSTRUCTION PERMIT

PROFILE DAM

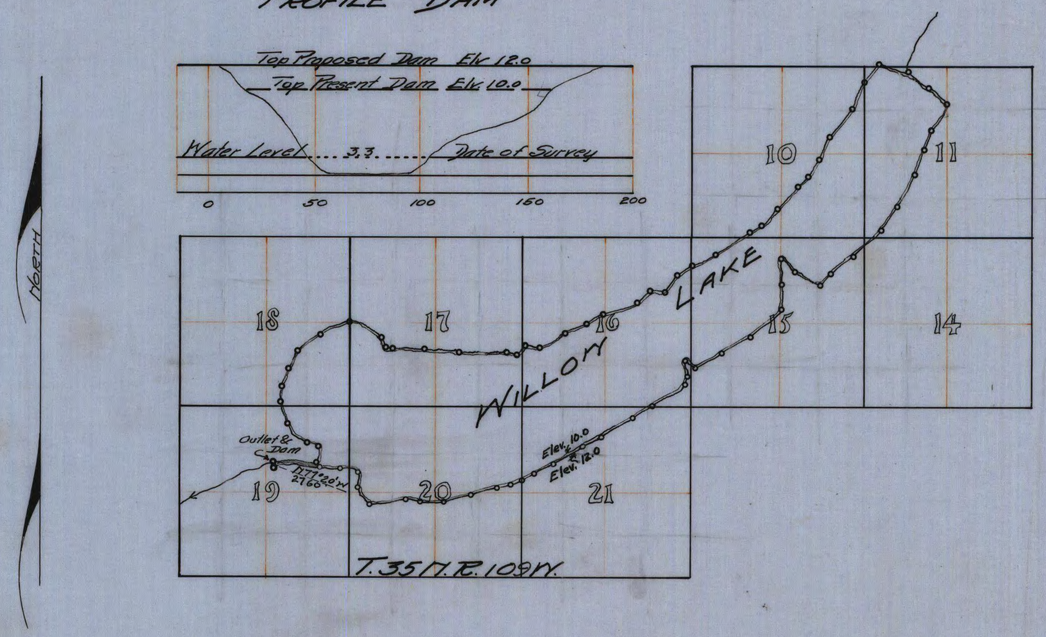

ENGINEER'S CERTIFICATE

State of Wyoming }
County of Laramie } ss

I, T. H. Baldwin, of Cheyenne, Wyoming, hereby certify that this map was made from notes taken during an actual survey made by me in September 1931, and that it accurately represents the irrigation works described in the accompanying application and that the shore line of Willow Lake as shown is at elevation 3.3.

T. H. Baldwin
Engineer

RESERVOIR CAPACITY TABLE			
Contour	Area	Average	Capcity
10	1840		
		1848	3696
12	1856		

Capacity - This Enlargement - Total Acre Feet 3696
Capacity - Under Permit No. 3831 Res. - 15,120 Ac. Ft.
Total - 18,816 "

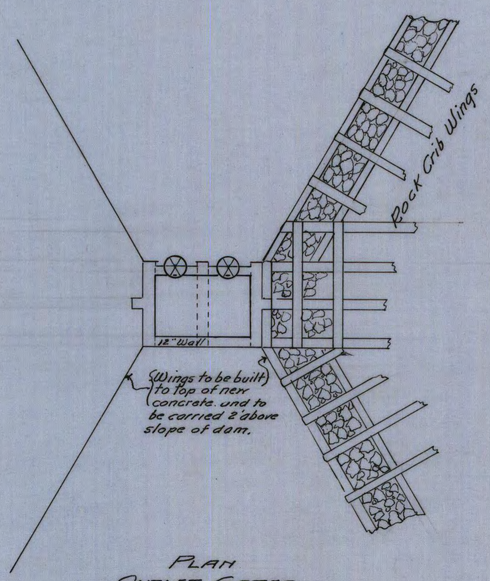

PLAN
OUTLET GATES
Scale 1/8" = 1'

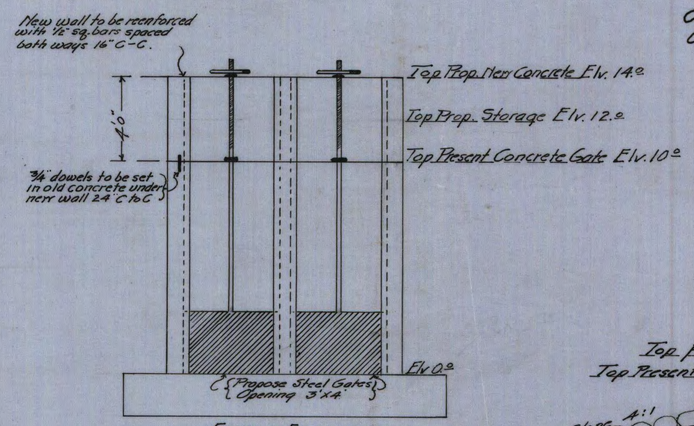

FRONT ELEVATION
Scale 1/4" = 1'

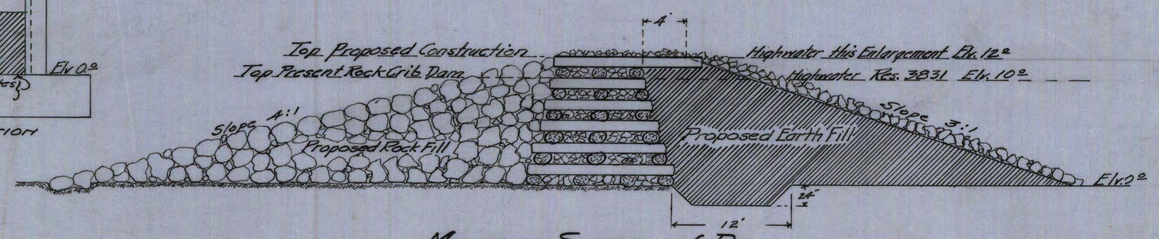

MAXIMUM SECTION OF DAM
Scale 1/8" = 1'

Approved July 7, 1932,
John A. Whiting
State Engineer.

MAP
TO ACCOMPANY APPLICATION FOR ENLARGEMENT
WILLOW LAKE RESERVOIR
Applicant
WILLIAM BAYER
Pinedale - Wyo.
Scale 2" = 1 mile.

4475 Res.
136/156 E.

Appendix Q.
Commonly Required Types of Permits, Notifications, and Approvals

Contents

Q.1 Introduction 3
Q.2 Clean Water Act Section 404 3
Q.3 Clean Water Act Section 401 4
Q.4 Special Use Permits/Rights of Way/Easements 4
Q.5 Sage-Grouse 4
Q.6 National Historic Preservation Act Section 106 5
Q.7 Endangered Species Act 5
Q.8 National Environmental Policy Act 5
Q.9 Wyoming State Engineer's Office Permit to Construct/ Dam Safety Review 6
Q.10 Wyoming State Engineer's Office Ditch Enlargement Permit 6
Q.11 Wyoming State Engineer's Office Permit to Appropriate Ground Water 6
Q.12 United States Forest Service 7
Q.13 Bureau of Land Management 7
Q.14 State of Wyoming Board of Land Commissioners 7
Q.15 References 7

Q.1 Introduction

This appendix provides descriptions of the permits, notifications, and approvals that are listed in Section 6.0 of the main body of this document.

Q.2 Clean Water Act Section 404

Section 404 of the Clean Water Act (CWA) establishes a program to regulate the discharge of dredged or fill material into waters of the United States, including wetlands. Activities in waters of the United States regulated under this program include fill for development, water resource projects (such as dams and levees), infrastructure development (such as highways and airports) and mining projects. Section 404 requires that a permit must be acquired before dredged or fill material may be discharged into waters of the United States, unless the activity is exempt from Section 404 regulation (e.g., certain farming and forestry activities).

The basic premise of the program is that no discharge of dredged or fill material may be permitted if (1) a practicable alternative exists that is less damaging to the aquatic environment or (2) the nation's waters would be significantly degraded. In other words, when you apply for a permit, you must first show that steps have been taken to avoid impacts to wetlands, streams, and other aquatic resources; that potential impacts have been minimized; and that compensation will be provided for all remaining unavoidable impacts.

Proposed activities are regulated through a permit review process (EPA 2017). An individual permit is required for potentially significant impacts. Individual permits are reviewed by the U.S. Army Corps of Engineers (USACE), which evaluates applications under a public interest review, as well as the environmental criteria set forth in the CWA Section 404(b)(1) Guidelines, which are regulations promulgated by the U.S. Environmental Protection Agency.

Most of the small water projects identified herein will have only minimal adverse effects, and a general permit might be suitable. General permits are issued on a nationwide, regional, or state basis for particular categories of activities (U.S. Army Corps of Engineers 2017). The general permit process eliminates individual review and allows certain activities to proceed with little or no delay, provided that the general or specific conditions for the general permit are met. For example, Nationwide Permit 3 is applicable for:

- Repair, rehabilitation, or replacement of any previously authorized, currently serviceable structure or fill, or of any currently serviceable structure.
- Removal of accumulated sediments and debris outside the immediate vicinity of existing structures (e.g., bridges, culverted road crossings, water intake structures).
- Temporary structures, fills, and work, including the use of temporary mats, necessary to conduct the maintenance activity.

A pre-construction notification to the district engineer (U.S. Army Corps of Engineers) is required for most general permits.

Q.3 Clean Water Act Section 401

CWA Section 401 Water Quality Certification (401 Certification) is required for any federal license or permit which might result in a discharge into waters of the United States (e.g., CWA permits). The Wyoming Department of Environmental Quality/Water Quality Division (WDEQ/WQD), reviews and issues Water Quality Certifications under Section 401 of the federal Clean Water Act (CWA) (WYDEQ 2017).

All dredge/fill activities authorized under a USACE Individual Permit, regardless of surface water classification, requires an individual 401 Certification issued by the WDEQ/WQD. For these activities, the WDEQ/WQD and USACE issue a joint 30-day public notice and comment period.

WDEQ/WQD has categorically certified the majority of the 2017 USACE Nationwide Permits on non-Class 1 waters in Wyoming with the expectation that applicants must comply with the permit's terms and conditions, including permit-specific 401 Certification conditions for the certification to be valid. These categorically certified permits do not require an individual 401 Certification by the WDEQ/WQD.
All dredge/fill activities authorized under a USACE Nationwide Permit to a Class 1 water requires an individual 401 Certification issued by the WDEQ/WQD. For these activities, a 14-day public notice and comment period is required.

Q.4 Special Use Permits/Rights of Way/Easements

Special use permits, rights-of-way (ROW), or easements will be required wherever access across the lands of others (private, state, or federal) is needed for construction and/or operation of the project facilities. These might be temporary (e.g., access to a temporary borrow area or quarry site to be closed and reclaimed, construction of a new haul road) or permanent (e.g., construction of a wildlife/livestock pipeline alignment). Usually privately owned lands that will be rendered permanently unavailable (such as the dam and reservoir footprint of a storage project) would be purchased unless the owner desires, and the sponsoring entity concurs, that a permanent easement be provided instead. Permanent use of federal lands (U.S. Forest Service [USFS] or Bureau of Land Management [BLM]) likely would be administered through their special use programs. Any project to be constructed on state or school lands must have a right-of-way, as required in the "Rules and Regulations Governing the Issuance of Rights Of Way" (W.S. 36-20 and W.S. 36-202).

Q.5 Sage-Grouse

In 2008 the Governor of Wyoming implemented a Core Area Protection strategy for greater sage-grouse by executive order, designed to implement protective strategies for sage-grouse habitats, populations, and connectivity areas to conserve sage-grouse and preclude the need for listing the bird as a threatened or endangered species (Freudenthal 2008). The executive order and associated map of Core Area protected lands were revised by Governor Mead in 2015 (Freudenthal 2015).

Some activities within or adjacent to sage-grouse habitat might require permits and approvals. The first point of contact for addressing sage-grouse issues for any state permit application should be the Wyoming Game and Fish Department (WGFD). Project proponents should contact WGFD at least 45 to 60 days before submitting their application. More complex projects will require more time. It is understood that WGFD has a role of consultation, recommendation, and facilitation, and has no authority to either approve or deny the project. The purpose of the initial consultation with the WGFD is to become familiar

with the project proposal and ensure the project proponent understands recommended stipulations and the stipulation implementation process.

Q.6 National Historic Preservation Act Section 106

Section 106 of the National Historic Preservation Act of 1966 (NHPA) requires federal agencies to take into account the effects of their undertakings on historic properties, and afford the Advisory Council on Historic Preservation a reasonable opportunity to comment. Laws and regulations addressing cultural resources include:

- NHPA
- National Environmental Policy Act of 1969
- Archaeological Resources Protection Act (ARPA) of L979
- National Park Service (NPS) procedures concerning the National Register (NR) of Historic Places
- Advisory Council on Historic Preservation's Procedures for the Protection of Cultural Properties
- The Treatment of Archaeological Properties of 1980: Determination of Eligibility of Inclusion in the NR
- Secretary of Interior's Standards and Guidelines for Archaeological Historical Preservation of 1983
- Reservoir Salvage Act of 1960
- 1974 Amendment to the Reservoir Salvage Act of 1960

The Wyoming State Historic Preservation Office (SHPO) is the point of contact to meet compliance with NHPA requirements. SHPO should be contacted early in the planning stages for their comments that could impact project approach and cost.

Q.7 Endangered Species Act

None of the proposed projects are located within the observed range of any federally listed threatened or endangered species. As a result, the Endangered Species Act will not likely be applicable for any of the Small Water Projects. However, the Fish and Wildlife Coordination Act requires federal agencies involved in actions that will result in the control or structural modification of any natural stream or body of water for any purpose to take action to protect the fish and wildlife resources that could be affected. It requires federal agencies or applicants to first consult with state and federal wildlife agencies to prevent, mitigate, and compensate for project-caused losses of wildlife resources.

Q.8 National Environmental Policy Act

The National Environmental Policy Act (NEPA) requires federal agencies to assess the possible environmental consequences of projects that they propose to undertake, fund, or approve. NEPA applies to any of the proposed actions for which the project site is located on federal land, when federal funds might be used, and/or when formal federal agency actions are necessary for the project to move forward. One of the primary intentions of the NEPA process is to avoid, minimize, and mitigate adverse environmental consequences of federal actions. NEPA requires analysis and documentation of potential adverse and beneficial effects of a proposed action and alternatives, and mandates an open public involvement process.

In the New Fork River watershed, it is likely that either BLM and/or USFS would be the lead federal agency(s) charged with ensuring compliance with NEPA and related environmental statutes. The BLM

would be lead for those projects on lands under their administration, and the USFS would be the lead for projects located on National Forest Service lands. The USACE would likely be the lead federal agency on private lands where wetlands might be impacted. These agencies also can work out a shared lead under a Memorandum of Understanding if there are significant issues best led by both agencies for a given project.

The level of NEPA documentation needed for projects other than major large water storage projects will need to be determined on a project-specific basis. However, if NEPA is needed for any of the Small Water Projects it will likely be an abbreviated process involving a Categorical Exclusion[1] or Environmental Assessment[2] (EA).

Q.9 Wyoming State Engineer's Office Permit to Construct/ Dam Safety Review

The Wyoming Dam Safety Law (W.S. 41-3) requires that any persons, public company, government entity, or private company who proposes to construct a dam which is greater than 20 feet high or which will impound more than 50 acre-feet of water, or a diversion system which will carry more than 50 cubic feet of water per second (cfs), must obtain approval for construction of the dam or ditch from the state engineer's office (SEO). The approval by the state engineer's office of a dam's construction is contingent upon the office's review and approval of all dam plans and specifications; these must be prepared by a registered professional engineer licensed in Wyoming. Design, construction, and operation of jurisdictional dams must also comply with dam safety regulations promulgated pursuant to the Dam Safety Act. At present, these regulations are in final draft form and formal issuance is anticipated soon.

Q.10 Wyoming State Engineer's Office Ditch Enlargement Permit

If an enlargement to an existing ditch or storage facilities is needed, an enlargement filing with the State Engineer's Office is required. Even if physical enlargement of an existing ditch is found not be to required, the enlargement filing would be required as a legal formality of a water right requirement.

Q.11 Wyoming State Engineer's Office Permit to Appropriate Ground Water

An *Application for Permit to Appropriate Ground Water* (U.W. 5 Form), must be submitted to the Ground Water Division before drilling a well or developing a spring that flows less than 25 gallons per minute (gpm) and that will be used for domestic and/or stock use. A *Statement of Completion and Description of Well or Spring* (U.W. 6 Form) is required by law to be submitted within 30 days of the date that the well is completed (including pump installation) and ready for use and a *Proof of*

[1] A number of categories of action have been determined from prior experience and analysis to result in no significant impact to the environment. If a proposed action falls into one of these categories, and if no extraordinary circumstances exist which might cause a significant impact in the specific case, these actions can be "categorically excluded" from documentation in an EA or EIS. Unlike an EA or EIS, there is no formal pre-decision comment period with a categorical exclusion (except for scoping).

[2] An EA discloses the environmental impacts to be expected from the proposed action and from specific alternatives to the proposed action. An EA is prepared when significant environmental impacts are not anticipated or when there is a question as to the extent of the impacts.

Appropriation and Beneficial Use of Ground Water (Form U.W. 8) is required to be submitted upon completion of beneficial use, and prior to the date specified by the permit.

Q.12 United States Forest Service

Coordination with the Bridger–Teton National Forest (BTNF) is recommended for all projects crossing or within the boundaries of the National Forest. The BTNF would be the lead agency for NEPA; Special Use Permits might be required for activities on national forest land. Before Special Use Permits are issued, the USFS must determine that the proposed use complies with all management plans and laws, that there is a demonstrated need for the activity, and that the use is appropriate on national forest system lands.

Q.13 Bureau of Land Management

Coordination with the BLM is recommended for all projects crossing or occurring within the boundaries of the BLM lands. The BLM would be the lead agency for NEPA and any permits, notifications, or approvals that might be needed on BLM lands.

Q.14 State of Wyoming Board of Land Commissioners

The Wyoming Board of Land Commissioners, consisting of the five statewide elected officials, is responsible for regulating all activities on state lands, including granting of rights-of-way. This is accomplished through the Office of State Lands and Investments. Any activities occurring on state lands should be coordinated with the Office of State Lands and Investments. Any project to be constructed on state or school lands must have a right-of-way, as required in the "Rules and Regulations Governing the Issuance of Rights Of Way" (W.S. 36-20 and W.S. 36-202).

Q.15 References

EPA. 2017. *Section 404 of the Clean Water Act*. https://www.epa.gov/cwa-404/section-404-permit-program. Accessed June 2, 2017.

Freudenthal, D. 2008. Executive Order 2008-2: *Greater Sage-Grouse Core Area Protection*. Wyoming Office of the Governor, Cheyenne, WY.

———. 2015. Executive Order 2015-4: *Greater Sage-Grouse Core Area Protection*. Wyoming Office of the Governor, Cheyenne, WY.

U.S. Army Corps of Engineers. 2017. *Wyoming Regulatory Pages*. http://www.nwo.usace.army.mil/Missions/Regulatory-Program/Wyoming/. Accessed June 2, 2017.

WYDEQ (Wyoming Department of Environmental Quality). 2017. http://deq.wyoming.gov/wqd/401-certification/resources/401-certifications-of-usace-404-dredge-and-fill-pe/. Accessed June 7, 2017.

Appendix R.
Stakeholder Involvement

This page is left intentionally blank.

Memo to File

August 16, 2016
Scoping Meeting
New Fork River Watershed, Level I Study

A scoping meeting for the New Fork River Watershed Master Plan, Level I Study, was held at the County Commissioners room in the Sublette county Courthouse at 7:00 AM on Tuesday, August 16, 2016. An attendance list is attached. Added to the bottom of the list were those in attendance, but not signed in – Mike Henn, SCCD; Ron Steg, Tetra Tech; and Mike Jackson and Mark Eatinger, Rio Verde Engineering.

The meeting was started by Ron Steg giving a summary power point presentation of the scope and objectives of the project. Introductions were included in the presentation. Slides from the presentation were requested by a member of the audience and will be placed on the SCCD website. Mike Henn spoke on behalf of the sponsor and Mike Jackson spoke about projects that the study was interested in to improve the health of the watershed.

Ron Steg passed around comment cards to be used by those present if they choose to submit a project at a later date. A question about types of projects needed was answered by Mike Henn with examples from the Upper Green River Study and by Mike Jackson with examples of irrigation system projects and conversions from flood to pivot.

Ron Steg covered the project/study schedule and timing. A question about how to submit projects and when was answered with contact information for Ron Steg, Mike Henn, and Mike Jackson. Ideally, projects would be submitted by this fall for design and cost estimates. However, projects submitted next spring would be looked at, too. The point made was that once the Level I Study was completed, any future project submitted would be eligible for funding through the Small Water Projects with the WWDC. However, those projects submitted now would have the advantage of engineering supplied by the Study.

Mike Henn and Andrew Linch discussed funding requirements and dollars. Small Water Projects cover projects less than $135,000 and 50 percent cost share. WWDC currently has $500,000 for small water projects. Shovel Ready Projects have highest priority and a good chance of being funded. Projects from this study could be submitted for the 2018 funding cycle if submitted prior to January 2018. SCCD would sponsor the project so the private land owners can get their projects funded.

GIS as a tool to be used by the Conservation district was discussed. Mike Jackson brought up the study requirements of 5 cfs flow for mapping and research.

One question of whether or not rural fire flow projects could be submitted was answered in the affirmative. Examples may be dry hydrants and holes in streams where helicopters could dip buckets.

Another question was whether or not this study would qualify all water used by the watershed irrigators and not just the adjudicated water right. The answer was only if the information was

available. Discussed crop utilization and return flows. One return flow was completed by John Wetstein in the 1980's on the New Fork River and another was completed recently on the East Fork. The letter thesis has not been published yet, but may be available.

One member had issue with new water rights taking away excess water from existing water right holders.

Another question was what ditches have telemetry that would detail excess water usage? Answer to be supplied at a later time.

Mark C. Eatinger
Rio Verde Engineering

SIGN-IN SHEET

New Fork River Watershed, Level 1 Study - Scoping Meeting - August 16, 2016

Name	Affiliation	Phone	Email
Andrew Linch	WWDO	307-777-6446	andrew.linch@wyo.gov
Eric STEEGE	STICK DITCH	307-360-[illegible]	[illegible]
Lake Sanders	SCCD / Producer		
Cody Sturman		307-231-2179	
Sylvia Sandoval	Moncrief Ranch	307-367-2371	
Roberto Sandoval	Moncrief Ranch	367-2371	
Randy Bolgiano	UERC	537-5280	
LESLIE HAGENSTEIN	PINE CREEK CANAL	307-231-9562	
	HAGENSTEIN RANCH		lhagenstein@wyoming.co
JIM ALBRITTON-MCDONALD		970 443-1462	JIMAMCD@HOTMAIL.COM
Madeleine Murdock		367-2222	
SID STANFILL	Bergs Ranch/Landowner	231-9596	SNSTANFILL@gmail.com
Jack Roberts	Highland	360 8393	
Mary Ann Menster	C.O	360-7127	maryann@menstercpa.com
Hilde Sexauer	WGFD	367-4352	hilde.sexauer@wyo.gov
Jim Meiring	Highland	360-8363	
Lathner Straley	Highland	231-4148	lstraley1@hotmail
KATHY RAPER	SCCD	360-7602	krapers@subtle[illegible]
Susan Berges Stanfill	NFLID	231-2555	suecow17@yahoo.com
Jennifer Hayward	NRCS	367-2257 x110	jennifer.hayward@wy.usda.gov
MIKE HENN	SCCD		
RON STEG	TETRA TECH		
MIKE JACKSON	RVE		
MARK EATINGER	RVE.		

(5 FROM SPONSOR, STATE, CONSULTANT) 23 TOTAL

SIGN-IN SHEET

New Fork River Watershed, Level 1 Study - Scoping Meeting - August 16, 2016

Name	Affiliation	Phone	Email
Andrew Linch	WWDO	307-777-6446	andrew.linch@wyo.gov
Eich Steege	Stien Ditch	307-360-8417	csteege@gmail.com
Luke Sanders	SCCD / Producer		
Cody Sturman		307-231-2179	
Gloria Sandoval	Mocroft Ranch	307-367-2371	
Roberto Sandoval	Mocroft Ranch	367-2371	
Randy Bolgiano	UERC	537-5280	
LESLIE HAGENSTEIN	PINEGREEL CANAL	307-231-9562	
	HAGENSTEIN RANCH		lhagenstein@wyoming.com
JIM ALBRITTON-MCDONALD		970 443-1462	JIMAMCD@HOTMAIL.COM
Madeleine Murdock		367-2222	
SID STANFILL	Briggs Ranch/Landowner	231-9596	SNSTANFILL@gmail.com
Jack Roberts	Highland	360 8393	
Mary Ann Menster	CO	360-7127	maryann@menstercpa.com
Hilda Sexauer	WGFD	367-4352	hilda.sexauer@wyo.gov
Jim Meining	Highland	360-8363	
Lamer Straley	Highland	231-4148	lstraley1@hotmail
Kathy Raper	SCCD	360-7608	Kraper@subletted.com
Susan Briggs Stanfill	NFLID	231-2555	suecow17@yahoo.com
Jennifer Hayward	NRCS	367.2257 x110	jennifer.hayward@wy.usda.gov

New Fork River Watershed Level I Study – Scoping Meeting

August 16, 2016

TETRA TECH

Meeting Purpose

- Familiarize watershed stakeholders, landowners, and other interested parties with the scope of the project, and to begin to obtain input from interested parties.

Discussion Topics

- Study area
- Project team/organization
- Project purpose
- Project tasks
- Schedule
- Opportunities to keep informed and get involved
- Ongoing Level 2 Study

Project Location/ Study Area

Entire New Fork River Watershed from the mouth at the confluence with the Green River to the headwaters in the Wind River Wilderness.

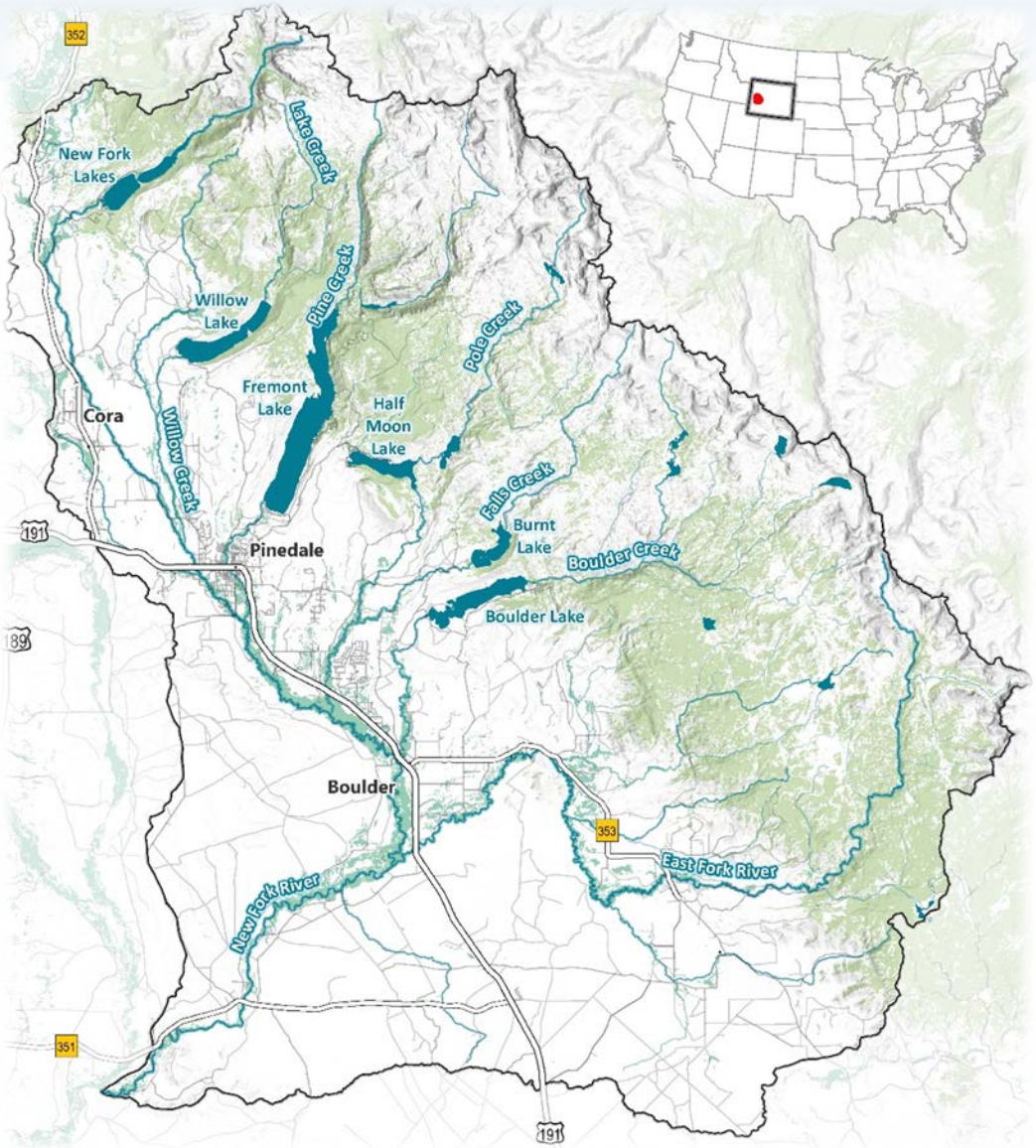

Project Team/Organization

Funding and Project Oversight

- Wyoming Water Development Office

Project Sponsor

- Sublette County Conservation District

Technical Team

- Tetra Tech, Inc. – Star Valley, Wyoming
  - Rio Verde Engineering – Pinedale, Wyoming
  - RJH Consultants, Inc. - Englewood, Colorado

Study Scope

- Inventory and evaluate the watershed with emphasis on surface-water quantity and quality and upland and riparian conditions.
- Evaluate current watershed function.
- Identify problem areas and propose improvement alternatives.
- Foster communication among residents and landowners, the SCCD, and the WWDC.
- Solicit public participation in the watershed study.
- Work with watershed stakeholders to pursue VOLUNTARY implementation of management practices that address the natural resource issues within the drainage

Primary Tasks

- Watershed Inventory and Characterization
- Watershed Management and Rehabilitation Plan

Watershed Inventory and Characterization

The objective of the inventory is to gather, compile, and review information to:

1. Describe current watershed condition and develop an understanding of watershed function
2. Identify potential problems, issues, and/or constraints associated with water availability and/or use
3. Identify water-development opportunities and improvements within the watershed.

Comprehensive Inventory

- Climate
- Vegetation and land cover
- Soils
- Geology
- Groundwater hydrology
- Surface water hydrology
- Water quality
- Wildlife
- Wetlands
- Fisheries
- Range conditions
- Oil and gas production
- Transportation
- Stream channel structure, morphology and stability
- Existing water systems
  - Irrigation
  - Municipal
  - industrial
- Existing wildlife and livestock water sources
- Existing reservoirs/water storage

Example water-development opportunities and improvements

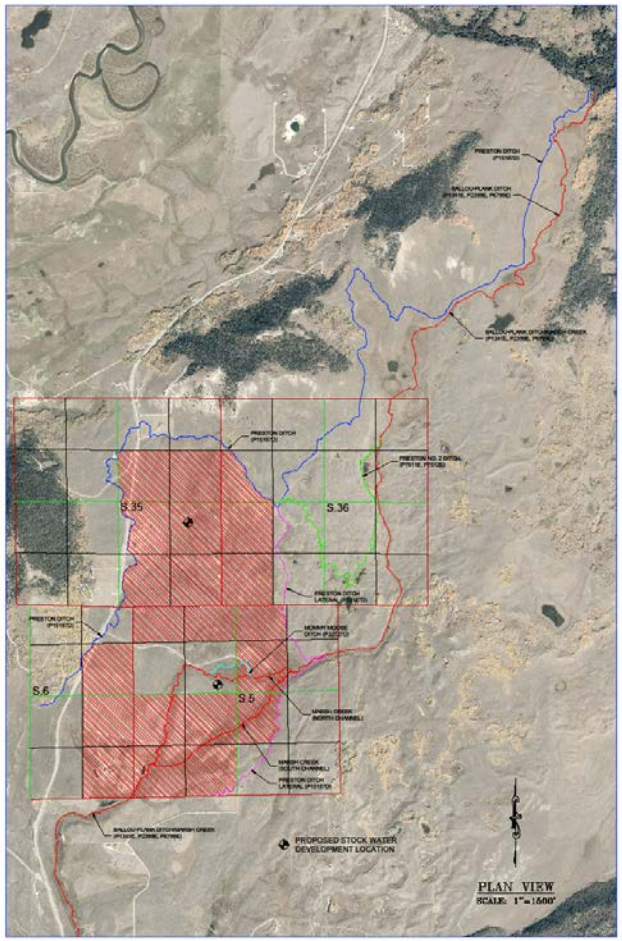

Watershed Management and Rehabilitation Plan

- Describe/prioritize potential alternative projects and management strategies to address water resource issues and water development opportunities identified in the watershed inventory.
  - Irrigation system rehabilitation components
  - Livestock/wildlife upland watering opportunities
  - Grazing management opportunities
  - Storage opportunities
  - Stream-channel condition and stability
  - Wetland enhancement opportunities
  - Other watershed management opportunities.
- Concept level cost estimates
- Identify permits, easements, and clearances necessary for plan implementation
- Identify funding sources

Opportunities to keep informed and get involved

- Scoping Meeting
- 6 Project Meetings
- Website http://www.sublettecd.com/
- Facebook https://www.facebook.com/SubletteCD/
- One-on-one meetings

Schedule

- July 2016 through November 1, 2017
- Draft report by September 1, 2017
- Final report by November 30, 2017

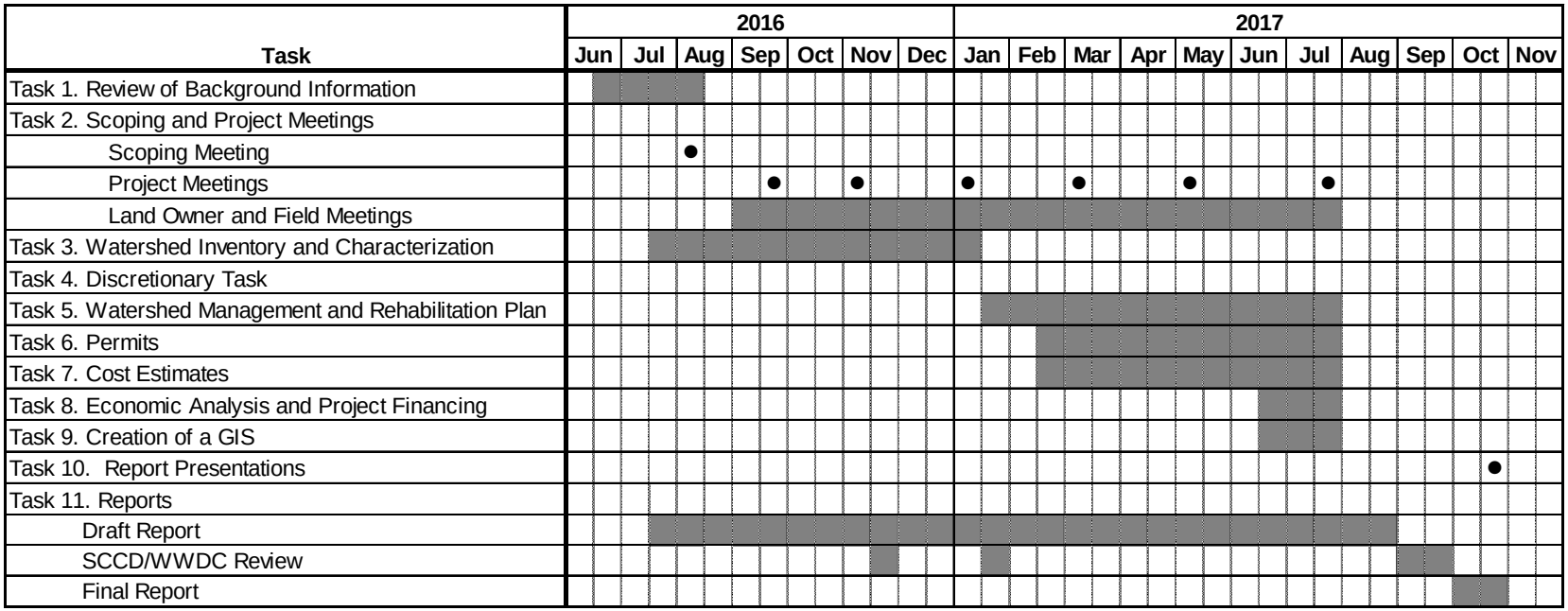

Ongoing Level 2 Study

- Identified if water was available to store and existing shortages
  - Entire New Fork River basin
- Identified Reservoir size required to meet needs 8 out of 10 years for New Fork Irrigation District
- Evaluated additional storage at New Fork lake and other potential alternatives
- Work will be completed in Fall of 2016

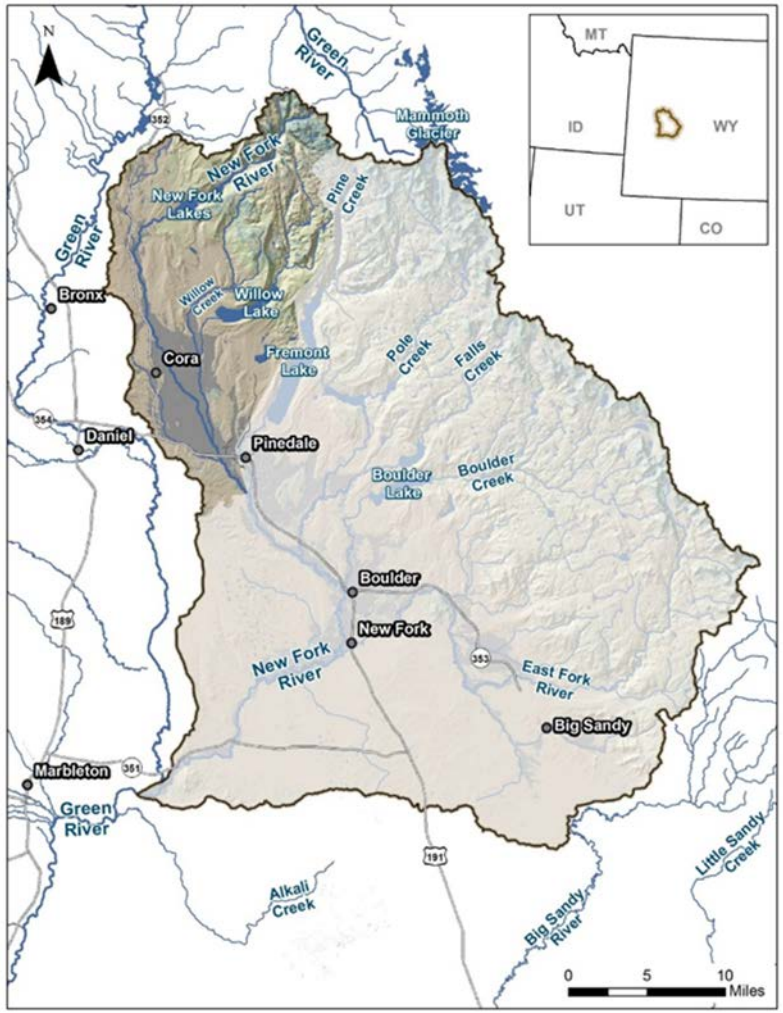

Questions

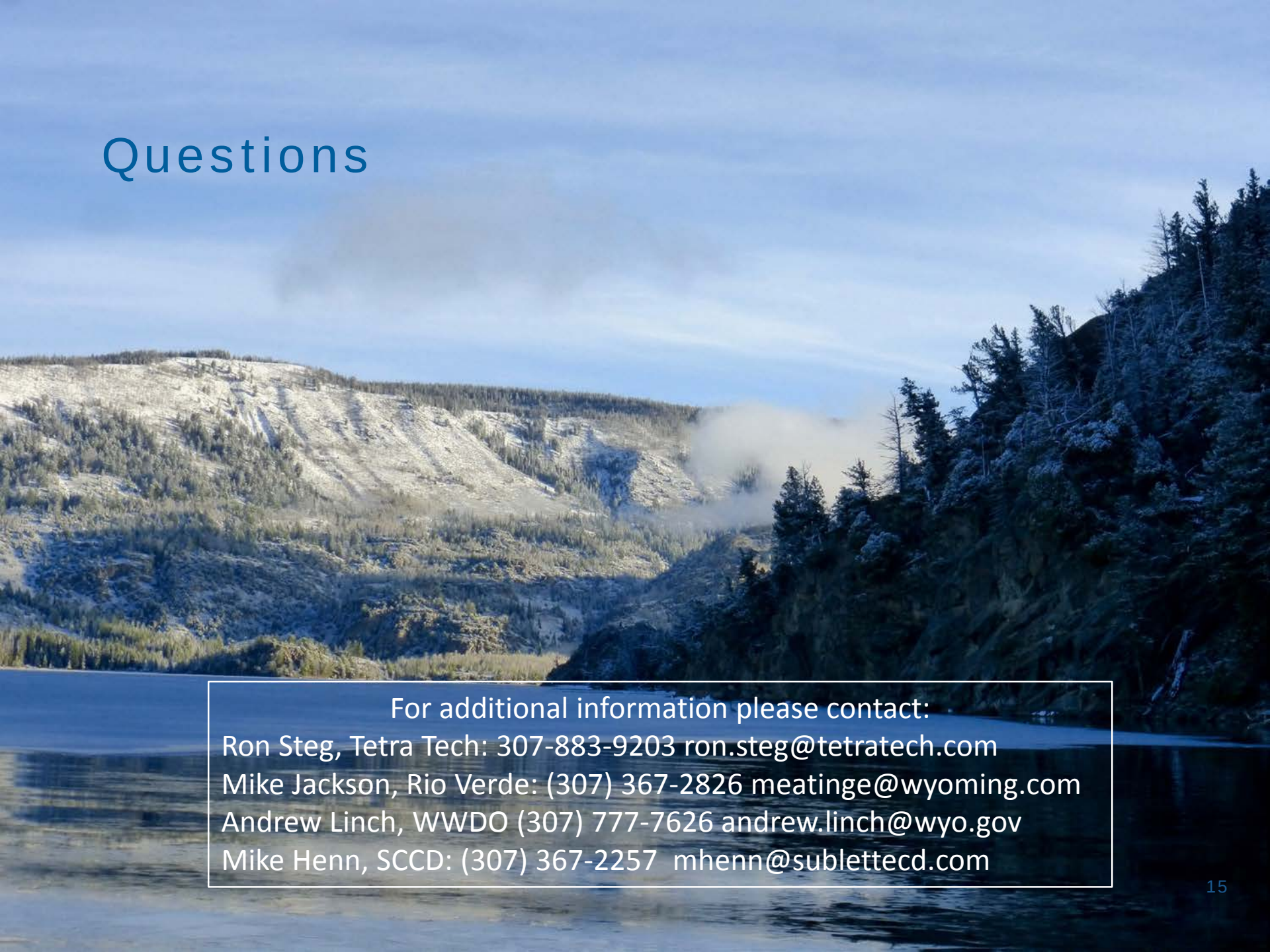

For additional information please contact:

Ron Steg, Tetra Tech: 307-883-9203 ron.steg@tetratech.com

Mike Jackson, Rio Verde: (307) 367-2826 meatinge@wyoming.com

Andrew Linch, WWDO (307) 777-7626 andrew.linch@wyo.gov

Mike Henn, SCCD: (307) 367-2257 mhenn@sublettecd.com

TETRA TECH

MEMO

To:	New Fork River Watershed Level 1 Study File
From:	Ron Steg, Tetra Tech
Date:	April 26, 2017
Subject:	New Fork River Watershed Level 1 Study: April 25, 2017 Informational Meeting Notes

This memorandum provides a summary of the informational meeting held at the BLM Pinedale Field Office at 1625 W Pine St, Pinedale, Wyoming on April 25, 2017. The purpose of the meeting was to provide a status update, solicit input from watershed stakeholders to identify watershed problem areas and improvement options (i.e., projects), and to demonstrate a beta version of the New Fork River Water Right & Conveyance Mapping Tool ("New Fork WRCMT") that was developed to provide watershed stakeholders with easy access to water rights information in the New Fork River watershed.

A copy of the sign in sheet is attached.

Ron Steg provided a project status report via a PowerPoint presentation (attached) and then worked with Mike Jackson from Rio Verde Engineers to demonstrate the WRCMT. No substantive questions were asked during the meeting, however, there was a great deal of interest in the WRCMT. It was pointed out that the WRCMT will be made available through the Sublette County Conservation District at the completion of the project.

Tetra Tech
P.O. Box 11895 Jackson Hole, WY 83127
Tel 307-883-9203

SIGN-IN SHEET

New Fork River Watershed, Level 1 Study - April 25, 2017

Name	Affiliation	Phone	Email
Joe Gillis	Boulder Irr. District	537-5858	jrgillis@wildblue.net
Mike Jackson	Rio Verde Engr.	367-2826	rioverde@wyoming.com
Michael Henn	SCCD		
Melanie Purcell	SCCD	367-2257	mpurcell@sublettecd.com
Shari Meeks	SCCD	367-2257	smeeks@sublettecd.com
Jennifer Hayward	NRCS	367-2257 x110	jennifer.hayward@wy.usda.gov
Jay Ufford	Pinedale Roundup	367-3208	jufford@pinedaleroundup.com
Courtney Skinner	State Engineers	231-2769	[illegible]
Andrew Linch	WWDO	307-777-6446	andrew.linch@wyo.gov
Stephanie Hauk	SPID	307-231-1711	mhanker212@aol.com
Susan Briggs Stanfill	N Fork Lake Irrig	307 231 2555	suecow17@yahoo.com
Rita Donham	landowner	307 231 1326	Roof@wyomingaeroplane.com
MS Murdock	"	307 367 2222	madelinestan@hotmail.com

New Fork River Watershed
Level I Study – Informational Meeting

April 25, 2017

RJH CONSULTANTS, INC.

RIO VERDE ENGINEERING
CONSULTING ENGINEERS AND LAND SURVEYORS

TETRA TECH

Meeting Purpose

- Provide a status update
- Solicit input to identify watershed problem areas and improvement options (i.e., projects)
- Discuss next steps

May 1st Deadline for new projects !

Project Location/ Study Area

Entire New Fork River Watershed from the mouth at the confluence with the Green River to the headwaters in the Wind River Wilderness.

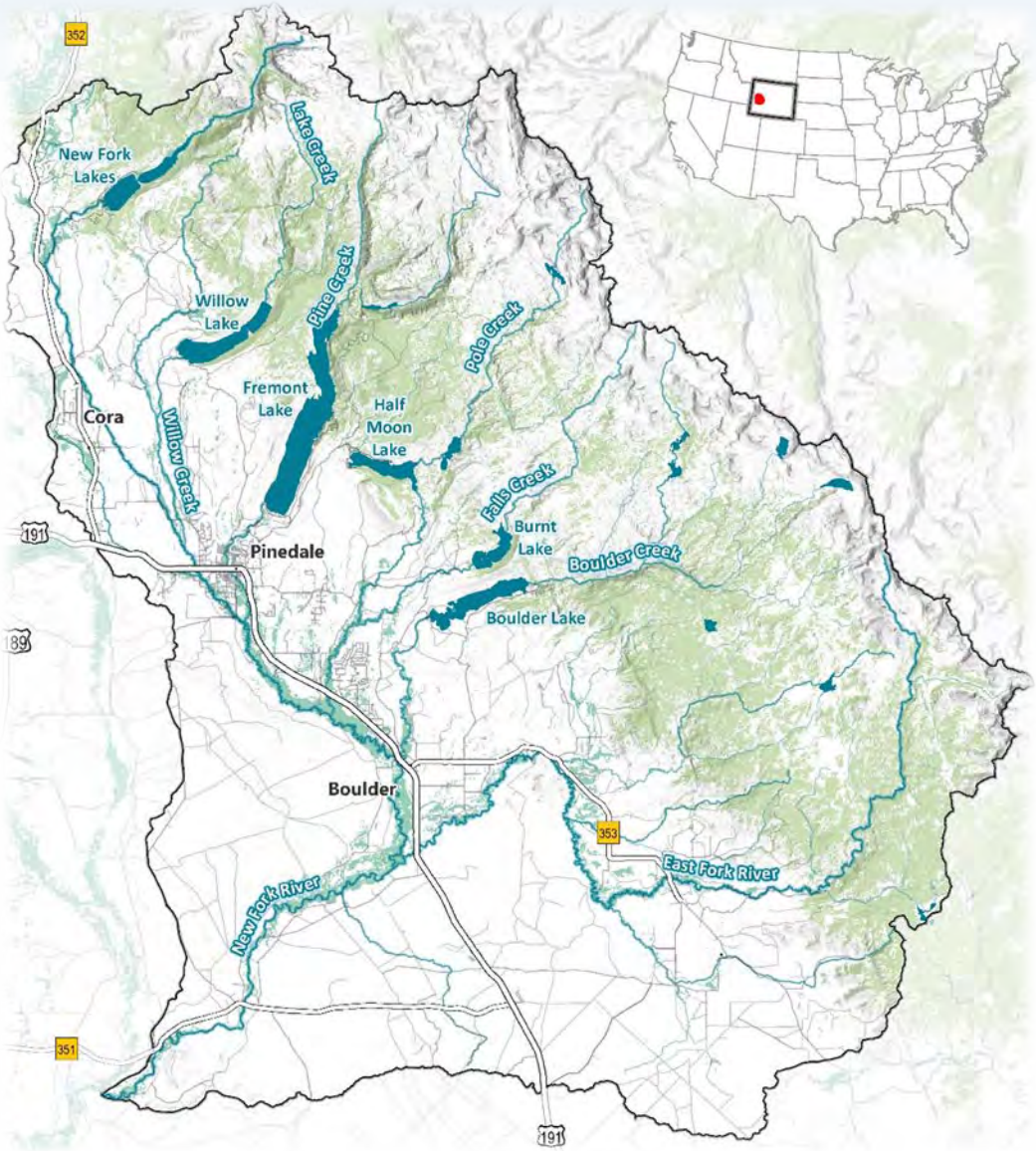

Primary Tasks

1. Watershed Inventory and Characterization
2. Watershed Management and Rehabilitation Plan

The objective of the Inventory is to gather, compile, and review information to:

1. Describe current watershed condition and develop an understanding of watershed function

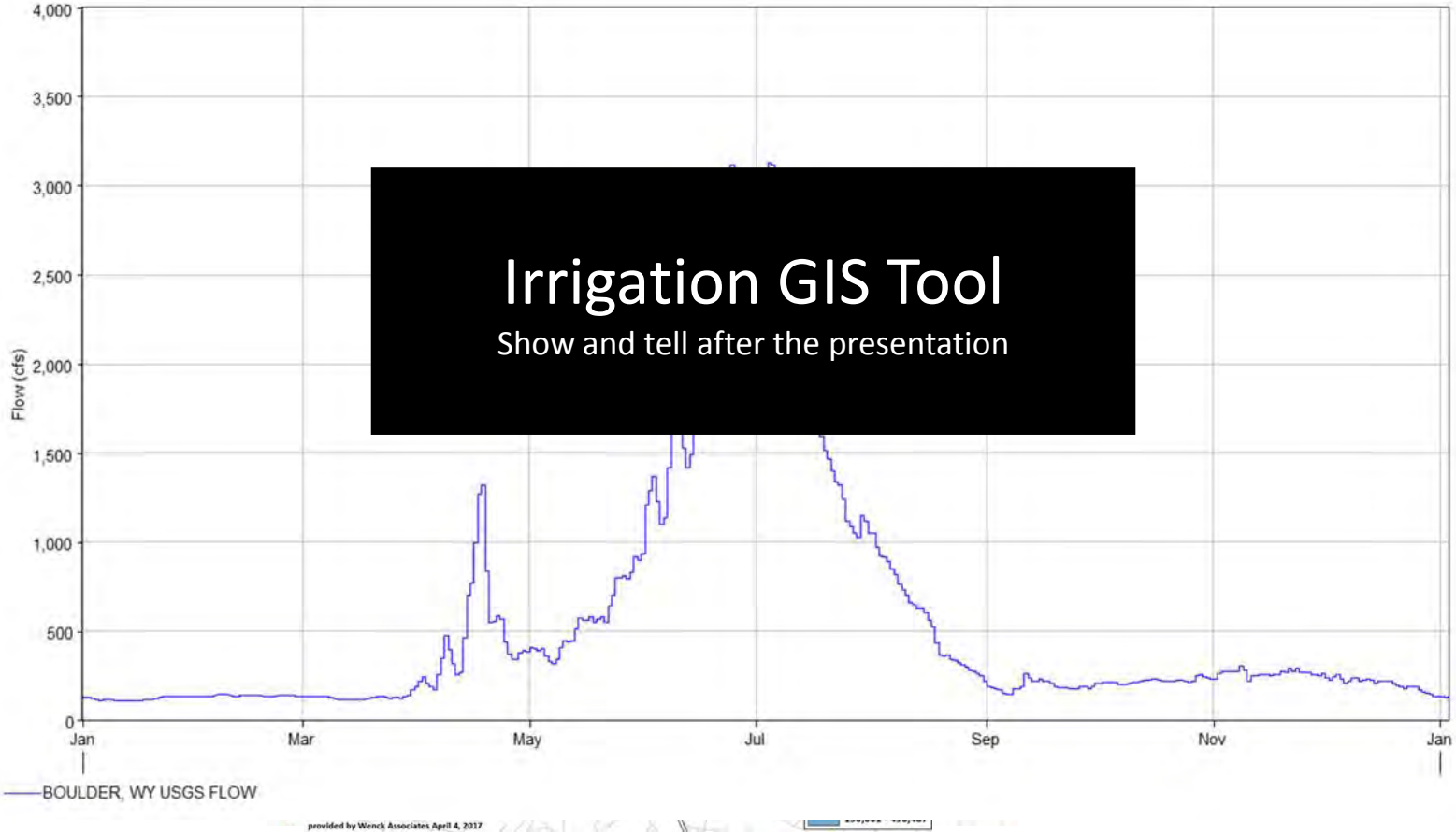

Irrigation GIS Tool

Show and tell after the presentation

The objective of the Inventory is to gather, compile, and review information to:

2. Identify water-development opportunities and improvements within the watershed.

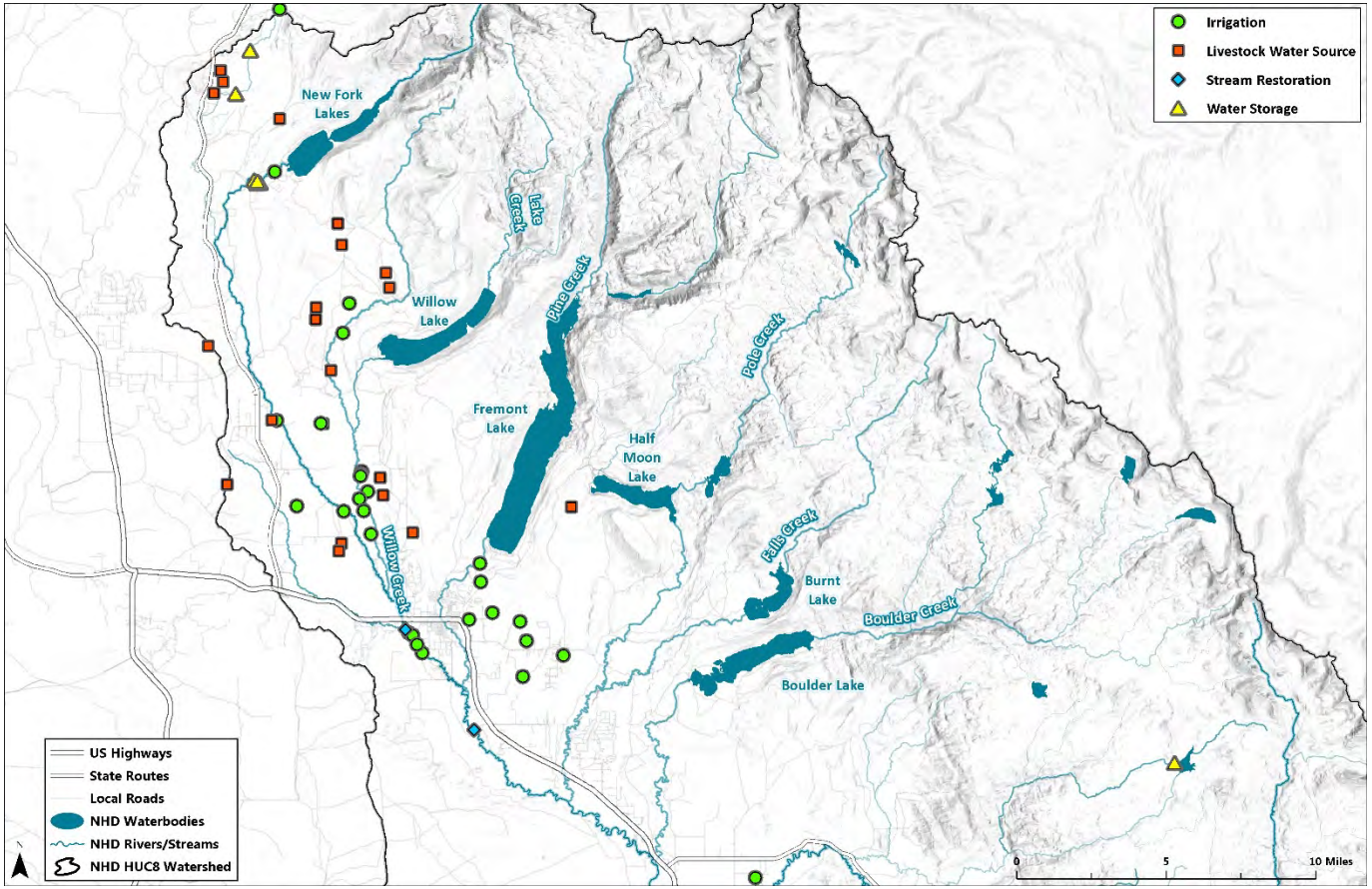

Example Projects

Example Projects

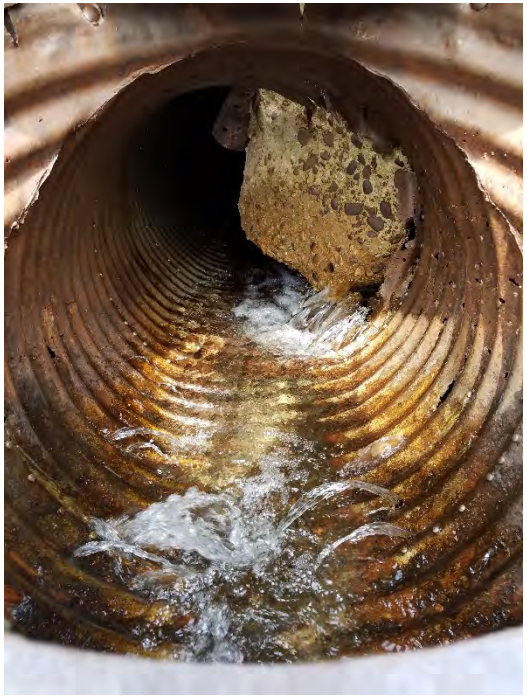

The objective of the Inventory is to gather, compile, and review information to:

3. Identify potential constraints, problems, and/or issues, associated with water availability and/or use

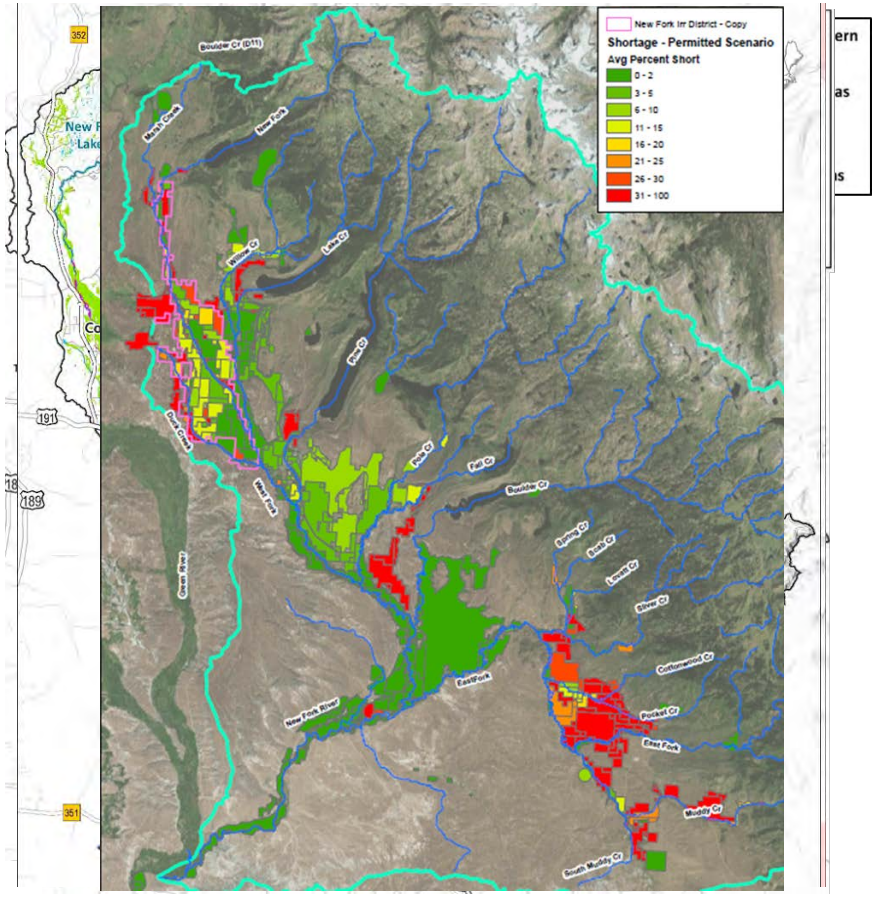

Project Prioritization

Evaluate and prioritize each project relative to benefits, impacts, and constraints including…

Watershed Benefits

- Projects with a positive impact to watershed function, and/or benefit a large number of people/large area will be scored high.
- Projects that benefit only a small number of people and have only localized benefits will be ranked low.

Cultural Resources

If a project is located within or adjacent to any known cultural sites, coordination with the SHPO will be necessary. These sites will be ranked lower than sites that do not intersect cultural resources.

- National Register of Historic Places (NRHP)
- Eligible for Listing
- Eligibility Unknown
- Not eligible

Big Game

Consider the potential for impacts to big game to be greatest in "crucial" wildlife habitat (crucial winter and crucial winter/yearlong) and within the mule deer migratory corridor.

Fisheries

Fisheries will be evaluated based on the combination of factors:

1. The presence/absence of and potential impact to rare species
2. The productivity of the trout fishery
3. Streamflow class
4. Benefit to fishery

Sage Grouse

Potential impacts/constraints if projects are located within CORE area.

Photo from Pacific Southwest Region USGS

Sensitive Species

- Federally listed Endangered or Threatened species
- BLM, USFS, or Wyoming Sensitive Species

Specially Designated Lands

Additional layers of oversight/regulation may be imposed for activities located on specially designated lands.

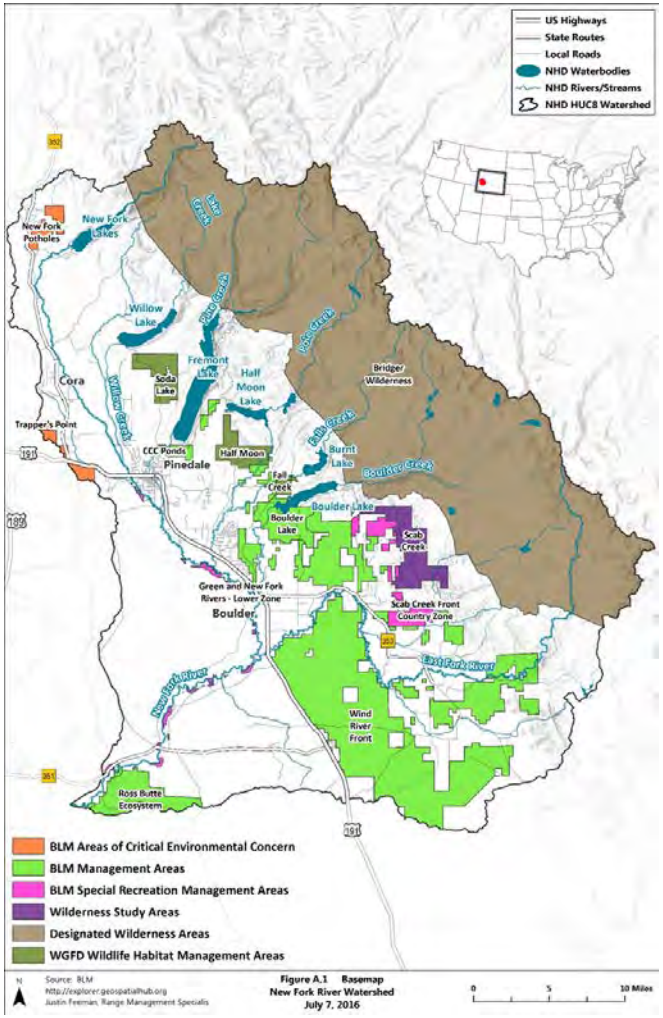

Wetland Impacts

- Projects that encroach on wetlands
- Projects that impact wetland hydrology

Public Acceptability

- Projects ranked high will have high public support.
- Conversely, those that are ranked low will likely have little public support and may be actively opposed.

Shovel Ready

"Shovel ready" projects include those where planning and engineering is advanced enough that with sufficient funding, construction can begin within a very short time.

Sustainability

- Projects ranked high will require little long-term maintenance and are expected to continue to function for a relatively long period of time.
- Conversely, projects ranked low will require considerable maintenance and/or will likely have only short-term benefits.

Small Water Project Program Priorities

In order, the priorities are:

1. Source water development
2. Storage
3. Pipelines, conveyance facilities, solar platforms, and windmills
4. Irrigation
5. Environmental

Next Steps

- Finalize Watershed Inventory/Characterization
  - Identify additional projects
  - Final project prioritization
- Watershed Management and Rehabilitation Plan
  - Preliminary engineering
  - Costs
  - Permits
  - Funding
  - Report

May 1st Deadline for new projects !

Schedule

- July 2016 through November 1, 2017
- Draft report by September 1, 2017
- Final report by November 30, 2017

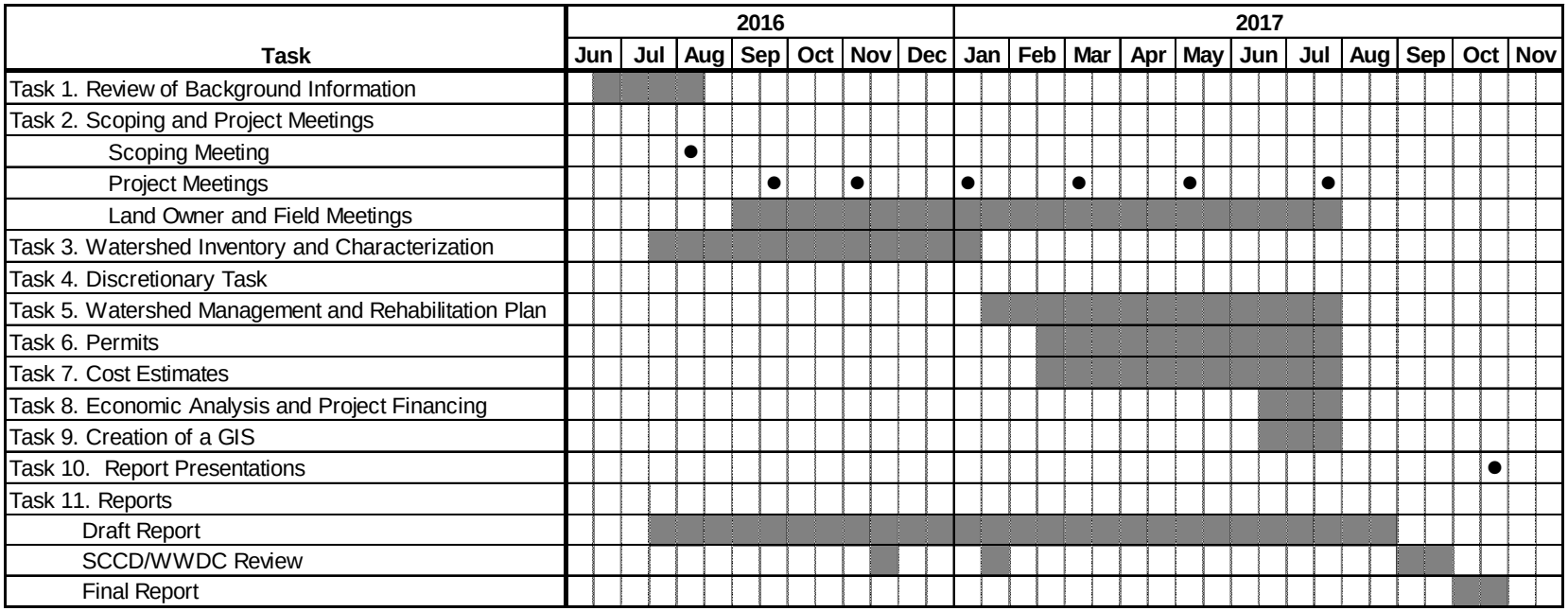

Next Meeting – Reservoir Projects

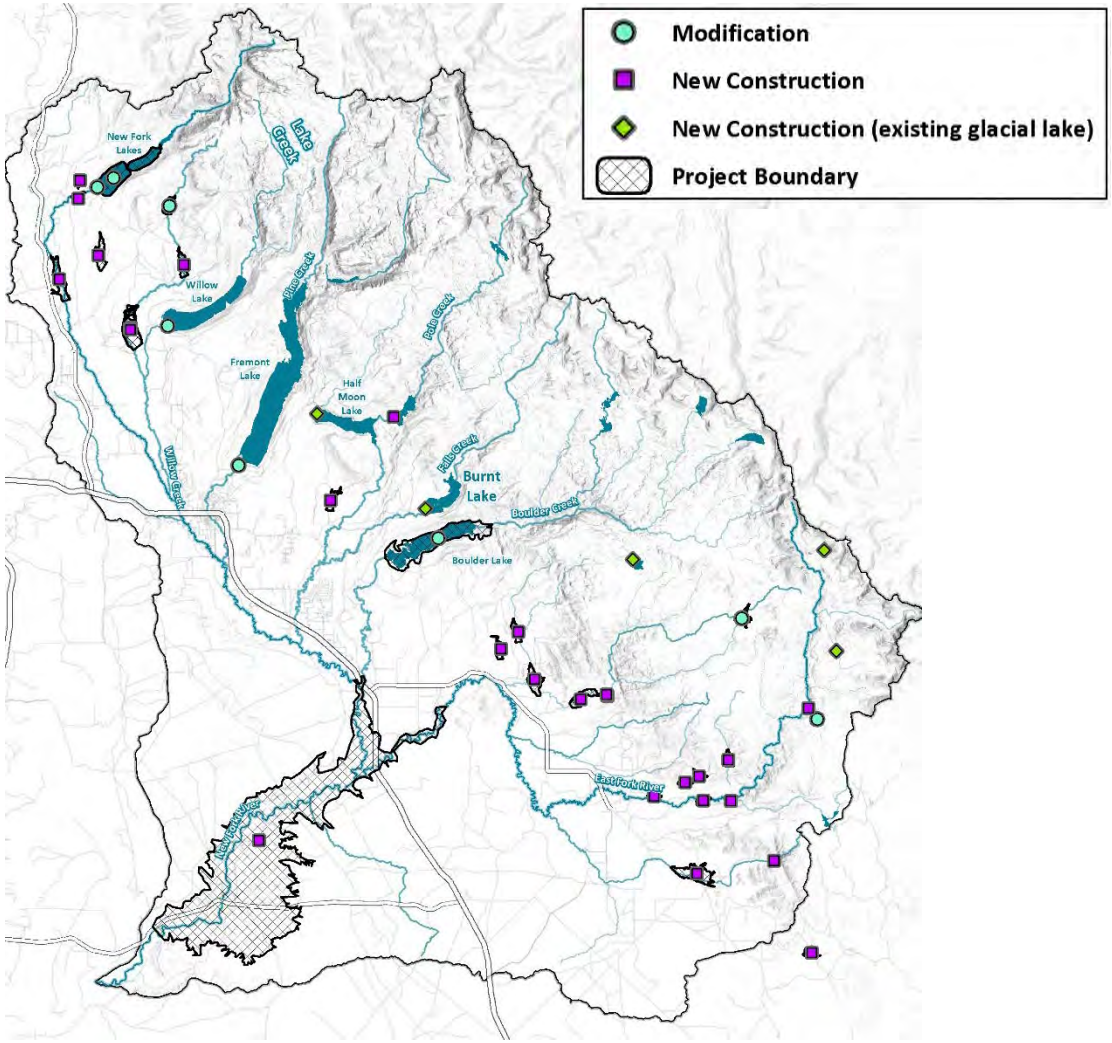

Questions

- Website http://www.sublettecd.com/
- Facebook https://www.facebook.com/SubletteCD/

For additional information please contact:

Ron Steg, Tetra Tech: 307-883-9203 ron.steg@tetratech.com

Mike Jackson, Rio Verde: (307) 367-2826 mjackson@rioverdeengineering.com

Andrew Linch, WWDO (307) 777-7626 andrew.linch@wyo.gov

Mike Henn, SCCD: (307) 367-2257 mhenn@sublettecd.com

Imagery Date: 9/10/2016
lat 42.863555° lon -109.791071° elev 7248 ft

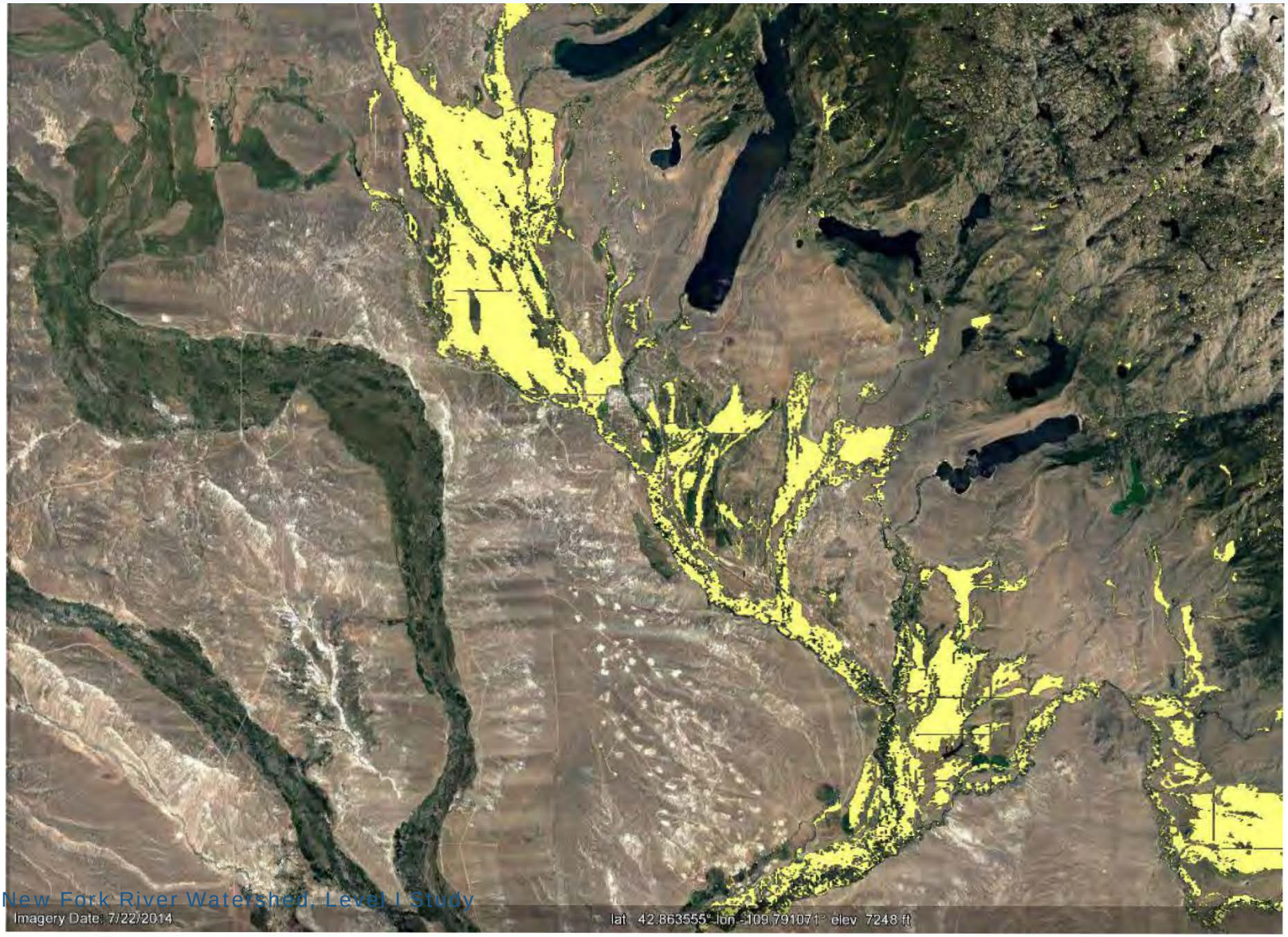
Imagery Date: 7/22/2014
lat 42.863555° lon -109.791071° elev 7248 ft

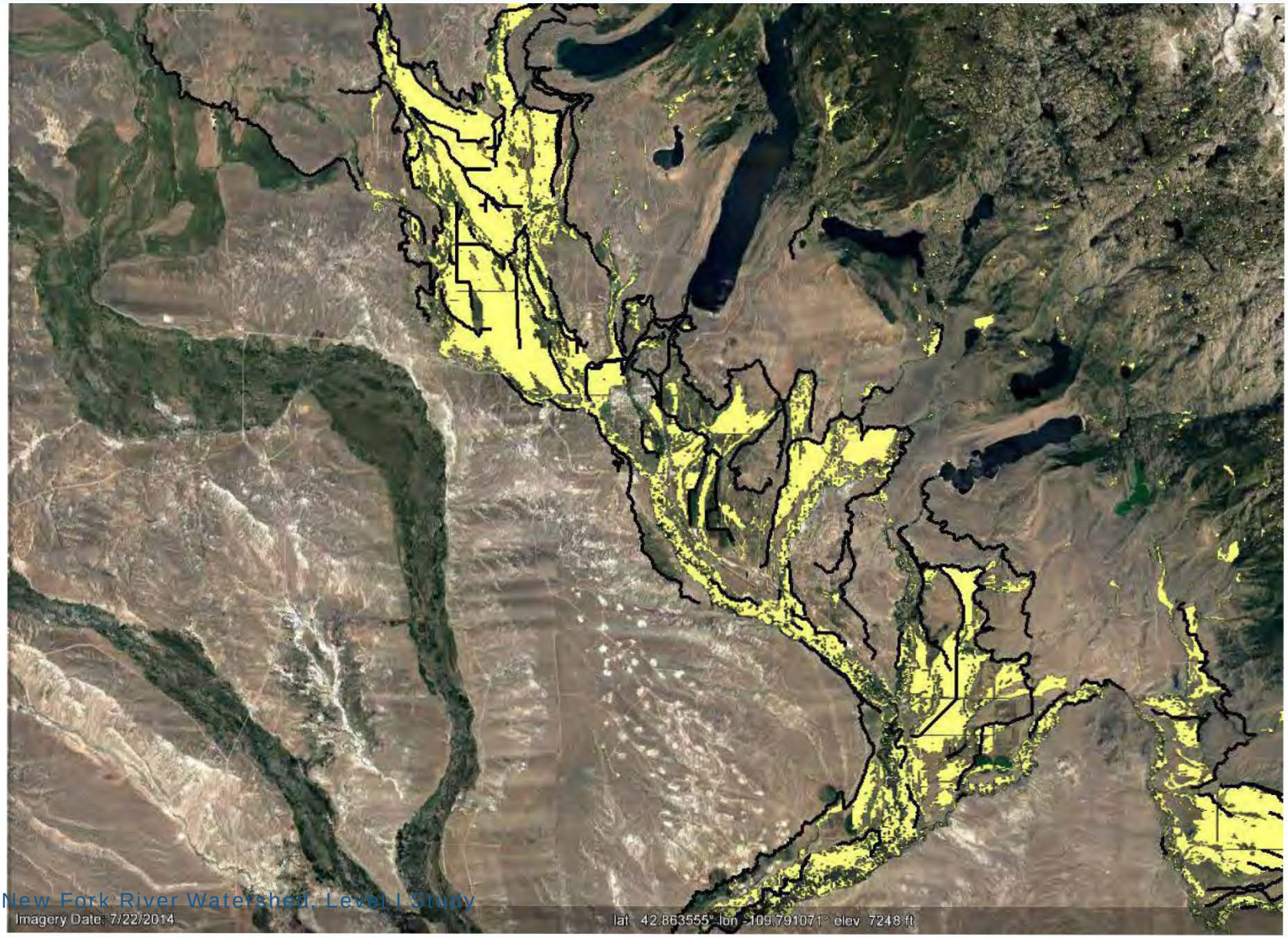
Imagery Date: 7/22/2014
lat 42.863555° lon -109.791071° elev 7248 ft

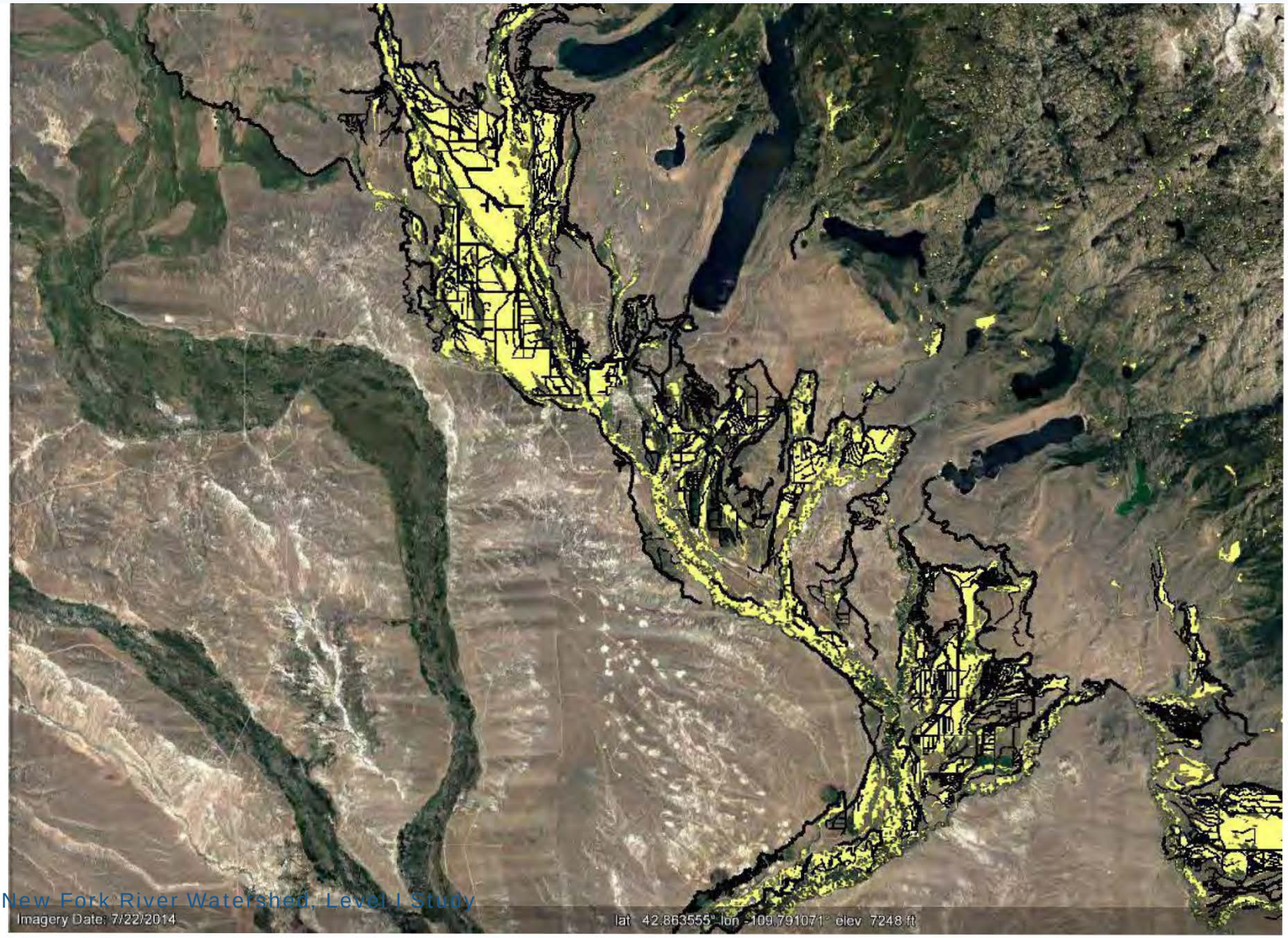
Imagery Date: 7/22/2014
lat 42.863555° lon -109.791071° elev 7248 ft

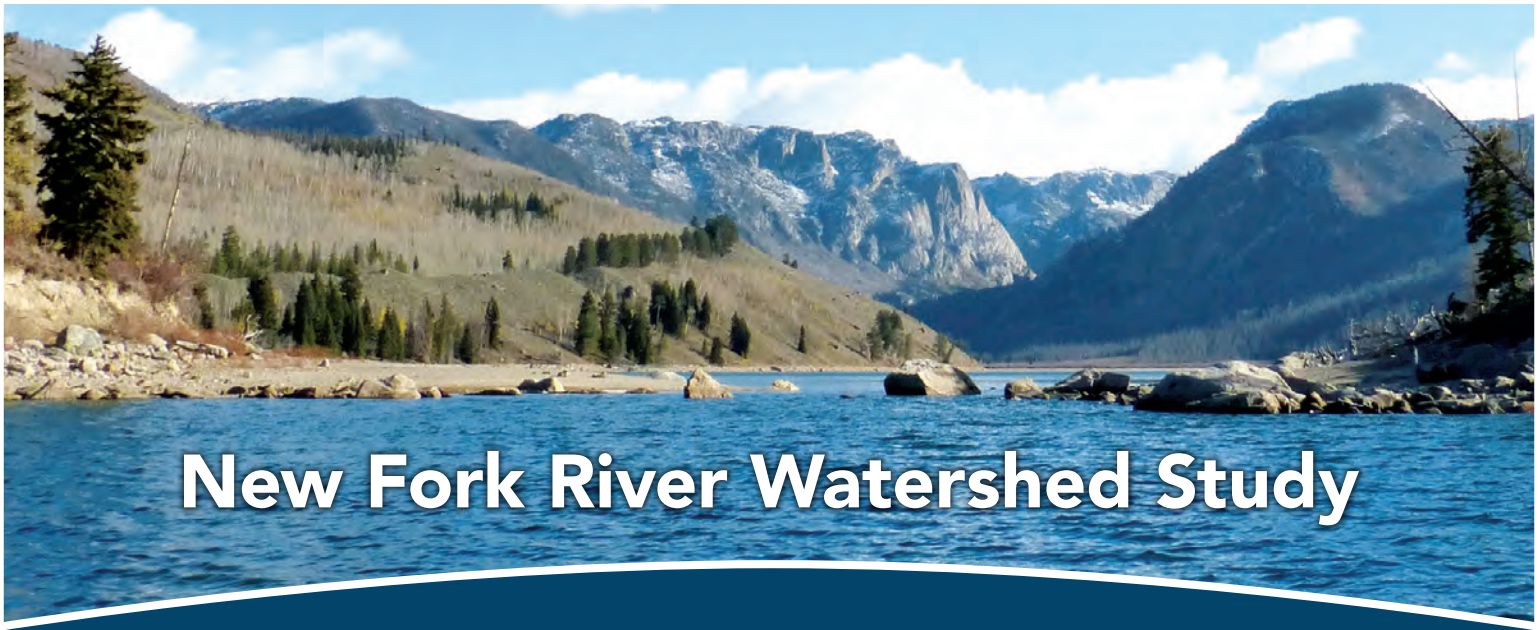

New Fork River Watershed Study

Public Informational Meeting in Pinedale

April 25, 2017 • Mid-Day Meeting — 1:00 PM

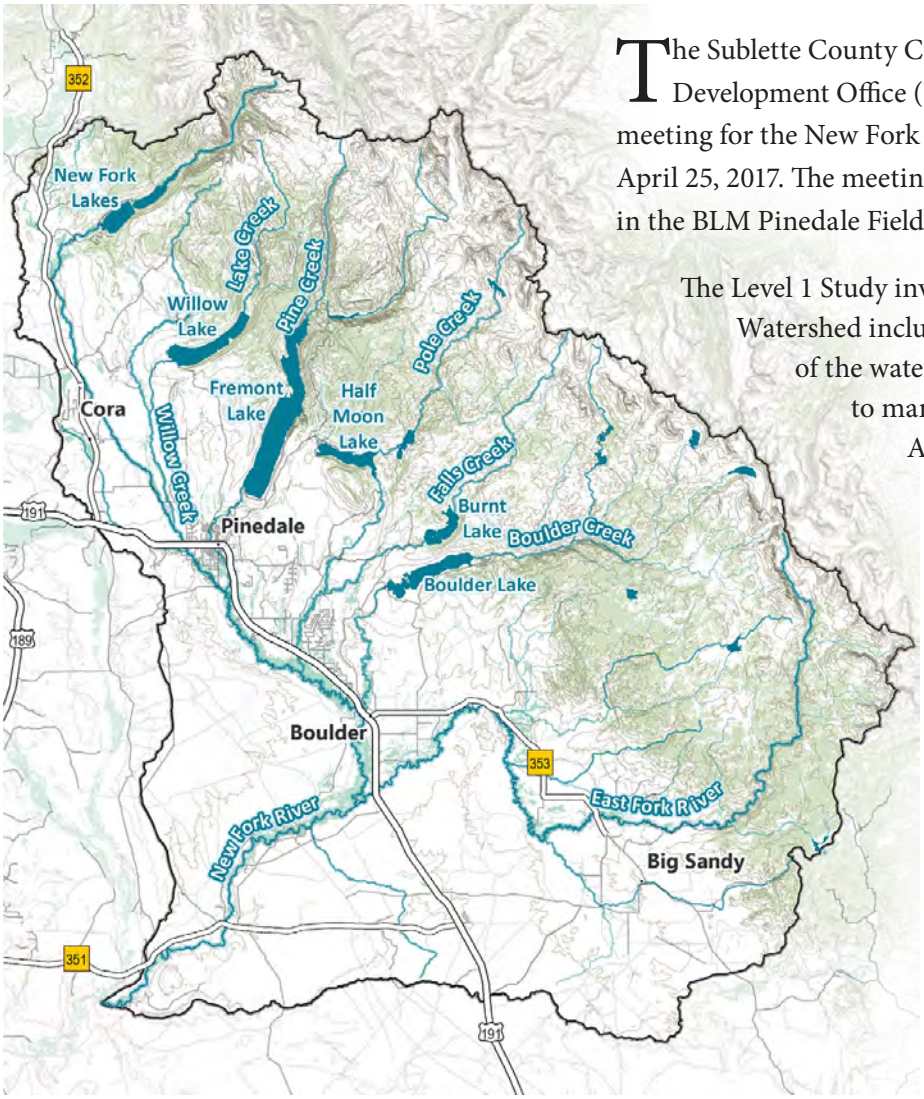

The Sublette County Conservation District (SCCD) and Wyoming Water Development Office (WWDO) are holding a public informational meeting for the New Fork River Watershed Level 1 Study at 1:00 PM on April 25, 2017. The meeting will be held in the "Rendezvous Room" located in the BLM Pinedale Field Office at 1625 W Pine St, Pinedale, Wyoming.

The Level 1 Study involves a comprehensive look at the New Fork River Watershed including an evaluation of the land and water resources of the watershed; as well as the infrastructure employed to manage water supply and use. At our meeting last August, we introduced the project. At this meeting we will provide preliminary results and discuss proposed management practices that address natural resource issues within the drainage.

After a brief presentation, we will be available to discuss potential projects as a group, or one-on-one. Be ready to roll your sleeves up by coming to the meeting with your project ideas, maps, drawings, or plans if you have them.

For questions please contact:

Mike Jackson,
Rio Verde Engineering
307-367-2826

Mike Henn,
SCCD
307-367-2257

Andrew Linch,
WWDO
307-777-7626

Ron Steg,
Tetra Tech
307-883-9203

Find more information on Facebook at https://www.facebook.com/SubletteCD/

MEMORANDUM

Project 15118

TO: Andrew Linch - Wyoming Water Development Commission

FROM: Rodney Eisenbraun, P.E. - RJH Consultants, Inc.

DATE: August 8, 2017

RE: New Fork Lake Dam Enlargement, Level II Study
Public Progress Meeting Minutes June 12, 2017

Attendees

See attached sign-in list.

Purpose

The purpose of this memorandum is to provide a summary of the items discussed during the progress meeting held on June 12, 2017 in Pinedale, Wyoming to discuss the New Fork Lake Dam Enlargement, Level II Study (Project). This memorandum is not intended to be a verbatim account of what transpired at the meeting but to provide a summary of items and decisions during the meeting.

Introduction

The purposes of the meeting were to discuss the work performed since the progress meeting held in Pinedale:

- General Project Overview
- Phase I Summary
- Draft Phase I Report Comments
- Phase II Activities

The meeting was a guided presentation by RJH Consultants, Inc. (RJH), Rio Verde Engineering, and the Wyoming Water Development Commission (WWDC) staff; however, throughout the presentation there were discussions with all meeting participants including local participants and Wyoming Game and Fish. Questions were asked and answered throughout the presentation. Slides from the presentation are attached for reference.

Schedule

The next phase (Phase II) of the Project consists of additional investigations into the preferred alternative to lower the inlet at New Fork Lake Dam and includes a Geotechnical Investigation. The Level II Phase II Draft Report will be provided in June 2018.

Questions and Responses

Folowing is a summary of questions that were asked along with the associated response *(in italics)*.

What is the current storage in New Fork Lake?

Response: The current storage is about 20,000 acre-feet. The proposed storage increase is 9,400 acre-feet.

Why is the storage increase based on an 8- out of 10-year yield?

Response: The firm yield accounts for carryover storage and is a function of available flow and capacity of the reservoir, and is not based on irrigation shortages or actual demands. This is how the state of Wyoming analyzes storage shortage.

Why were three grant funding levels evaluated? Isn't the typical WWDC grant 67 percent for this type of project?

Response: The District would need to apply for a WWDC grant to determine the actual grant percentage.

Does the proposed storage increase include the upper and lower lakes?

Response: Yes the narrows would be dredged to hydraulically connect the upper and lower lakes.

Is it possible to dredge the bottom of the lake to increase storage?

Response: Yes but this is not very practical from a cost or feasibility standpoint. The dredged material would also need to be placed somewhere.

RWE/jmm

Sign-In-Sheet
New Fork Dam - Enlargement Study
New Fork Irrigation District
June 12, 2017

Name	Representing	Phone / email
Mike Jackson	Rio Verde Engr.	307-367-2826 rioverde@wyoming.com
Jerry Gerard	Citizen Rane	307 367 4677
Jennifer Hayward	NRCS	307.367.2257 x110 jennifer.hayward@wy.usda.gov
Rod Eisenbraun	RJH	303 225-4611 reisenbraun@rjh-consultants.com
Andrea Christiano	RJH	915-484-8546 achristiano@rjh-consultants.com
Sue Briggs Stanfill	New Fork lake Irrig. Dist.	307 231 2555 suecow17@yahoo.com
Madeleine Murdock	NFLID	307.367.2222 madeleinestan@hotmail.com
Jim Mitchell	Sublette Emergency Mgt.	307 367 2254 jmitchell@subso.com
Pete Cavalli	WGFD	360-7441 Pete.Cavalli@wyo.gov
Luke Schultz	Game + Fish	367-4353 xt 243 luke.schultz@wyo.gov
Ron STEG	Tetra tech	406 401 6300 ron.steg@gmail.com
ED FRIEND	RJH	303 225 4611 efriend@rjh-consultants.com
BRENA SHERIDAN	RJH	303 225 4611 bsheridan@rjh-consultants.com

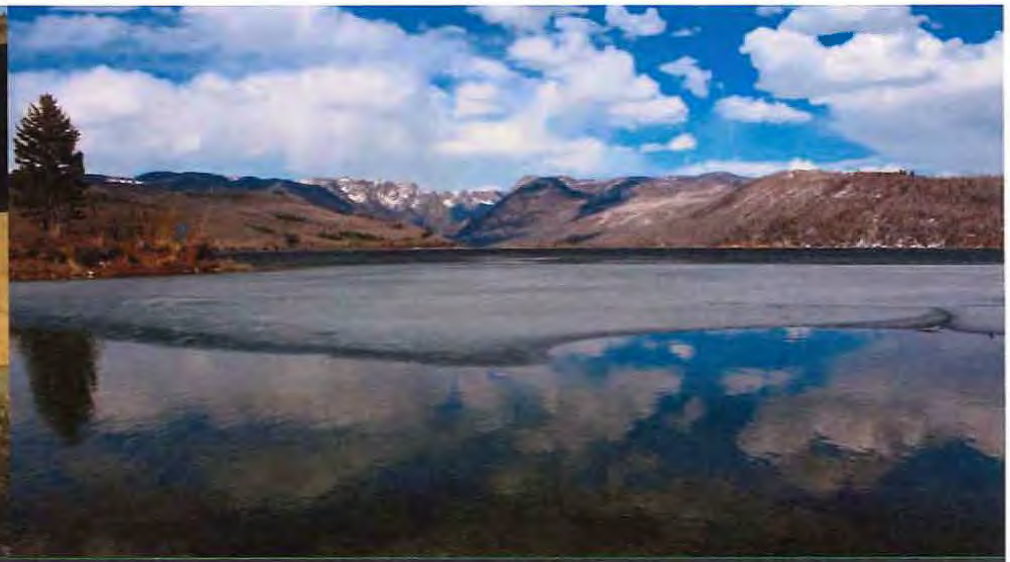

New Fork Lake Dam Enlargement Level II Phase II Study

PUBLIC MEETING

JUNE 12, 2017

PINEDALE, WYOMING

RJH CONSULTANTS, INC.

WEST Inc.

WENCK ASSOCIATES

RIO VERDE ENGINEERING PINEDALE, WYOMING

Introductions

Andrew Linch – WWDC

Rod Eisenbraun – RJH

Edwin Friend – RJH

Brena Sheridan - RJH

Mike Jackson – Rio Verde

Agenda

- Project Overview
- Phase I Summary
- Draft Report Comments
- Phase II Activities

Project Overview

- Investigate the Feasibility of Increasing Storage Capacity
- Enhance the Outlet Works
- Digitally map Parcels and Water Rights
- Assess the Integrity of the Dam

Phase I Summary - Hydrology

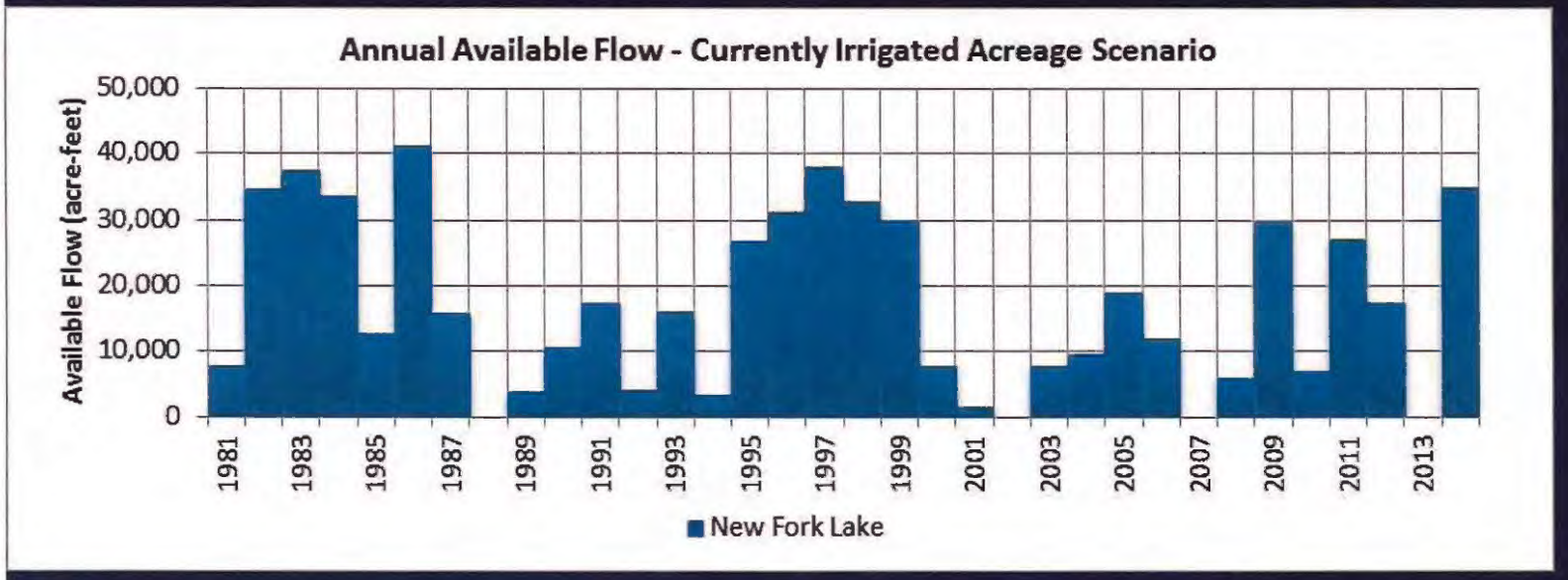

Average Annual Available:
11,200 AF

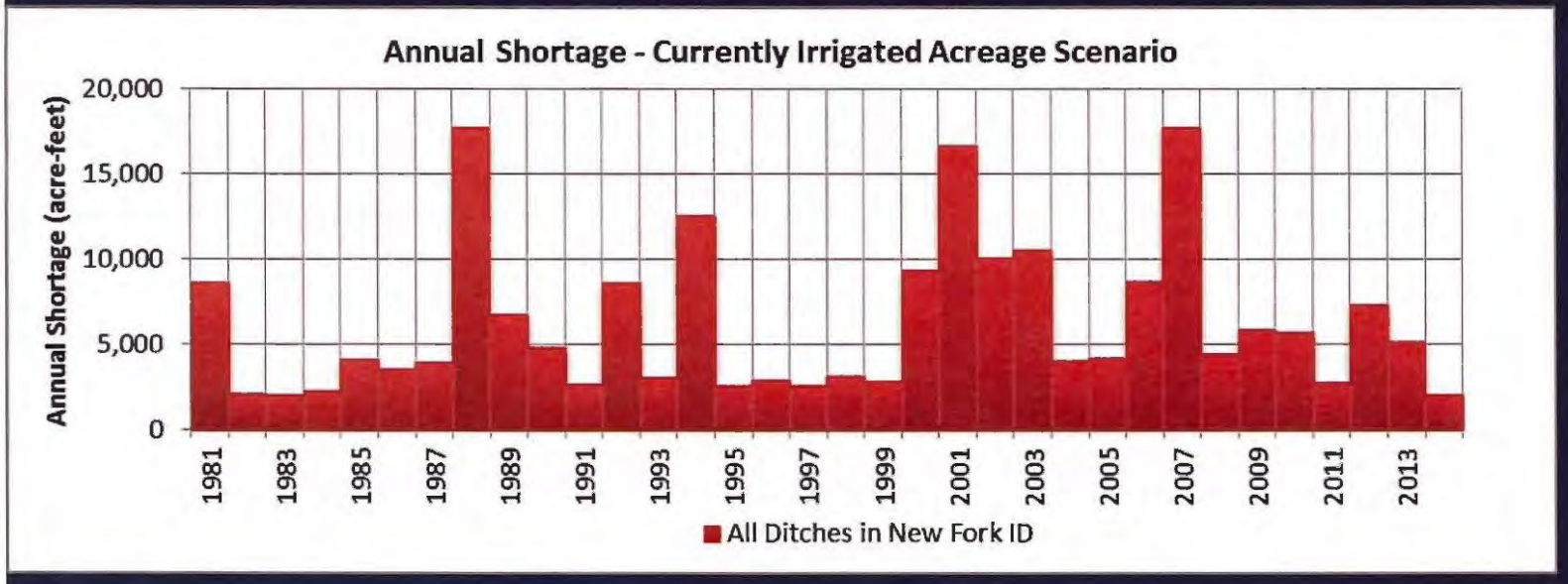

Average Annual Shortage:
6,700 AF

Phase I Summary - Storage Benefits

- 9,400 ac-ft reservoir results in about 3,000 ac-ft of yield 8 out of 10 years

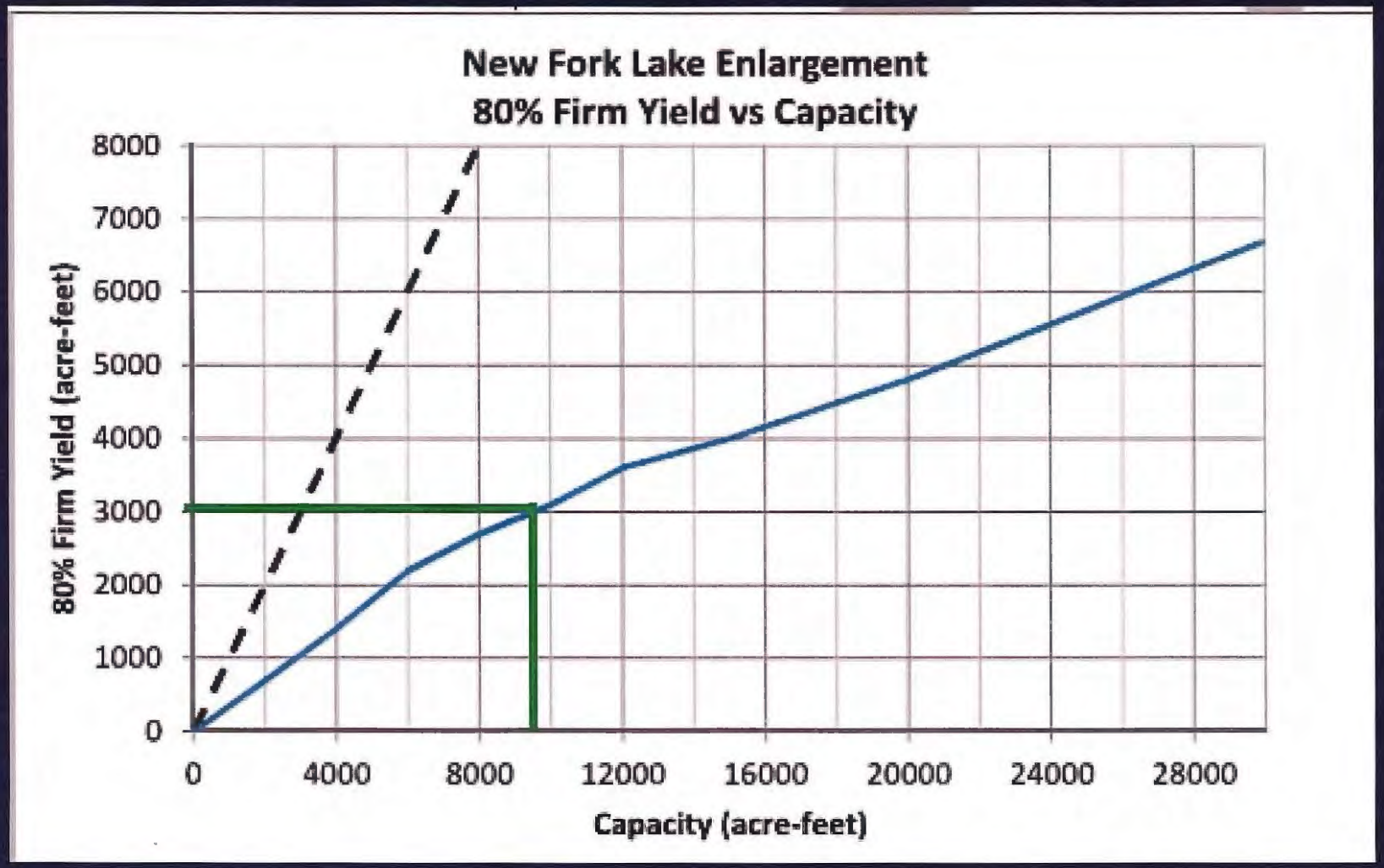

Phase I Summary - Screening

Alternative	Storage	Filling Conveyance	Water Delivery	Geotechnical Feasibility	Downstream Risk	Recreation	Willing Owner	Cultural Resources	Fisheries	Wet
	15	15	15	15	20	20	15	15	15	
New Fork Off Channel	3.2	1.0	3.0	4.0	4.0	6.0	5.0	7.0	5.0	9
New Fork Lake - Lower Inlet	10.0	10.0	10.0	8.0	8.0	7.0	8.0	6.0	7.0	1
New Fork Lake - Raise Dam	10.0	10.0	10.0	6.0	7.0	8.0	8.0	6.0	7.0	3
New Fork Lake - Raise Dam & Lower Inlet	10.0	10.0	10.0	7.0	7.0	7.5	8.0	6.0	7.0	0
Lower New Fork 1	0.7	10.0	10.0	4.0	4.0	5.0	5.0	7.0	7.0	9
Lower New Fork 1A	10.0	10.0	9.2	6.0	4.0	8.0	5.0	6.0	7.0	1
Willow										0
Lizzie L										0
Dumphy										0
Lower W										1
Willow Lake - Lower Inlet	10.0	10.0	0.7	8.0	8.0	7.0	3.0	3.0	8.0	8

- New Fork Lake Sites Rated Highest
- Minimal to no Wetland Impacts for the New Fork Lake Lower Inlet Alternative

Phase I Summary - Dam Structure Evaluation

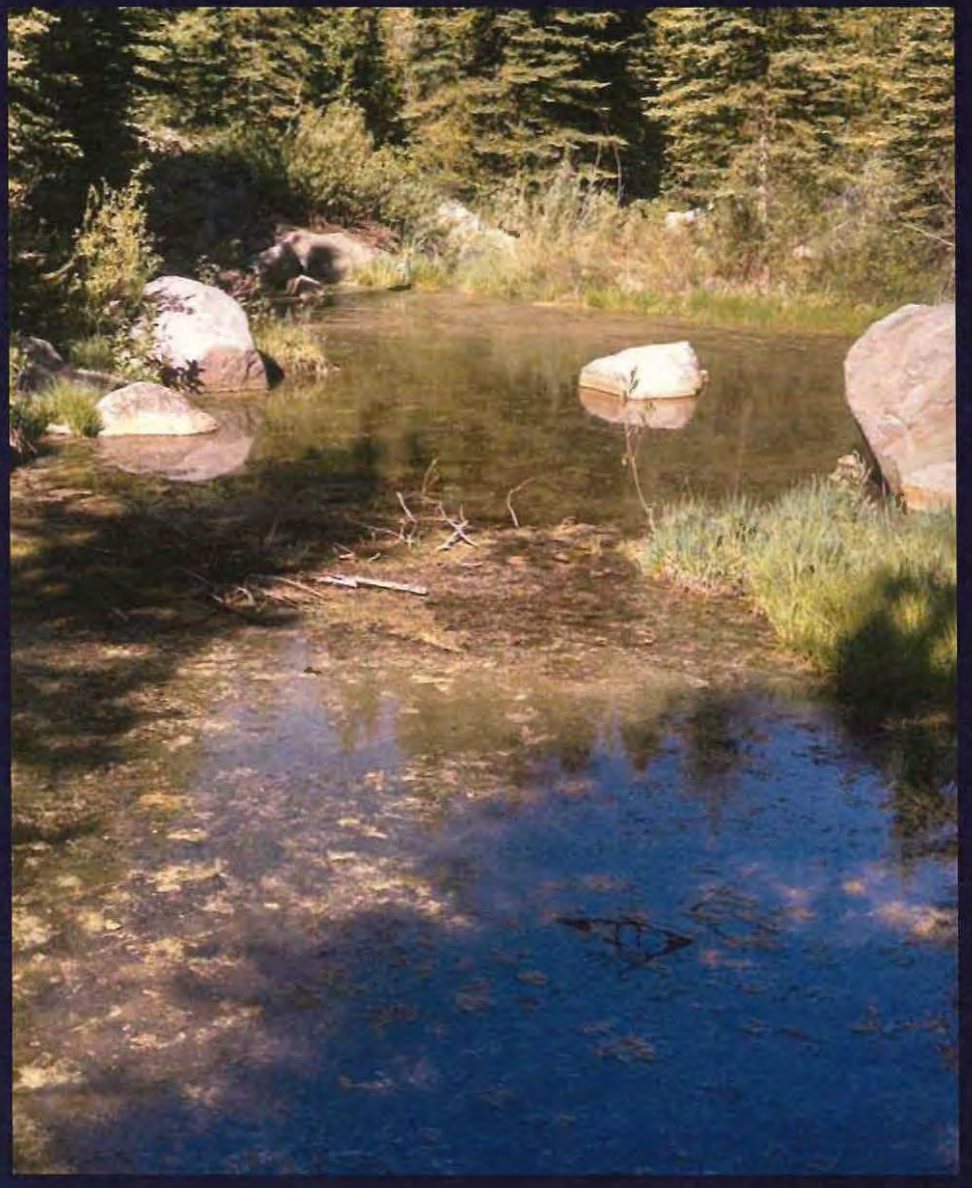

Phase I Summary - Access Road and Bridge

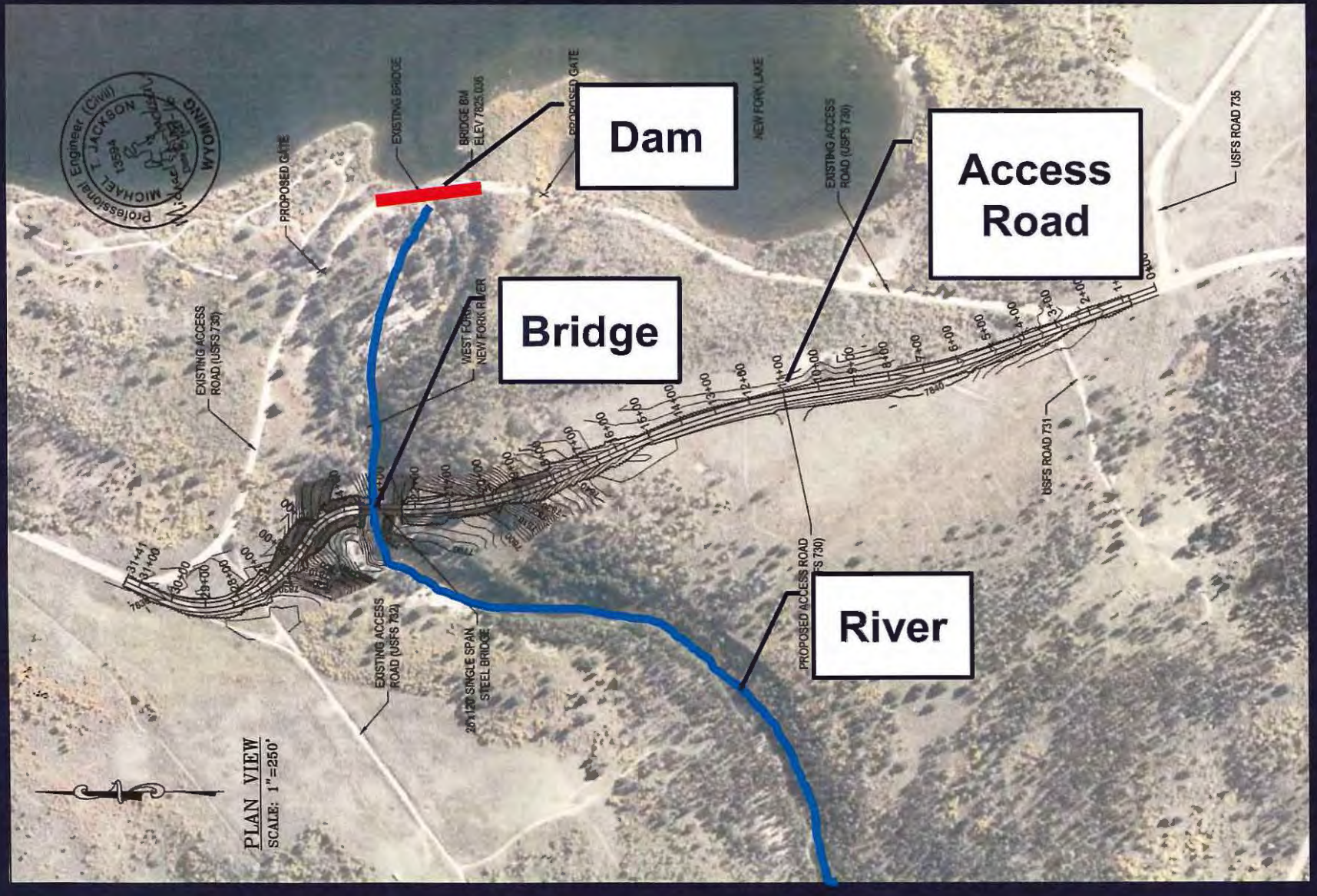

Phase I Summary – Alternatives Conceptual Design

- Alternative 1 – Lower Inlet
- Alternative 2 – Raise Dam
- Alternative 3 – Lower Inlet & Raise Dam

Alternative 1 – Lower Inlet

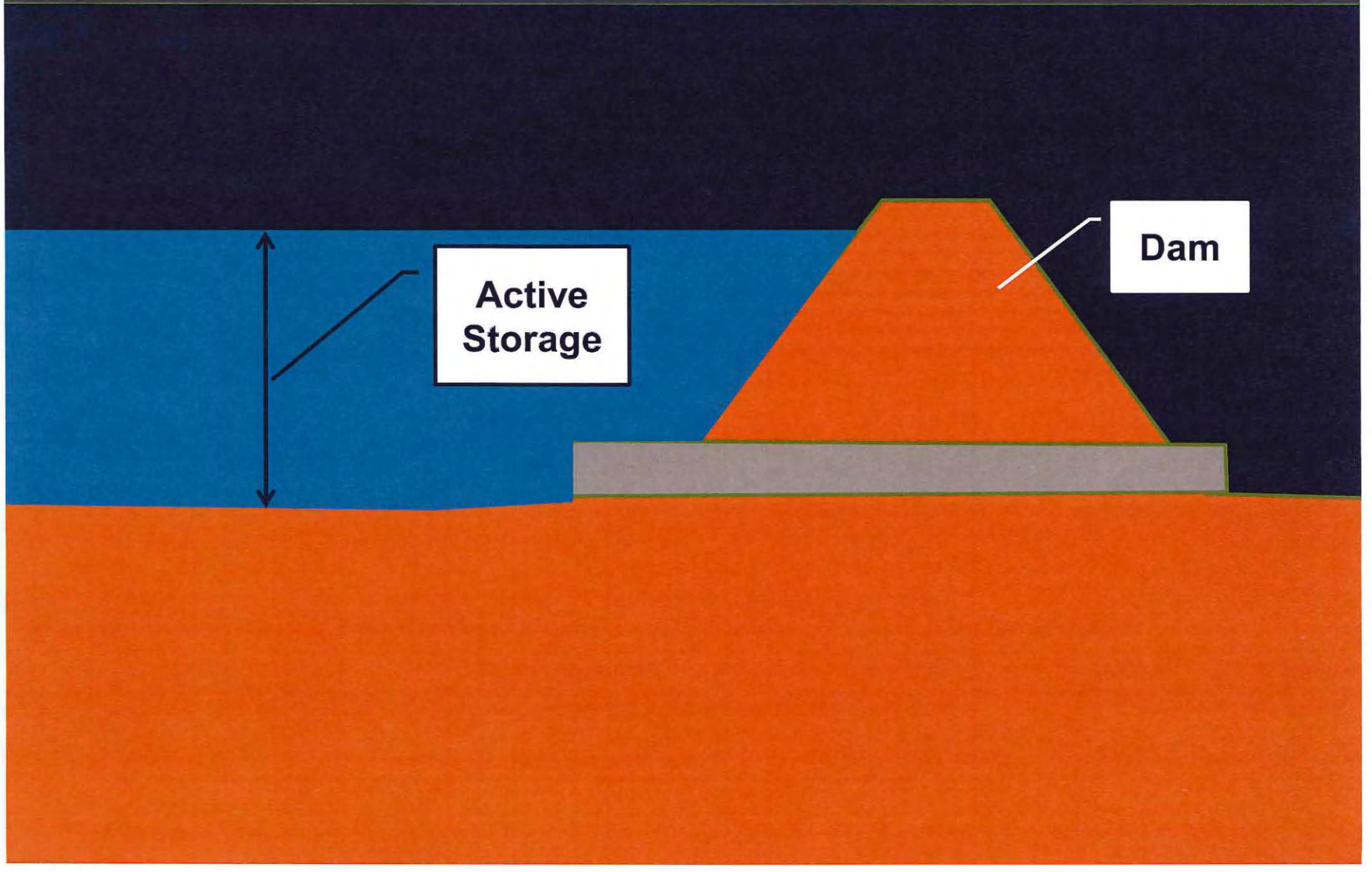

Alternative 1 – Lower Inlet

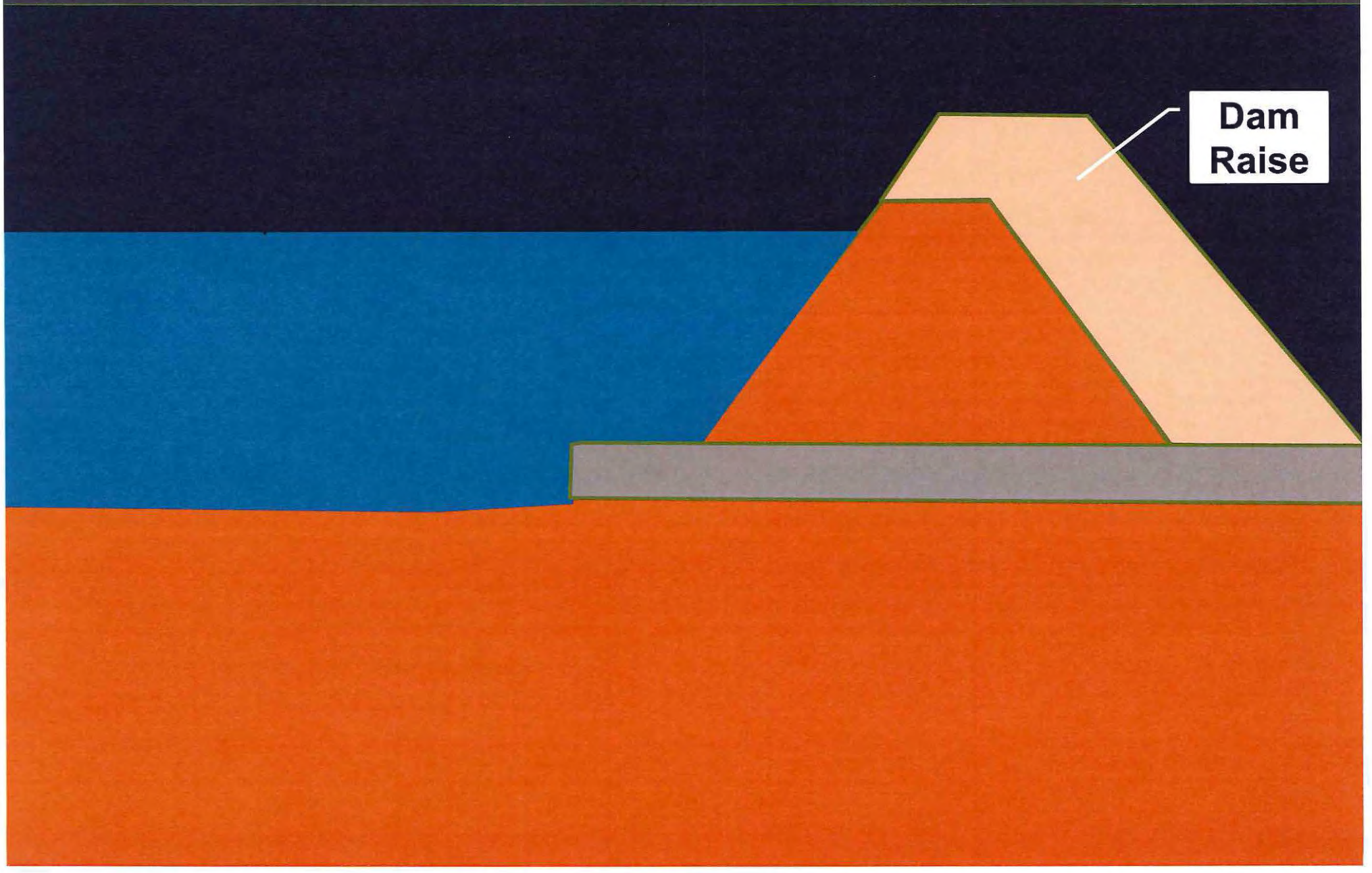

Alternative 1 – Lower Inlet

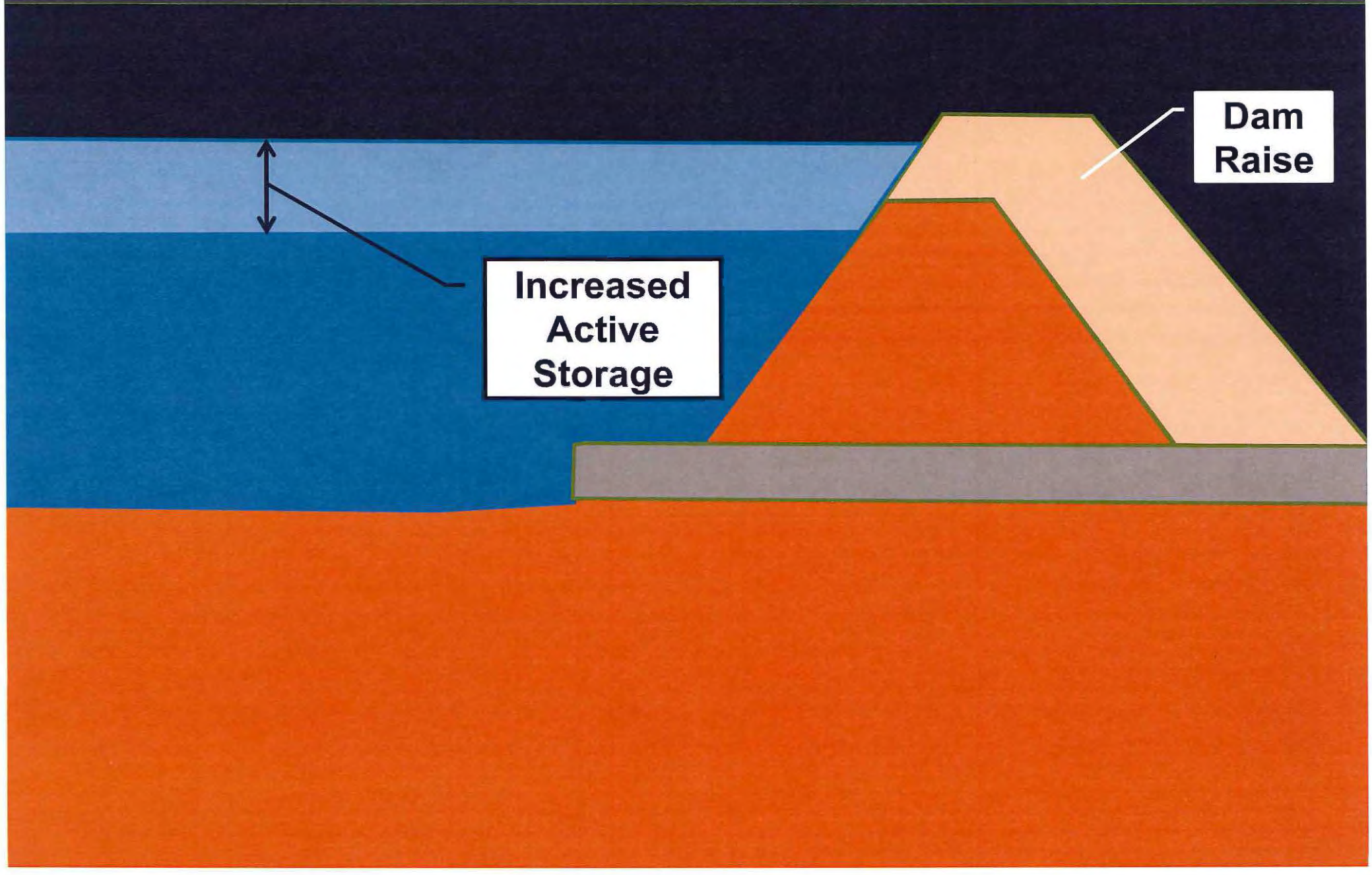

Alternative 1 – Lower Inlet

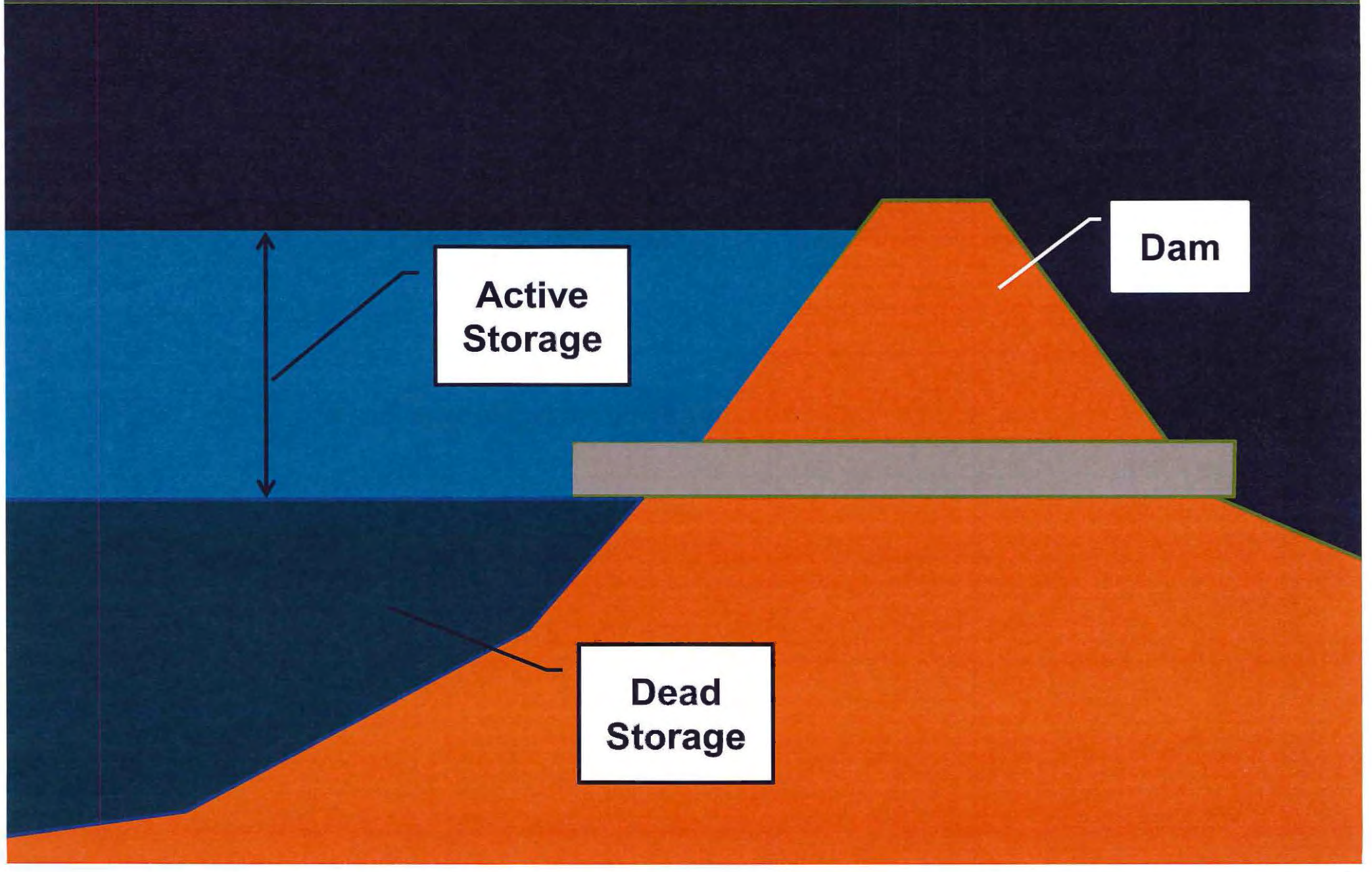

Alternative 1 – Lower Inlet

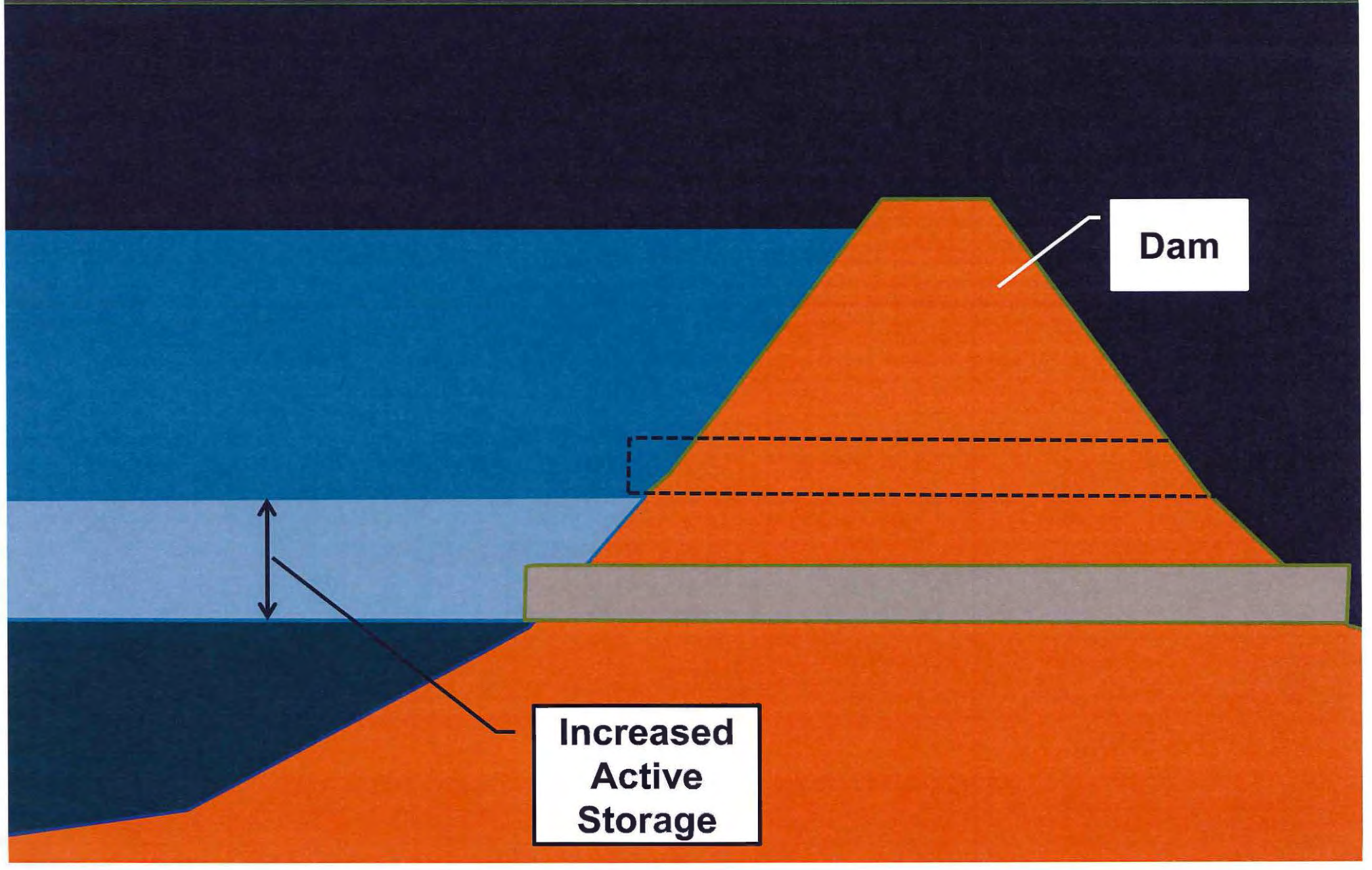

Alternative 1 – Lower Inlet

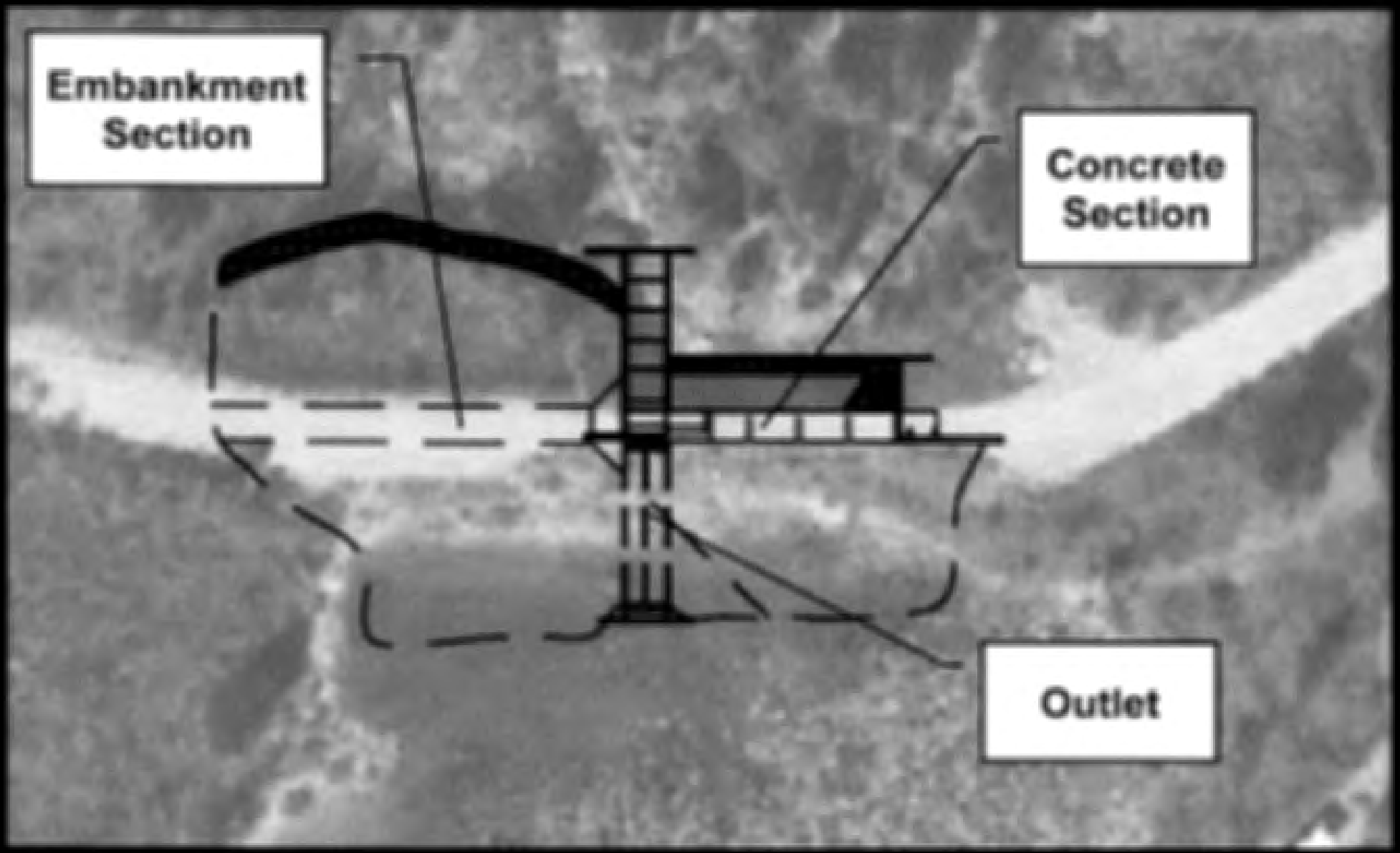

Alternative 1 – Lower Inlet

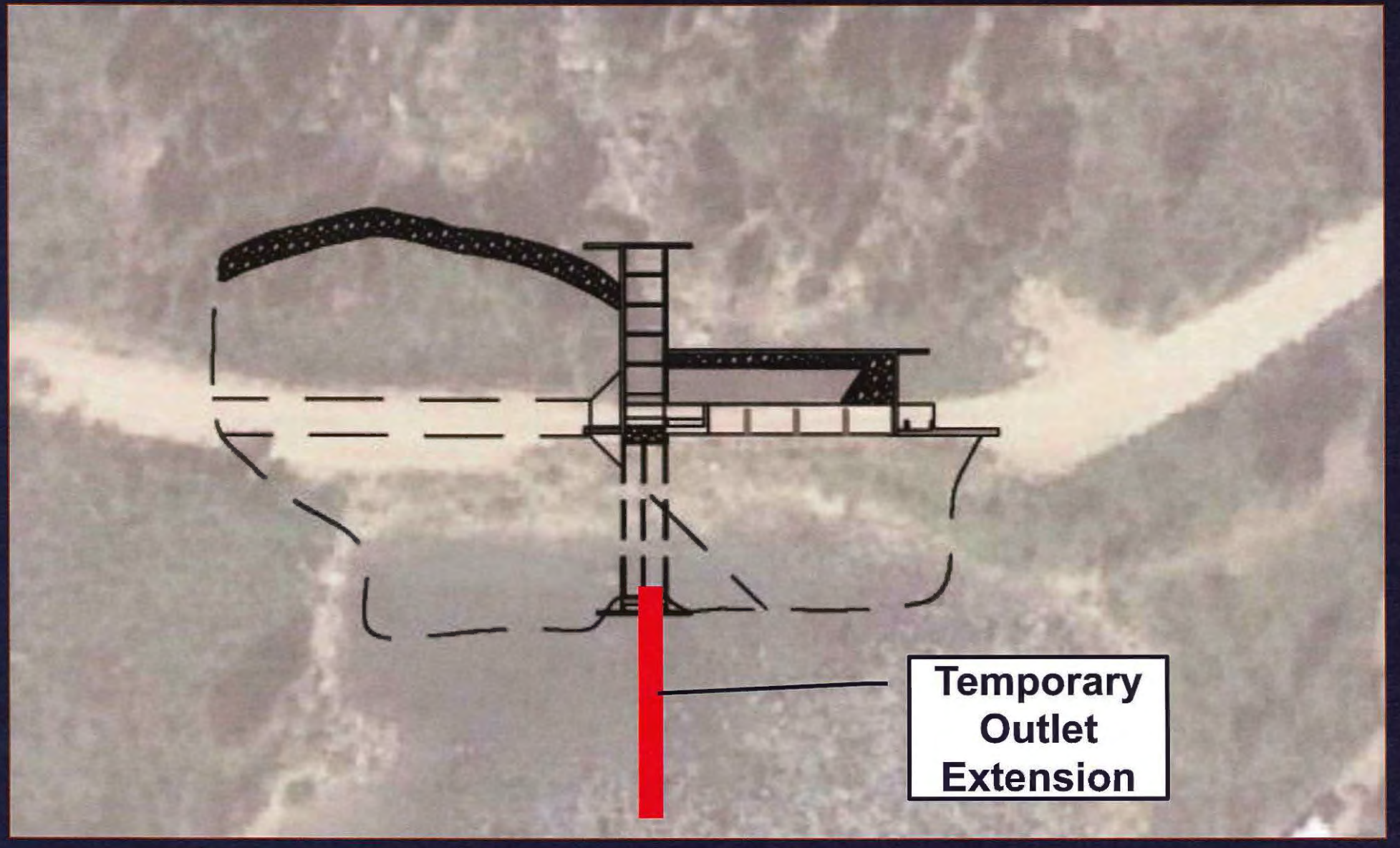

Alternative 1 – Lower Inlet

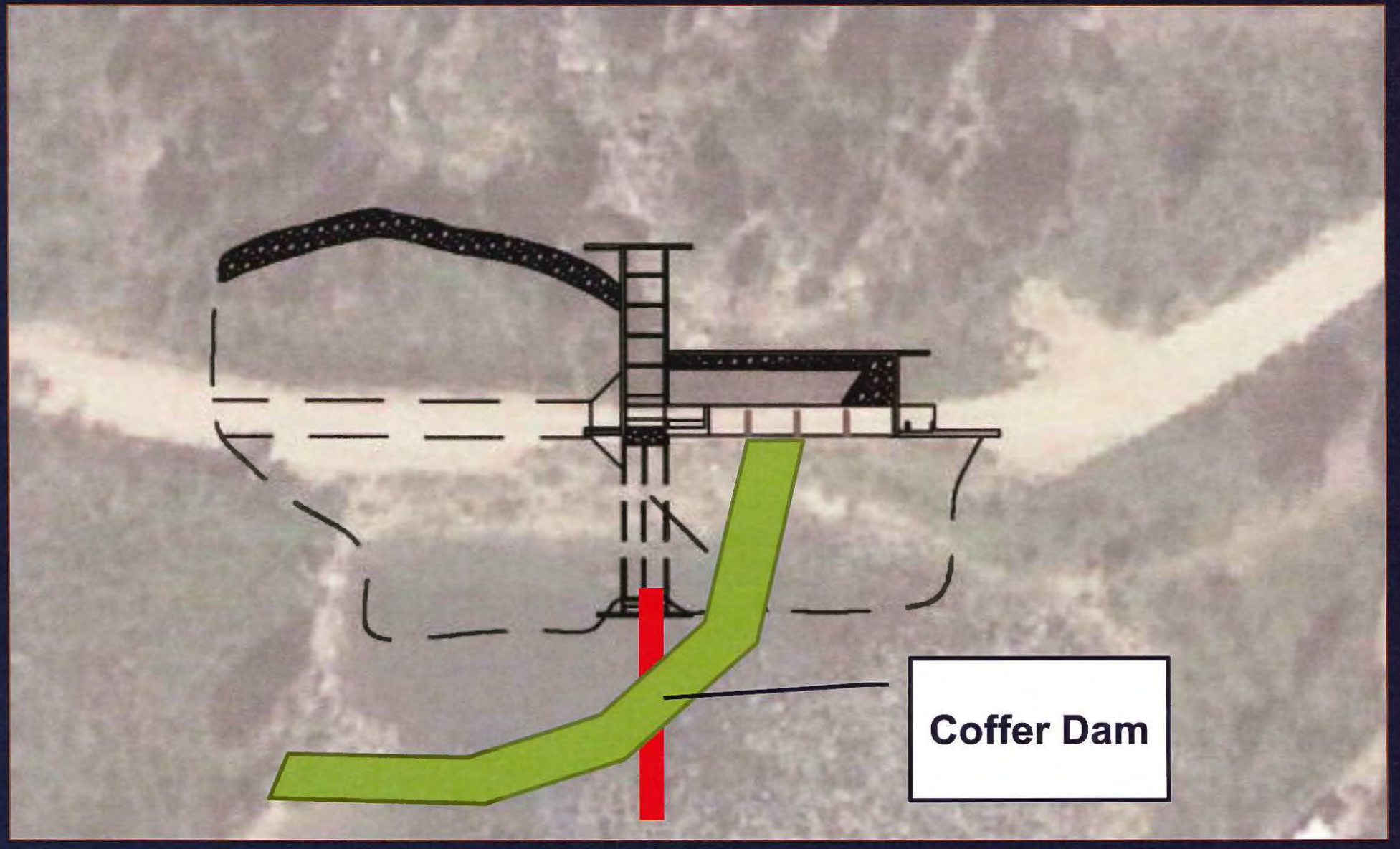

Alternative 1 – Lower Inlet

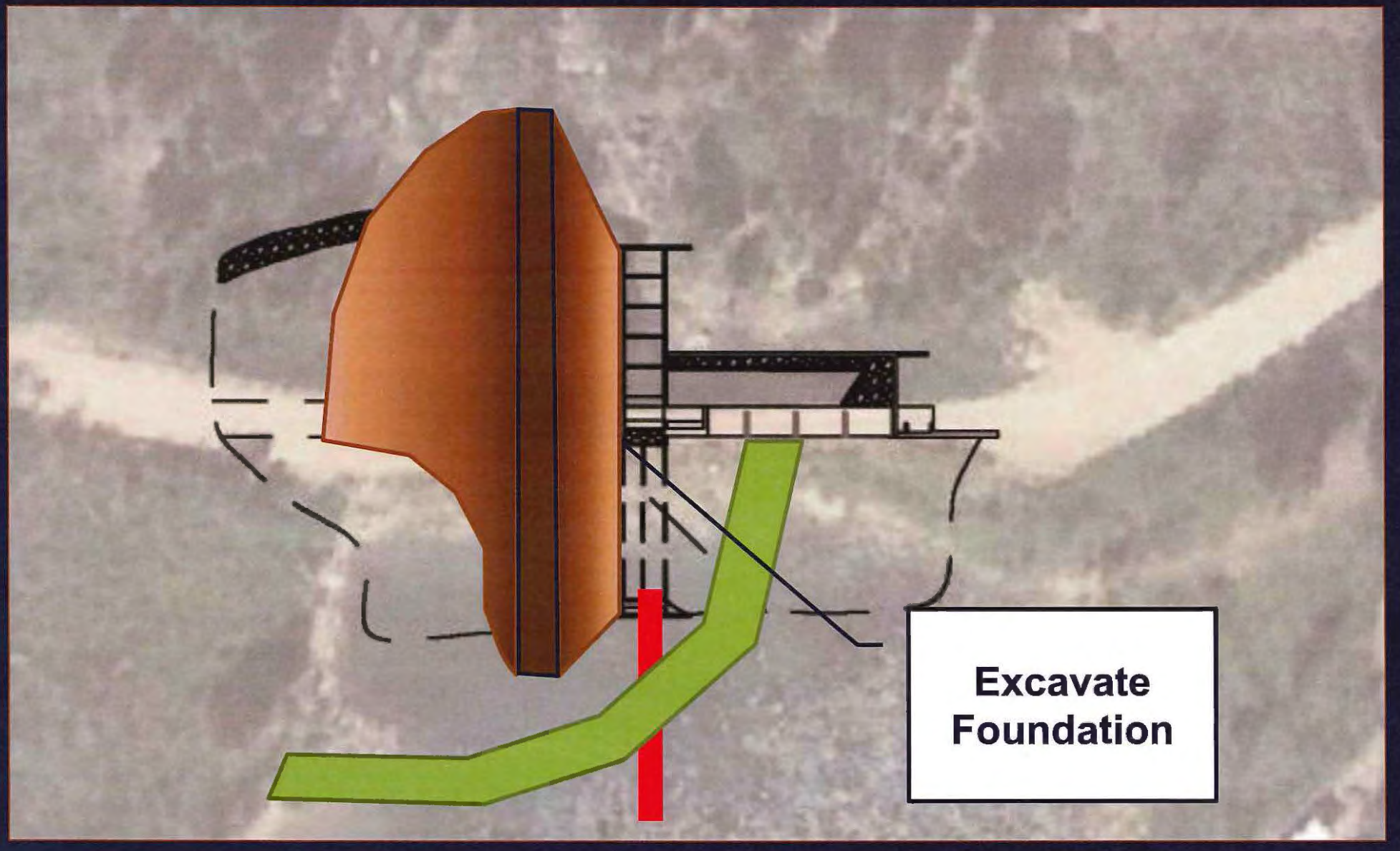

Alternative 1 – Lower Inlet

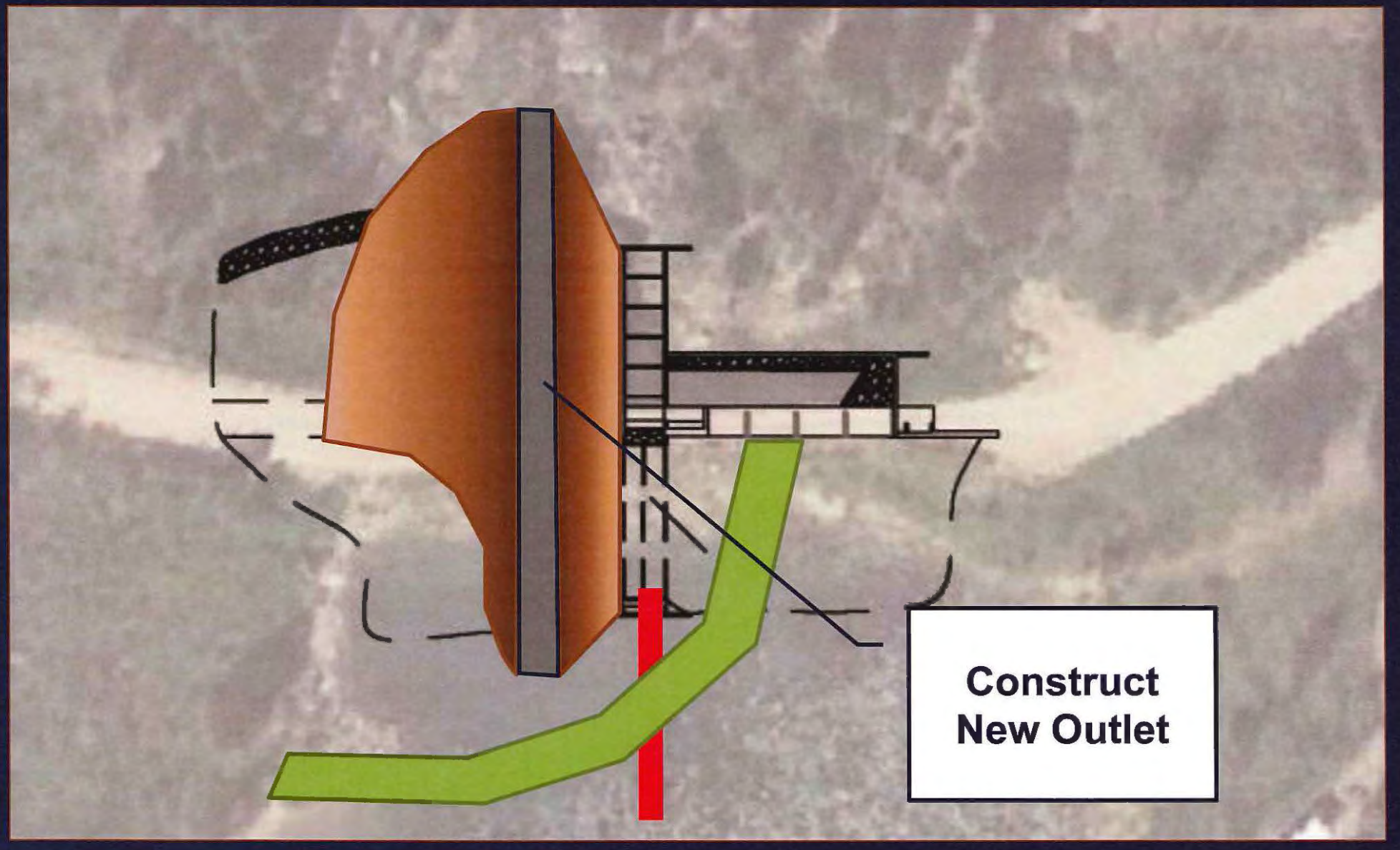

Alternative 1 – Lower Inlet

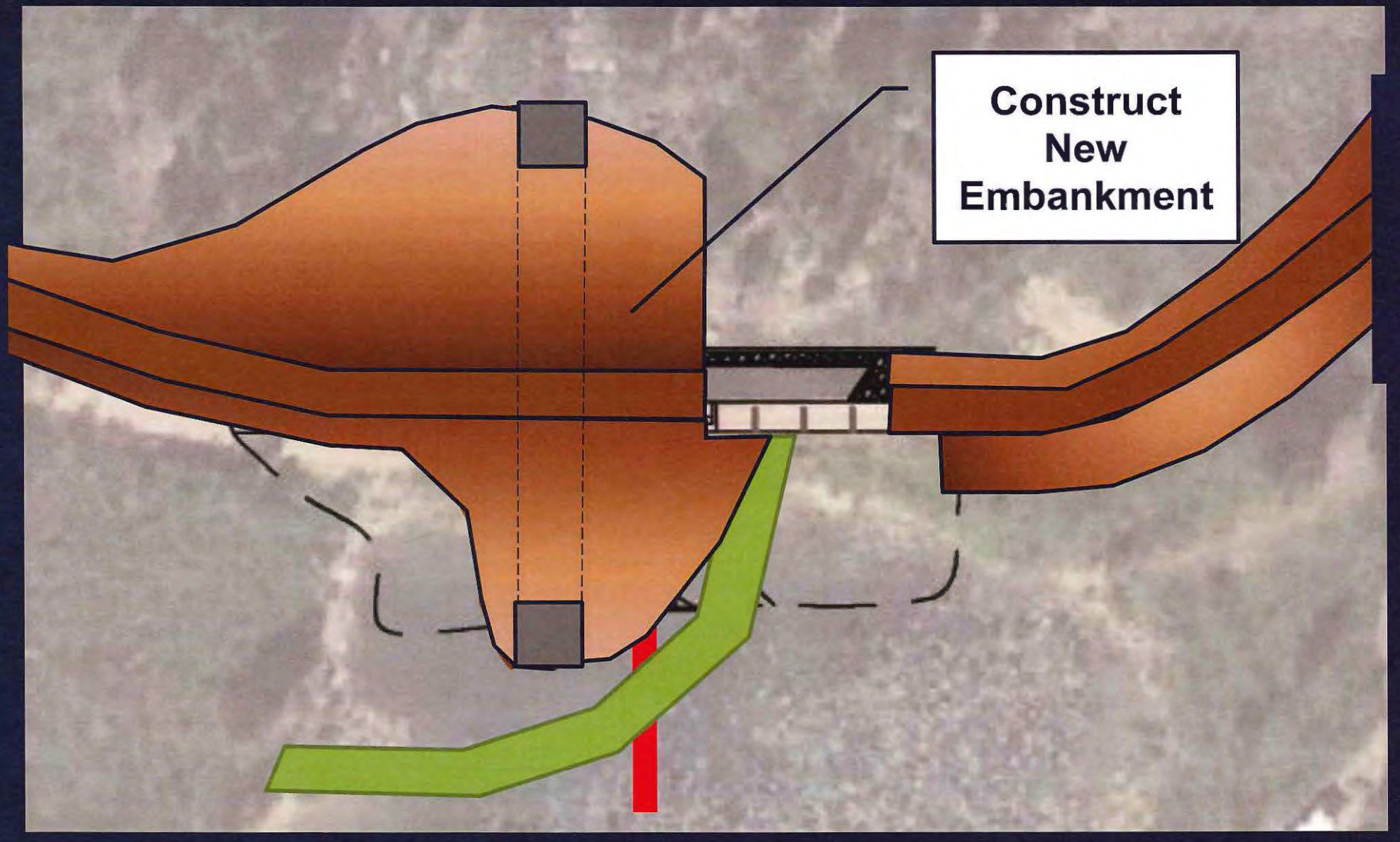

Alternative 1 – Lower Inlet

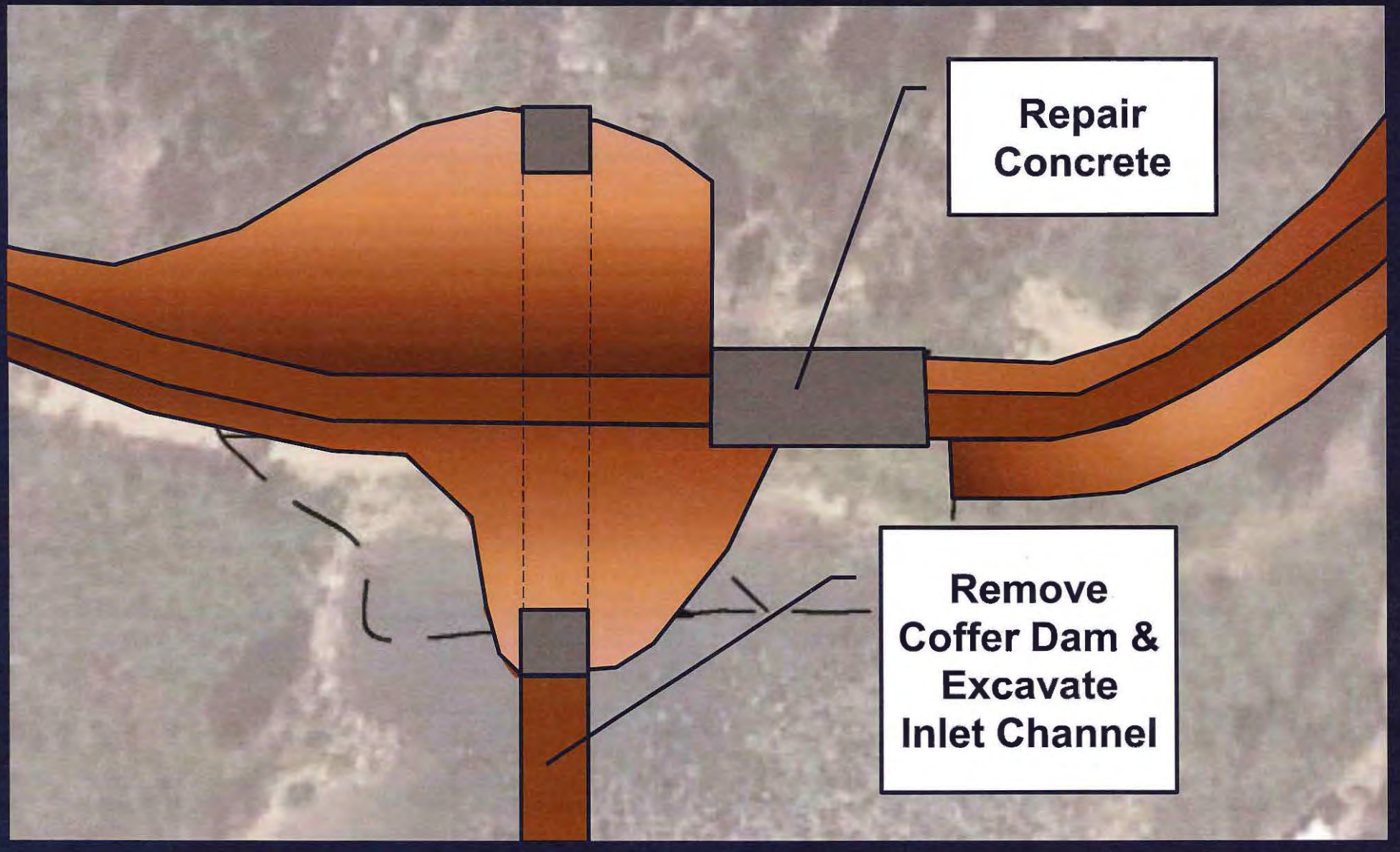

Alternative 1 – Lower Inlet

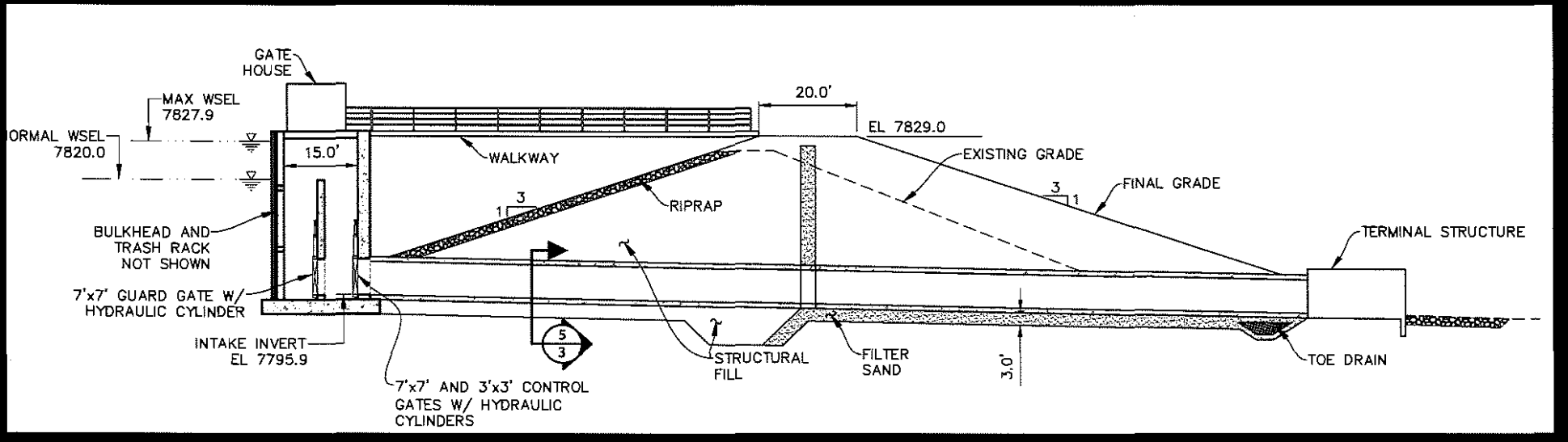

Alternative 1 – Lower Inlet

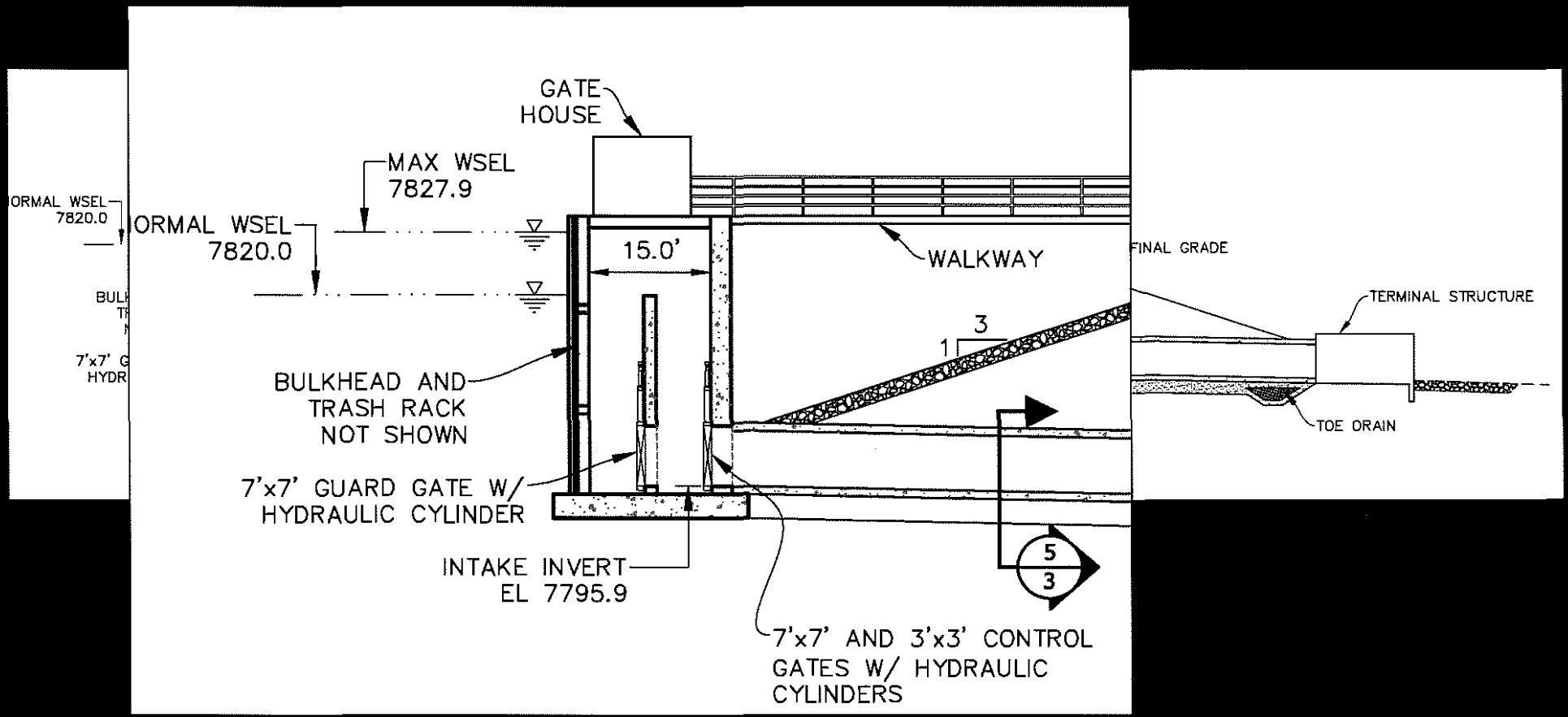

Alternative 1 – Lower Inlet

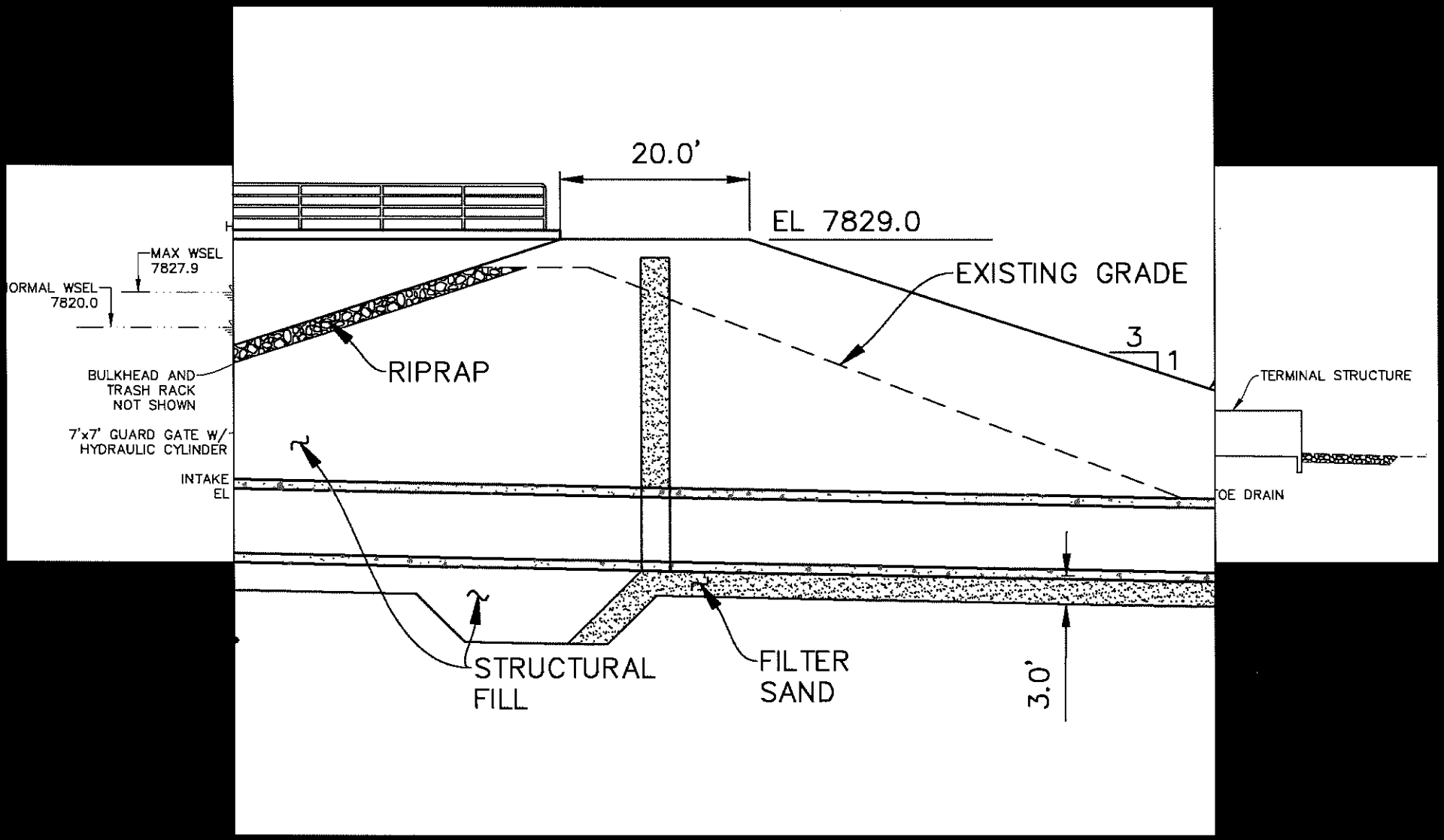

Opinion of Probable Construction Cost

Alternative	OPCC
1 – Lower Inlet	$12.7 Million
2- Raise Dam	$25.4 Million
3 – Raise Dam and Lower Inlet	$14.1 Million

Phase I Summary - Economic Evaluation

- Evaluated Monetary Benefit of Additional Irrigation Water
- Identified Benefit Cost Ratio (BCR)

Alternative	BCR with Construction	BCR without Construction
1 – Lower Inlet	2.7 : 1	1.2 : 1
1 – Raise Dam	2.1 : 1	0.6 : 1
3 – Lower Inlet and Raise Dam	2.6 : 1	1.1 : 1

- Evaluated Ability to Pay Based on 67, 75 and 90 percent WWDC Grants
- Total Assessment per Acre for a Project Ranged between $4.73 and $27.39 (Includes Existing Assessment)

Phase I – Conclusions

- Annual average shortage of 6,700 acre-feet or 8 percent.
- Annual available flows at New Fork Lake 11,200 acre-feet.
- A 9,400 acre-foot enlargement will provide an 8 out of 10-year yield of approximately 3,000 acre-feet at the dam. – 2,400 ac-ft at point of use
- Alternative 1 (Lower Inlet at New Fork Lake) is the least environmentally damaging of the three alternatives at New Fork Lake and second least of all 12 alternatives
  - Close second – Least damaging site requires pumping and does not meet the need. Environmental impacts from pumping were not evaluated
- New Fork Dam alternatives were the highest rated overall
- Site geology does not present any fatal flaws
- The existing dam would likely be overtopped in the PMF
- The existing dam is in satisfactory condition

Phase I Conclusions - Continued

- Hydropower is not likely economically viable
- The road should be relocated to address safety, flooding, and security concerns
- The alternatives at New Fork Lake appear to be technically feasible and permittable.
- Alternative 1 (Lower Inlet) has the lowest total cost and highest BCR
- Assessments on irrigators to pay for the project range from $4.73 per ac-ft to $27.39 per ac-ft

Draft Report Comments

- 22 Comments
- 17 - Wyoming Game and Fish
  - Weak Purpose & Need
  - Opportunity Costs vs Other Uses
  - Including Construction Benefits in BCR
  - Hay Production
  - Potential for Quantifying Fisheries Benefits
  - Ability to Pay
  - Questions about Combining Irrigation and Conveyance Efficiency
- 4 – Bridger Teton National Forest Comments
  - Review Schedule
  - Level of Environmental Analysis
  - New Special Use Permit
- 1 – Wyoming Water Development Commission
  - Nationwide Permit

Progress Since Draft Report

- New Fork Irrigation District
  - Provided WWDC with resolution letter and application to continue the project
- WWDC
  - Advanced the Study to Level II Phase II

Phase II Activities

- Bathymetric and Topographic Surveys
- PMP and Hydrologic Analysis
- Environmental Assessment & Permitting:
  - Meetings with WGFD & USACE
  - Wetland Mapping
  - Wetland Functional Assessment
  - Fisheries Assessment
  - Cultural and Paleontological Survey
  - Update Purpose and Need
- Geotechnical Investigations
- Advance Conceptual Design & Cost Estimates
- Advance Economic Analysis
- Create a GIS
- Prepare and Present Reports

Thank You - Discussion

New Fork River Watershed
Level I Study – Informational Meeting

June 12, 2017

RJH CONSULTANTS, INC.

RIO VERDE ENGINEERING
CONSULTING ENGINEERS AND LAND SURVEYORS

TETRA TECH

Meeting Purpose

- Status update
- Update on draft reservoir screening study
- Solicit public input

Project Location/ Study Area

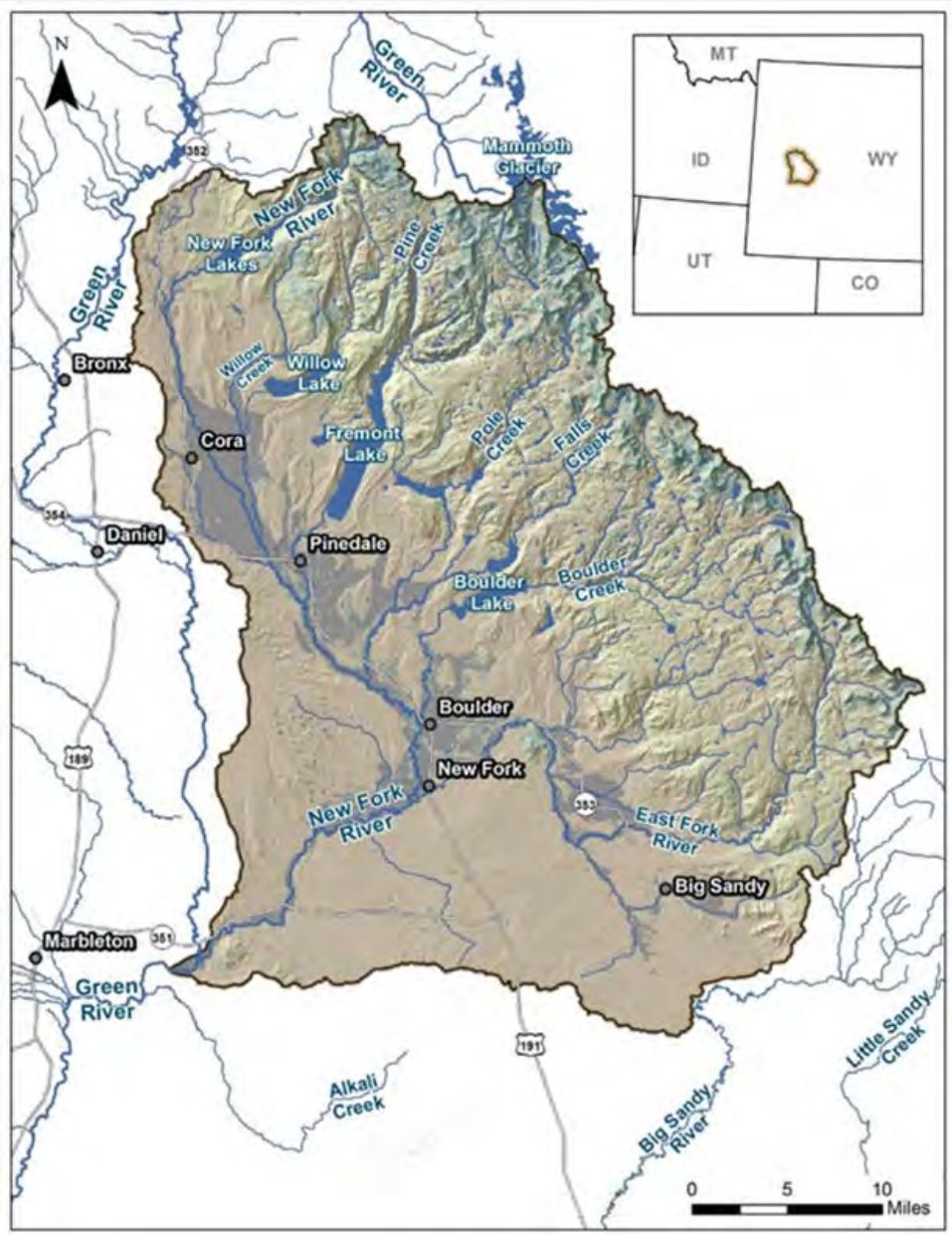

Reservoir Storage Evaluation

- Larger storage sites
  - Selected min 5,000 ac-ft
- Review previous reports
  - 31 storage sites previously investigated in the basin
- Identify new potential sites
  - 9 new sites
  - Focused on southern portion of the basin
    - Greater shortages, less existing storage
- Screen based on 15 categories

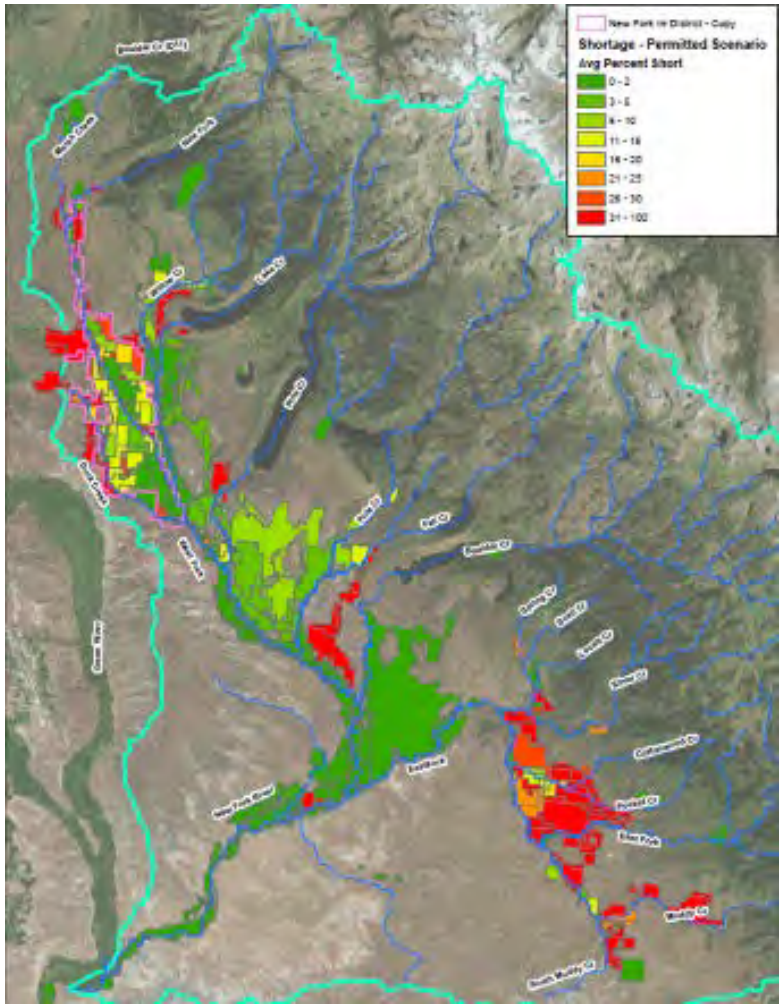

ds\GIS\Figures\Figure 1_Potential Sites - NAD 83 UTM 12.mxd

Screening Categories

- Located on Wilderness
- Storage
  - Target minimum storage volume 5,000 ac-ft
- Water delivery
  - On channel or canal required
- Water supply conveyance
  - On channel or canal required
- Geology
  - Favorable condition
  - Slope stability
  - Seepage

Screening Categories

- Downstream risk
  - New
  - Improve existing
- Recreation
  - Flat water fishery
  - Potential late season stream flow
- Landownership
  - Willing owner

Screening Categories

- Cultural Resources
  - National Register of Historic Places (NRHP)
  - Eligible for Listing
  - Eligibility Unknown
  - Not eligible
- Big Game
  - Crucial Winter Range
  - Crucial Winter/Yearlong Range
  - Mule Deer Migration

Screening Categories

- Fisheries
  - Stream habitat loss
  - Existing recreational fishery
  - Presence of rare species
  - Impediment to spawning/rearing

Screening Categories

- Sage Grouse
  - Core habitat
- Sensitive Species
  - Federally listed Endangered or Threatened species
  - BLM, USFS, or Wyoming Sensitive Species

Screening Categories

- Wetlands
  - Magnitude of physical impact (acres inundated)

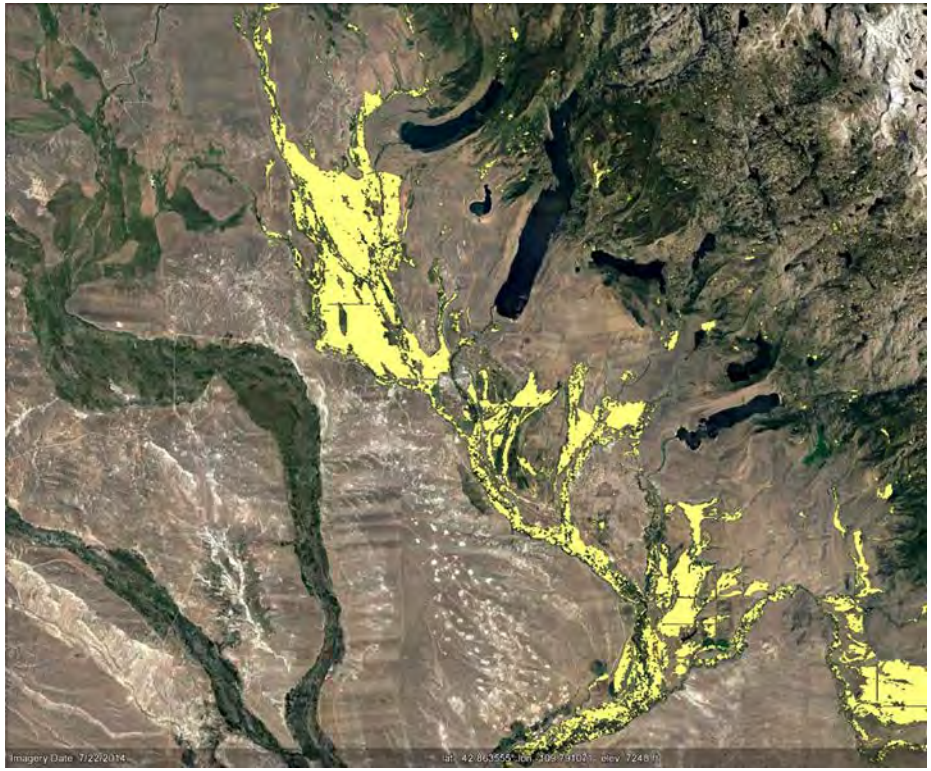

Screening Categories

- Ability to permit
  - Combination of environmental categories

Rankings

- Score
  - 1-10
  - Multiplied by weighting factor
  - Higher score = preferred sites
  - Sites on wilderness will not be further pursued
  - Sites with likely fatal flaws will not be further pursued

Rankings

- New Fork Lake – highest ranked options
  - All three options in the top 10
  - Will not evaluate further in Level I because of ongoing Level II
- 5 sites on wilderness eliminated
- 4 sites eliminated due to fatal flaw (fisheries or landownership)
- 2 sites eliminated due to difficult access –
  - Significant road building required – impacts not initially considered
- Site 9
  - Located outside of basin
  - Trans-basin diversion into New Fork River

Rank of Considered Sites	Alternative	Wilderness Area	Total Points	Rank	Percent of Highest Ranked Alternative
1	New Fork Lake - Lower Inlet	NO	1775	1	100%
2	New Fork Lake - Raise Dam and Lower Inlet	NO	1765	2	99%
N/A	East Fork No.1	YES	1675	3	94%
3	Site 9	NO	1667	4	94%
4	Feltner	NO	1585	5	89%
N/A	Half Moon Lake Enl	N/A	1551	6	87%
N/A	Willow Lake - Lower Inlet and New Fork - Lower Inlet	N/A	1505	7	85%
N/A	Marm's Lake	YES	1501	8	85%
5	Silver Creek	NO	1495	9	84%
6	Silver/Spring Creeks	NO	1493	10	84%
N/A	Pyramid	YES	1492	11	84%
7	Silver Creek - East Fork (2 Sites)	NO	1485	12	84%
8	New Fork Lake - Raise Dam	NO	1475	13	83%
N/A	Burnt Lake	N/A	1469	14	83%
9	Site 2	NO	1410	15	79%
10	Fremont Lake Enl	NO	1387	16	78%
11	Site 8	NO	1375	17	77%
12	East Fork Gorge	NO	1368	18	77%
N/A	Divide	YES	1366	19	77%
N/A	Willow Lake - Lower Inlet	N/A	1350	20	76%
13	New Fork Off Channel	NO	1339	21	75%
14	Site 7	NO	1295	22	73%
15	Church	NO	1285	23	72%
16	Boulter Lake Enl.	NO	1280	24	72%
17	Lower New Fork 1	NO	1237	25	70%
N/A	Silver Lake	YES	1235	26	70%
18	Site 3	NO	1176	27	66%
19	Site 5	NO	1174	28	66%
20	Lower New Fork 1A	NO	1173	29	66%
21	Dumphy Hollow	NO	1170	30	66%
22	Lizzie Lozier	NO	1160	31	65%
23	Lower Willow Creek (2007)	NO	1135	32	64%
23	Lower Willow Creek (2016)	NO	1135	32	64%
25	Site 4	NO	1104	34	62%
26	Willow Creek	NO	1091	35	61%
27	East Fork	NO	1082	36	61%
28	Site 6	NO	1039	37	59%
29	Boulder Lake Enl.	NO	999	38	56%
30	Site 1	NO	928	39	52%
31	New Fork Narrow	NO	680	40	38%

Top 10 Sites

Rank	Site Name
1	New Fork Lake - Lower Inlet
2	New Fork Lake - Raise Dam/Lower Inlet
3	Site 9
4	Silver Creek
5	Silver/Spring Creeks
6	Silver Creek - East Fork (2 Sites)
7	New Fork Lake - Raise Dam
8	Site 2
9	Fremont Lake Enlargement
10	East Fork Gorge

Top 10 Sites

Rank	Site Name
1	New Fork Lake - Lower Inlet
2	New Fork Lake - Raise Dam/Lower Inlet
3	Site 9
4	Silver Creek
5	Silver/Spring Creeks
6	Silver Creek - East Fork (2 Sites)
7	New Fork Lake - Raise Dam
8	Site 2
9	Fremont Lake Enlargement
10	East Fork Gorge

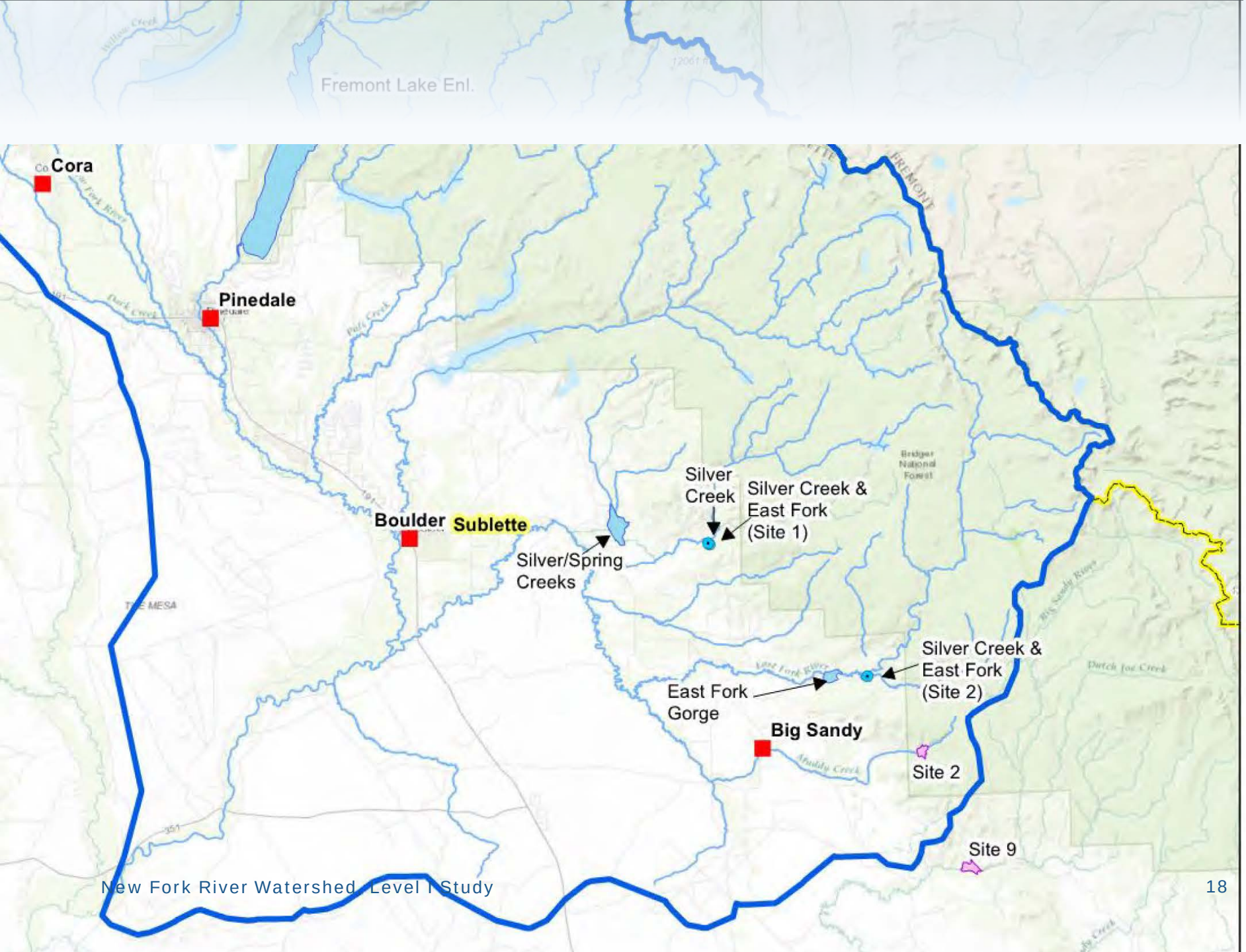
Fremont Lake Enl.
Cora
Pinedale
Boulder
Sublette
Silver Creek
Silver Creek & East Fork (Site 1)
Silver/Spring Creeks
Silver Creek & East Fork (Site 2)
East Fork Gorge
Big Sandy
Site 2
Site 9

Path Forward

- Visit seven sites
- Confirm rankings
- Summary memorandum
  - Guidance document moving forward

Schedule

- July 2016 through November 1, 2017
- Draft report by September 1, 2017
- Final report by November 30, 2017

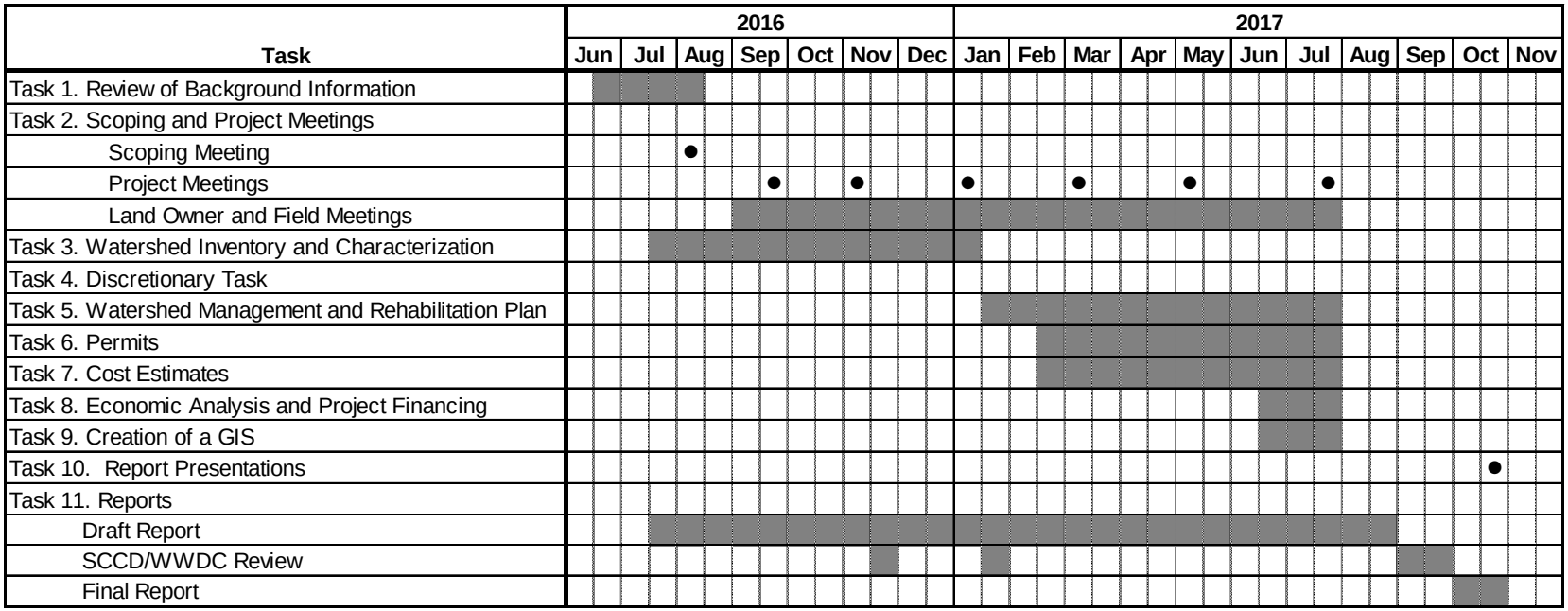

Questions

- Website http://www.sublettecd.com/
- Facebook https://www.facebook.com/SubletteCD/

For additional information please contact:

Ron Steg, Tetra Tech: 307-883-9203 ron.steg@tetratech.com

Mike Jackson, Rio Verde: (307) 367-2826 mjackson@rioverdeengineering.com

Andrew Linch, WWDO (307) 777-7626 andrew.linch@wyo.gov

Mike Henn, SCCD: (307) 367-2257 mhenn@sublettecd.com

Appendix S.
Silver Lake Reconnaissance

This page is left intentionally blank.

MEMORANDUM

Project 16123

TO: Ron Steg – Tetra Tech, Inch

FROM: Edwin Friend, P.E., P.G., PMP – RJH Consultants, Inc.

Michael Jackson, P.E. – Rio Verde Engineering MJ

DATE: January 24, 2018

RE: New Fork River Watershed Level I Study
Silver Lake Dam Reconnaissance

Introduction

The purpose of this memorandum is to present the review of existing data, evaluations, site visit, and rehabilitation concepts to address dam safety concerns at Silver Lake Dam (Project). The dam, reservoir, and site vicinity are shown on Figure 1. The dam is operated by the Silver Lake Irrigation District (Owner). The work described in this memorandum was performed as part of the existing New Fork River Watershed Level I Study.

Background

Silver Lake Dam was originally constructed in about 1928 and consisted of a 12-foot-tall, timber crib dam backfilled with rock fill and included a wooden spillway. The dam was constructed by the Silver Lake Reservoir Company and permitted by the Wyoming State Engineer's Office (WYSEO) under Permit No. 3970. The original reservoir storage was about 1,219 acre-feet (ac-ft).

In 1947, the original dam was identified as unsafe due to extensive under seepage. The dam was reconstructed in 1953 by the Soil Conservation Service (now the Natural Resource Conservation Service (NCRS)) in accordance with WYSEO Permit No. 5769. The dam was raised to a total height of 23.85 feet with a reservoir pool depth of 18.42 feet. The reservoir storage was increased to about 2,151.63 ac-ft. The outlet works consists of a 30-inch diameter corrugated metal pipe (CMP). The spillway is located in a swale about 2,000 feet southeast of the dam and consists of a rock cut channel that is about 35 feet wide. The original drawings and specifications are provided in Attachment E.

The original reservoir and subsequent enlargement were permitted and constructed prior to the 1964 Wilderness Act, which established a National Wilderness Preservation System. The existing structure has not been altered since its construction in 1955.

During an inspection by the United States Forest Service (USFS) in August 1975, deficiencies in the concrete in the outlet works were identified and repairs were to occur "within a couple of years." In 1982, the District Ranger recommended approval of use of mechanized equipment to perform repairs to the dam; however, the Forest Supervisor rejected the use of mechanized equipment and therefore, the repairs did not occur. Supporting documents are provided in Attachment A. Additional previous dam safety

inspection reports are provided in Attachment F and special use permits are provided in Attachment G.

Based on previous dam safety inspections, there has historically been significant vegetation on the downstream slope of the dam, and seepage and sink holes on the dam near the right abutment. Rodent burrows have also been documented on the downstream slope of the embankment.

In 2014, the Owner identified that a portion of the outlet works intake structure failed and damaged the gate and CMP. The gate has remained in the open position since 2014.

Hydraulic and Hydrologic Evaluations

RJH Consultants, Inc. (RJH) performed simplified analyses for a simulated sunny-day dam breach to identify a preliminary hazard classification for Silver Lake Dam. The simplified analyses consisted of estimating dam breach parameters using industry-accepted empirical equations and developing a dam breach hydrograph using the U.S. Army Corps of Engineers (USACE) HEC-HMS hydrologic modeling software. RJH then routed the dam breach hydrograph through the downstream channel using the USACE HEC-RAS hydraulic modeling software. The HEC-RAS model consisted of a two-dimensional hydraulic model to account for the effects of attenuation and dispersion of the breach hydrograph. The topographic terrain for the model was developed using U.S. Geologic Survey (USGS) 10-meter digital elevation mapping (DEM) data. Based on the results of the model, a habited structure located approximately 15 miles downstream of the dam would be flooded up to a depth of 4.6 feet at a velocity of 7.5 feet per second (fps). This yields a depth-velocity product of about 35. Loss of life is generally considered possible when the velocity-depth product is above 7 (ACER Technical Memorandum No. 11). Also, Wyoming State Highway 353 would be overtopped at a depth of 4.8 feet at a velocity of 3.4 fps (i.e., depth-velocity product of 16). For these reasons, it is RJH's opinion that Silver Lake Dam is a high hazard facility. A high hazard rating means that loss of life is likely in the event of a dam breach. Routing of the inflow design flood (IDF) is shown on Figures 2 through 4.

RJH performed simplified hydraulic analyses to identify the hydraulic capacity of the existing 30-inch diameter CMP outlet works. Based on our analyses, the existing outlet works has a hydraulic capacity of 68 cubic feet per second (cfs) when the reservoir is at the spillway invert. The WYSEO Rules do not require a minimum hydraulic capacity for the outlet works. However, the U.S. Bureau of Reclamation's (USBR), *ACER Technical Memorandum No. 3* (USBR, 1982) (i.e., industry accepted guidance document) recommends that outlet works be sized to draw down the reservoir to a level to commensurate with 10 percent of the maximum storage capacity within a 1- to 4-month period. Based on our analyses, the existing outlet works can drain the reservoir to the 10-percent storage level in 16 days. If the existing pipe was slip-lined and the interior diameter was decreased to 24 inches, the outlet works would have a peak capacity of 40 cfs and could drain the reservoir to the 10-percent storage level in 27 days. In RJH's opinion, it would be feasible to slip-line the existing outlet works pipe and maintain sufficient hydraulic capacity.

RJH performed simplified hydrologic and hydraulic analyses to identify the IDF and evaluate the spillway size required to convey the IDF. We assumed the IDF would be equivalent to the probable maximum flood (PMF) for a high hazard dam. Probable maximum precipitation (PMP) depths were obtained using the WYSEO's PMP Evaluation GIS Tool. Other hydrologic parameters (i.e., precipitation losses, lag times, etc.) were estimated based on our experience with similar projects. The USACE HEC-HMS model was used to develop the IDF hydrograph and perform reservoir and spillway routing. Based on the results of the

model, the IDF would have a peak inflow of about 30,000 cfs and a volume of 3,400 ac-ft. The existing spillway cannot convey the IDF and therefore, the embankment would be overtopped by about 5.3 feet. Increasing the embankment height by 6.8 feet would provide sufficient freeboard to convey the IDF through the existing spillway and include 1.5 foot of residual freeboard as required by the WYSEO. A spillway about 1,000 feet in width would be required to prevent overtopping of the existing embankment. Widening the spillway would require an extensive blasting program with significant disturbance.

USFS Meeting

A meeting was held with the USFS on September 18, 2017 to discuss the dam safety issues at Silver Lake Dam and the revised hazard classification. The existing dam deficiencies and rehabilitation concepts were also discussed. Rehabilitation concepts would require performing a Minimum Requirements Decision Guide (MRDG), which will help identify the minimum tool required to perform work in the wilderness. The USFS stated that it is possible to use mechanized equipment to repair the dam within the wilderness. The USFS currently anticipates that National Environmental Policy Act (NEPA) permitting could likely be completed within the guidelines of an Environmental Assessment (EA). Meeting minutes are provided in Attachment B. Wilderness policy guidelines are provided in Attachment C.

Site Visit and Dam Safety Observations

A site visit was performed on October 12, 2017 and included personnel from the Owner, Rio Verde Engineering, the Wyoming Water Development Commission, and RJH. Access to the site was provided by either horse back or a combination of utility task vehicle (UTV) and hiking. The UTV was used to travel along Wolf Lake road to the wilderness boundary. The final 4 miles was traveled by foot along the original construction access road. The original access contained several ruts.

The site visit consisted of a visual observation of the embankment, outlet works, and spillway. A camera inspection occurred of the outlet pipe and consisted of GoPro cameras mounted on a wooden boat that was pulled through the outlet pipe. The downstream slope of the embankment was obscured by snow and vegetation; therefore, limited observation occurred on the downstream slope. Below is a summary of the observations with additional details and representative photographs provided in Attachment D. A general plan of the dam and reservoir is shown on Figure 5.

Spillway

The spillway consists of a rock cut spillway that appears to be in good condition. The bottom width is about 35 feet, which is 5 feet less than designed.

Outlet Works Inlet and Outlet Structure

The outlet works inlet structure has failed and does not include a concrete foundation, and the existing walls were placed on fill or native soil materials. The structure has shifted and portion of the concrete has penetrated and partially obstructed the outlet pipe. The gate is inoperable. There is a large depression upslope of the inlet that appeared in 2014, according to the Owner, and appears to be related to surface erosion into the damaged pipe. The slope around the inlet structure is generally steeper than the remainder of the upstream slope of the embankment.

The outlet structure is in good condition.

Outlet Works CMP

Approximately the first 10 feet of the CMP downstream of the inlet structure is severely corroded with dozens of pinhole leaks and several large openings. The remaining CMP appears to be in fair condition with rust on the lower 2/3 of the pipe and the upper 1/3 still includes the original asphalt lining. There is a flatter portion of the pipe about 20 feet downstream of the inlet structure. The flat portion is about 20 to 40 feet long. The pipe was not distressed in this area and the flatter area could be from original construction.

Embankment

Except for the area around the inlet structure, the upstream slope of the embankment was in good condition.

The crest of the embankment contained significant large woody vegetation and was an irregular surface likely due to wildlife.

The downstream slope contained significant large woody vegetation and was mostly obscured by snow. Rodent burrows were observed right of the outlet works. Based on historical observations, significant seepage has occurred.

Potential Borrow Materials

Based on observations of surface materials below the normal high-water line between the dam and spillway, there appears to be material that is sand and gravel with less than 10 percent fines and a clayey sand material with 20 to 40 percent fines. The sand and gravel could potentially be used or processed to create filter material and the clayey sand would likely be suitable for earth fill. If the sand and gravel is filter compatible with the existing embankment fill without processing, a zoned embankment concept could be implemented, which would reduce costs and disturbances.

Rehabilitation Concepts

Based on our review of historical data, our evaluations, and observations during the site visit, rehabilitation of Silver Lake dam is required to meet current dam safety guidelines. The rehabilitation needs to address the following:

- Inadequate spillway capacity.
- Failed inlet structure.
- Significant seepage through the embankment.
- Significant vegetation on the embankment.
- Deterioration and age of the outlet works CMP.
- Lack of filters and drains.

The concept also needs to limit impacts to the site and required mechanized equipment.

During the meeting with the USFS, two of the alternatives that were discussed were no action or breaching the dam. The no action alternative would not resolve the existing dam safety concerns and also not address the in ability of the Owner to store water. Additionally, the existing damage to the outlet works conduit could worsen, and if the outlet becomes

plugged from debris, soil, or overlying riprap, there would not be a method to lower the reservoir if a dam safety incident occurred. Not being able to the lower the reservoir presents a significant dam safety concern. Monitoring of the dam should occur to confirm the condition does not further deteriorate. Also, the existing obstruction should be removed, the pipe patched, and the gate should remain in the open position until rehabilitation occurs.

Breaching of the dam would result in disturbances, potentially similar to the proposed rehabilitation concept below, and would also eliminate the stored water for the Owner.

Dismissed Concepts

A potential concept to address the inadequate spillway capacity would be to increase the width of the existing spillway from about 30 feet to about 1,000 feet. This concept was dismissed due to the significant quantity of disturbance, blasting, and excavation that would be required to not only widen the spillway to 1,000 feet, but also the excavation would need to extend about 1,000 feet from the existing reservoir pool to the spillway control section. The approximate disturbance area for the widened spillway is shown on Figure 5.

Selected Concept

To address the above items, we propose the following concept:

- Raise the embankment about 6.8 feet to provide routing free board to convey the IDF through the existing spillway. This concept would result in significantly less disturbance than enlarging the spillway.
- Install a filter with the embankment raise to provide filter protection for the embankment.
- Install a slotted PVC pipe within a gravel drain to collect and manage seepage collected from the filter.
- Extend slope protection on the upstream slope of the raised embankment.
- Remove the existing failed inlet structure and install a new concrete structure with a trashrack and hydraulically actuated gate.
- Replace about 15 feet of the outlet works CMP with about 22 feet of new HDPE pipe to extend the outlet to the toe of the embankment and eliminate the over steepened slopes.
- Excavate a new approach channel to the inlet structure.
- Extend the outlet works pipe about 24 feet downstream with high-density polyethylene pipe (HDPE) to accommodate the embankment raise.
- Install a new outlet works outlet structure.
- Slip line the remaining CMP with cured in place pipe (CIPP).

In general, structures should be precast and onsite materials should be used for fill and filters, if possible, to reduce the quantity of imported materials. The concept should be refined as additional data is collected. This concept is shown on Figures 6 and 7.

Concept Modification

It is possible that it may be more economical, and will result in less overall disturbance to completely remove and replace the entire CMP with a new HDPE outlet pipe. This modification is shown in a note on Figure 7.

Quantities of major construction items for the concept are provided in Table 1 and a potential list of major equipment items follows Table 1. These quantities and equipment should be updated when the design is refined, but they provide an initial estimate of quantities and equipment that would be required inputs for the MRDG.

TABLE 1
ESTIMATED MAJOR CONSTRUCTION ITEMS QUANTITIES

Item	Units	Quantity
earth fill	CY	10,000
filter material	CY	1,300
slope protection	CY	660
drain pipe	LF	30
slotted drain pipe	LF	340
inlet structure	LS	1
outlet control unit	LS	1
outlet structure	LS	1
24" dia. HDPE pipe	LF	50
concrete (encase)	CY	70
CIPP	LF	100
removal (30" dia. CMP)	LF	15
removal (existing intake)	LS	1
removal (existing outlet)	LS	1

Estimate of the major equipment required for construction includes:

- 30,000 GVW CIPP Haul and Cure Truck with air compressor
- Tracked excavator
- Tandem axle dump trucks or off-road haul trucks
- Skid steer loader
- D8 dozer
- Wheel loader
- Disc
- Harrow
- Seed drill
- Concrete mixer
- HDPE pipe welder and generator
- Sheep’s foot compactor

- Water pump
- Service vehicle
- Water truck
- Miscellaneous hand tools

Construction is estimated to take several months and will be impacted if equipment and materials can be delivered to the site by ground travel or if they need to be heliportable.

RJH developed an Opinion of Probable Project Costs (OPPC) for three preferred alternatives, based on conceptual-level dam designs. The cost opinion was developed based on an estimated quantity of major construction items and an estimate of unit costs. Estimated unit prices and costs for the work items were derived from the following sources: a) cost estimates provided by material suppliers, b) R.S. Means Heavy Construction Cost Data for 2017, c) bid tabs, and d) experience on similar construction work. Costs from bid tabs were adjusted to account for annual escalation. Area cost factors were applied to unit rates, as appropriate, to adjust estimated rates to the Project's geographic location.

The OPPC was developed as a Class 5 estimate in general accordance with the Association for the Advancement of Cost Engineering (AACE). This level is appropriate for a study phase, where design engineering is between 0 and 2 percent complete. According to the AACE, the reliability of this level of estimate should be considered to be between about minus 20 to 50 percent, and plus 30 to 100 percent, when all costs are compared to 2017 dollars.

The sum of the listed items for each category is defined as the "Base Construction Cost" (BCC). The sum of the BCC, mobilization, bonds, and insurance is defined as the "Direct Construction Cost" (DCC), and includes the following allowances:

- 15 percent of the BCC for the construction contractor's costs for mobilization.
- 2 percent of the BCC for the construction contractor's costs for bonds and insurance.

The total construction cost (TCC) is the DCC plus a 50 percent allowance for final design contingencies, unlisted items, and construction contingencies.

The OPPC is the sum of the TCC, preliminary and final design engineering, owner administration, construction engineering, permitting, and mitigation. For this Project, the OPPC includes allowances of as follows:

- 30 percent of the DCC for geotechnical investigations and preliminary and final design engineering.
- 2 percent of the DCC for legal and owner administration.
- 12 percent of the DCC for construction engineering.
- 20 percent of the DCC for permitting.
- 10 percent of the DCC for mitigation.

This OPPC is based on our professional opinion of the costs and will change as more design details are developed. Actual costs would be affected by a number of factors beyond current control such as supply and demand for the types of construction required at the time of construction and in the Project vicinity, changes in material supplier costs, changes in labor rates, the competitiveness of subcontractors and suppliers, changes in applicable regulatory requirements, and changes in design standards and concepts. Therefore,

conditions and factors that arise as Project development proceeds through design, bidding, and construction may result in Project costs that differ from the estimates documented in this memorandum.

The estimated OPCC is about $1,800,000.

Potential Permitting

Based on the work completed for the concept design, communications with the USFS, and our experience with similar projects, we anticipate that permitting efforts will be required to obtain an EA with the USFS, as described above.

Additionally, the USACE will likely require a Section 404 permit because the work on portions of the dam would be below the ordinary high-water mark of Silver Lake. It is possible that the work could be performed under a Nationwide Permit No. 3, which allows for maintenance of existing structures and fill.

The State Historical Preservation Office should also be consulted to identify if any permitting or documentation would be required because the structure is more than 50 years old.

Conclusions

Based on our review of existing data, evaluations, and a site visit, we offer the following conclusions:

- The lack of maintenance has likely contributed to the deterioration of the outlet works.
- The dam should be classified as high hazard.
- The outlet works size is adequate, and could be sliplined and not adversely impact capacity related to dam safety releases.
- The spillway can only pass the 100-year flood event and modifications will be required to pass the design flood based on the high hazard classification.
- The embankment has had historical seepage issues, mostly on the right side.
- The embankment has significant tree growth on the crest and downstream slope. The trees need to be removed and the roots mitigated.
- The outlet works intake structure has failed and has damaged a portion of the outlet CMP.
- Material has eroded from the upstream edge of the slope above the intake structure. The material has likely eroded into the outlet works (surface erosion not internal erosion).
- Except for the portion of the CMP damage by the inlet structure, the CMP could likely be lined with CIPP or a grouted pipe.
- Blasting would be required to widen the spillway.
- The embankment crest elevation should be increased about 6.8 feet to pass the design flood event.
    - The maximum normal pool elevation would not change.
    - It is possible that suitable embankment borrow may be available within the reservoir pool, below maximum normal water surface.

- There is clean sand and gravel within the reservoir pool, below maximum normal water surface and this material should be evaluated for use as filters and drains for the embankment and potentially concrete aggregate.

- The length of the outlet works should be increased upstream to address over steepened slopes around the existing inlet structure.
- NEPA permitting could potentially be completed within the guidelines of an EA.
- USACE permitting could potentially be completed within the guidelines of Nationwide Permit 3.

Recommendations

The following tasks should be completed during the next phase of study:

1. Coordinate with the USFS and identify required permits for investigations and construction and perform the MRGD.
2. Coordinate with the USACE and identify permitting requirements for the selected concept.
3. Coordinate with the SHPO and identify if any permitting or documentation will be required for rehabilitation.
4. Coordinate with the Owner for site access across private ground.
5. Site-specific topography should be obtained for the reservoir, embankment, and spillway. This is required to provide an adequate base map for preliminary designs and engineering evaluations.
6. Site-specific geologic mapping of the dam and reservoir site should be performed to identify and characterize the geologic units and any geologic hazards that may be present.
7. Subsurface investigations should be performed. Subsurface investigations should include the following items:
   a. Test pits should be excavated within the reservoir below normal high water line of the reservoir to identity potential borrow materials for the earth fill and identify if onsite sand and gravel materials are suitable to use or processed into filter materials.
   b. Borings should be advanced within the embankment to collect undisturbed samples of embankment and bedrock,
   c. Packer permeability tests should be performed within bedrock in the borings to estimate the hydraulic conductivity of the bedrock, which can be used to approximate reservoir seepage losses and identify general foundation treatment requirements.
   d. Test pits and boring locations will be surveyed.
8. Laboratory tests should be performed on soil and bedrock samples collected during the subsurface investigation to identify index, strength, and dispersion properties of the embankment and available borrow materials.
9. Seismic evaluations should be performed to estimate the peak ground accelerations at the site.
10. Borrow sources should be identified based on the findings of the geologic mapping, subsurface investigation, and laboratory testing.

11. The rehabilitation concept presented in this memorandum should be refined as necessary, based on the available borrow material identified during the subsurface investigation and laboratory testing.
12. Material properties should be developed for the existing embankment and borrow materials based on the results of laboratory testing and published correlations for similar materials.
13. Static slope stability analyses should be performed for the maximum embankment section to confirm that the embankment slopes provide adequate stability. The embankment slopes presented in this report should be refined as necessary.
14. Seismic deformation analyses should be performed to estimate the permanent embankment crest deformation that would result from the design peak ground acceleration. The embankment freeboard presented in this report should be refined as necessary to provide adequate residual freeboard.
15. Refine hydraulic and hydrologic evaluations to confirm the height of the embankment raise to convey design flood event.
16. Prepare preliminary designs for the rehabilitation concept.
17. Update the OPCC presented in this memorandum based on the embankment and borrow material conditions identified during the subsurface investigation and any revisions to the concept.

References

U.S. Bureau of Reclamation (Reclamation), ACER Technical Memorandum No. 3, *Criteria and guidelines for evacuating storage reservoirs and sizing low-level outlet works,* 1982.

U.S. Bureau of Reclamation (Reclamation), ACER Technical Memorandum No. 11, *Downstream Hazard Classification Guidelines,* 1988.

Attachments

Figures 1 through 7
Attachment A – United States Forest Service documents
Attachment B – United States Forest Service September 18, 2017 Meeting Minutes
Attachment C – Wilderness Policy Documents
Attachment D – Dam Safety Inspection Form and Photographs
Attachment E – Original Drawings and Specifications
Attachment F – Previous Dam Safety Inspection Reports
Attachment G – Special Use Permits

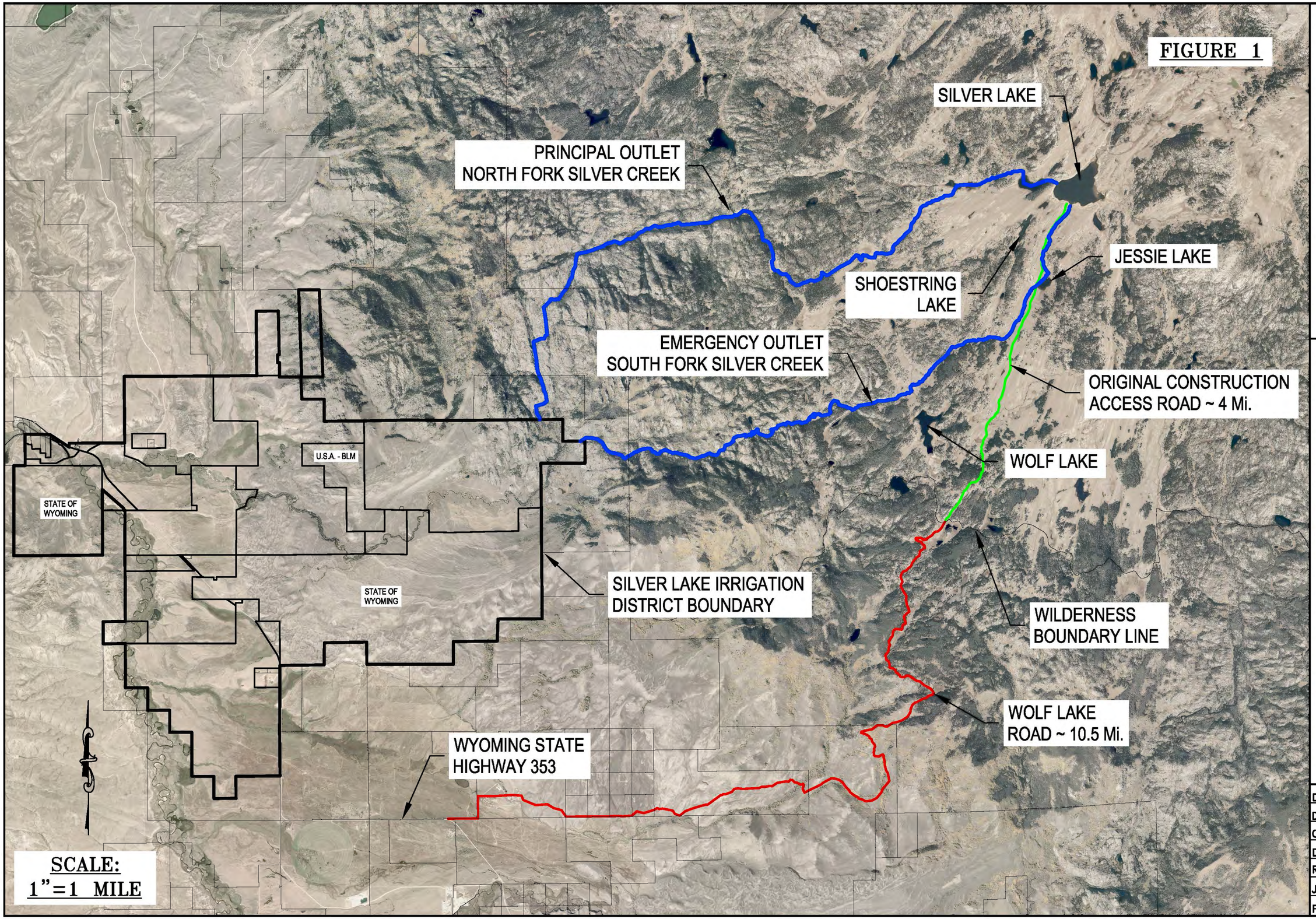

RIO VERDE
ENGINEERING
(307) 367-2826
FAX# (307)-367-2546
PINEDALE, WYOMING

SILVER LAKE DAM OUTLET RECONSTRUCTION
PROJECT FEASIBILITY STUDY
—CONCEPT REHABILITATION PLAN—
LOCATED IN
BRIDGER WILDERNESS,
SUBLETTE COUNTY, WYOMING

DESIGNED BY:
DRAWN BY: MTJ
CHECKED BY: MCE
DATE: 12/18/17
REV:
JOB NO: 4183
PAGE: 1 OF 4

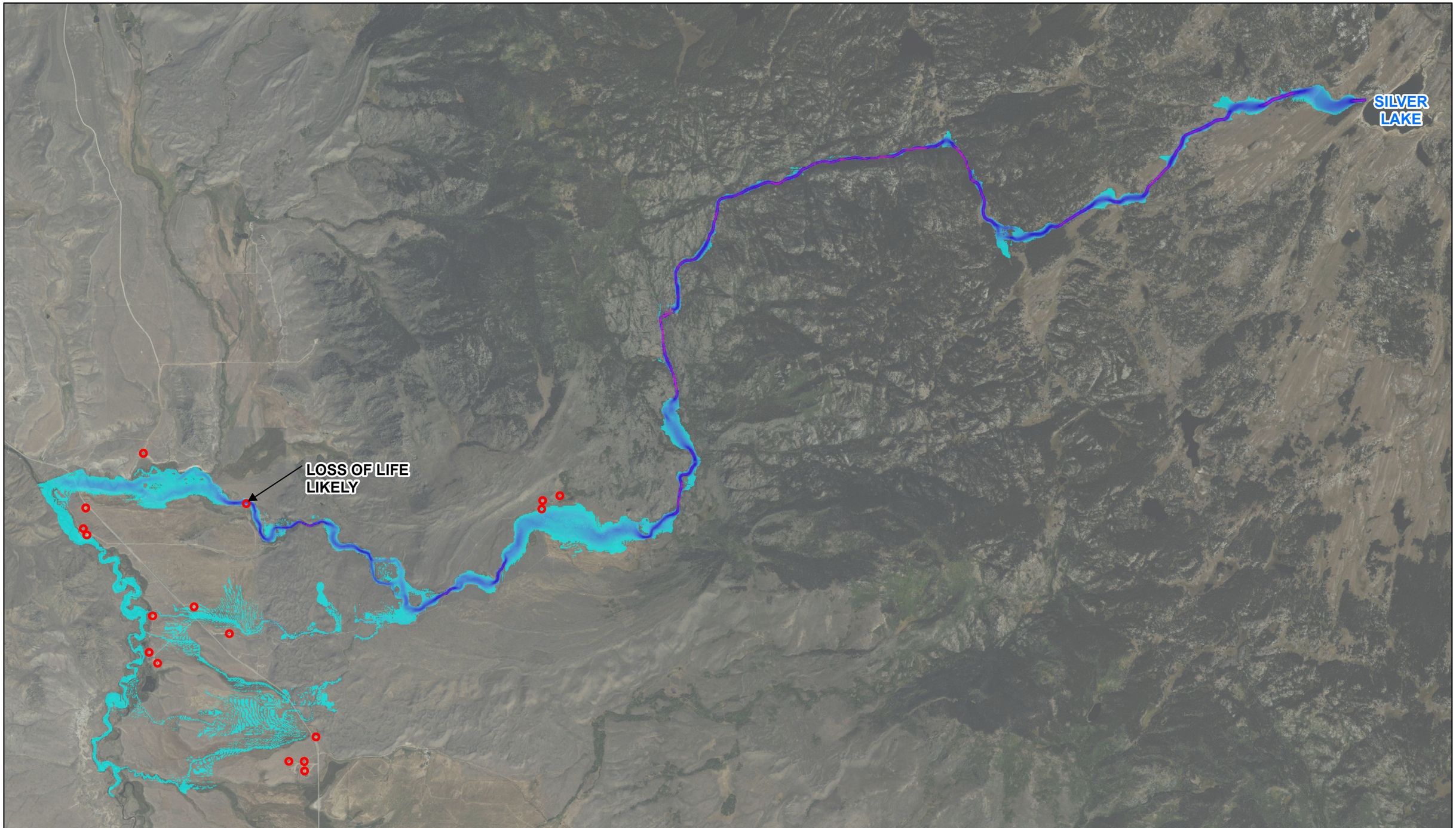

Depth x Velocity (ft^2/s)

High : 193

Low : 0

Structures

FIGURE MUST BE REPRODUCED IN COLOR

Datum: NAVD 1988

N

0 2,000 4,000 8,000 Feet

RJH CONSULTANTS, INC.

SILVER LAKE DAM HAZARD CLASSIFICATION	DEPTH x VELOCITY
PROJECT NUMBER 16123	January 2018 **Figure 2**

P:\16123 - New Fork Level 1\Engineering\1005_storage\GIS\1005\16123 Figure 2.mxd

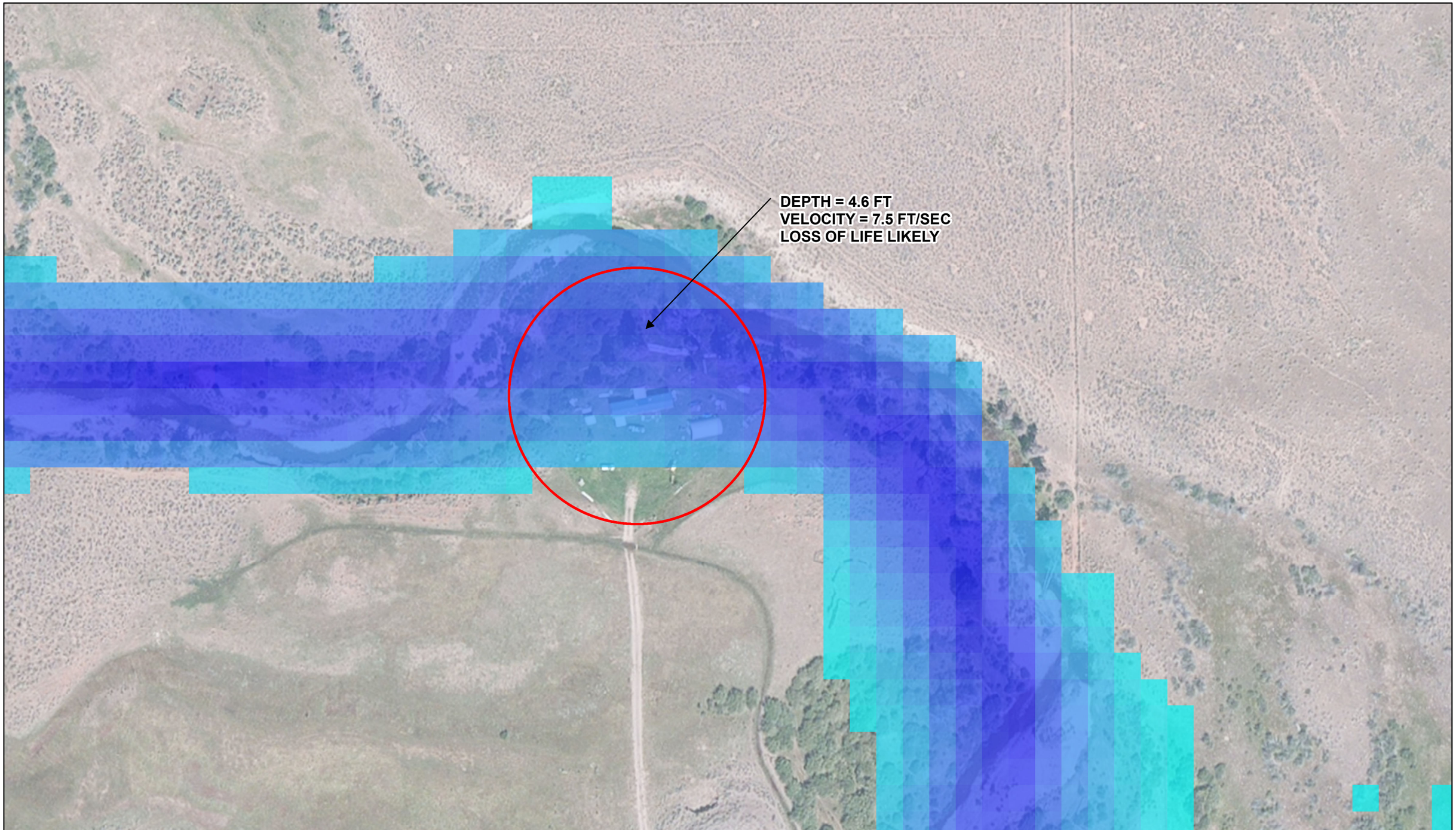

Depth x Velocity (ft^2/s)

High : 193

Low : 0

Structures

FIGURE MUST BE REPRODUCED IN COLOR

Datum: NAVD 1988

N

0 50 100 200 Feet

RJH CONSULTANTS, INC.

SILVER LAKE DAM
HAZARD CLASSIFICATION

DEPTH x VELOCITY

PROJECT NUMBER 16123

January 2018

Figure 3

P:\16123 - New Fork Level 1\Engineering\1005_storage\GIS\1005\16123 Figure 3.mxd

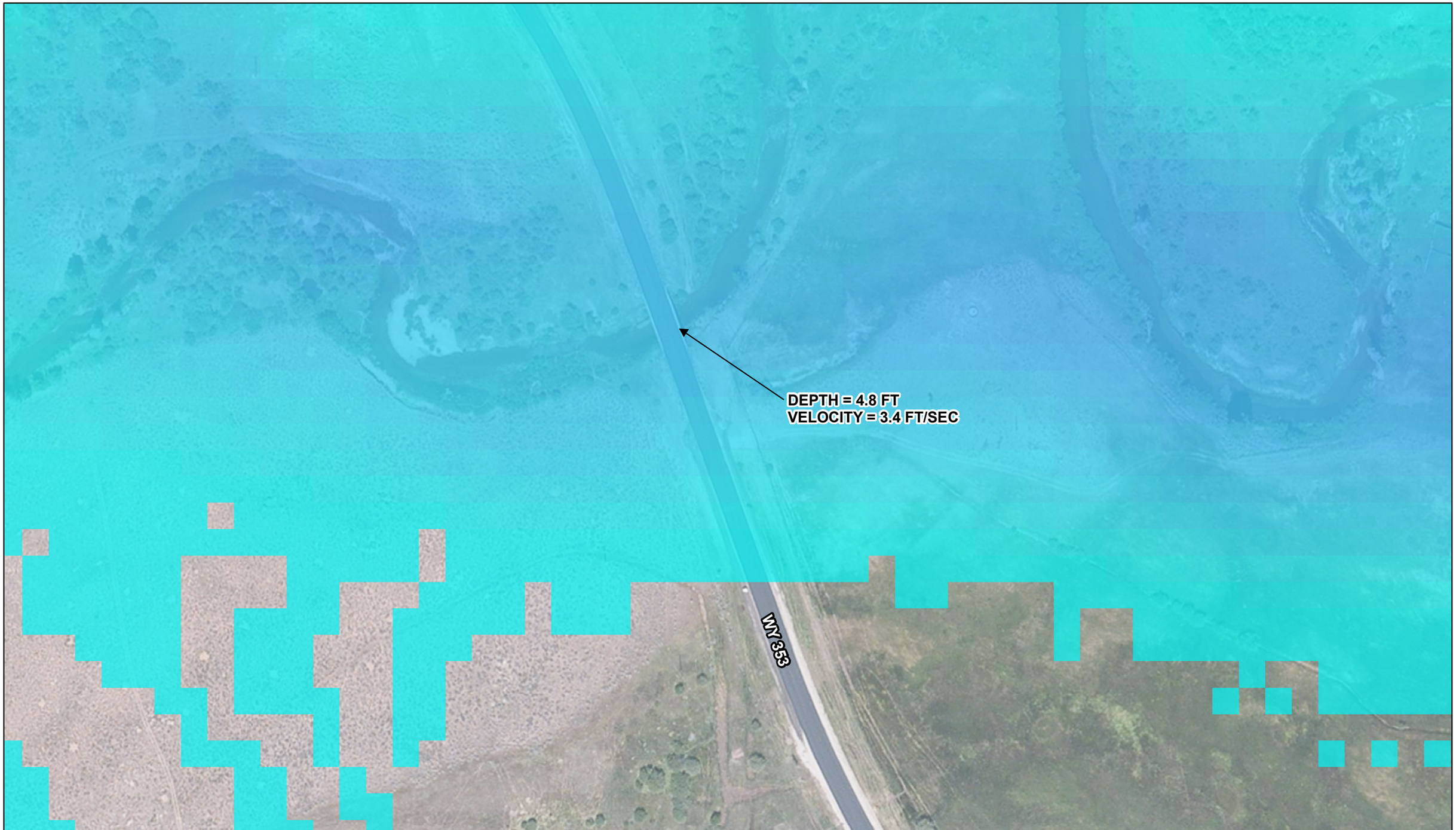

Depth x Velocity (ft^2/s)

High : 193

Low : 0

Structures

FIGURE MUST BE REPRODUCED IN COLOR

Datum: NAVD 1988

N

0 50 100 200 Feet

RJH CONSULTANTS, INC.

SILVER LAKE DAM
HAZARD CLASSIFICATION

DEPTH x VELOCITY

PROJECT NUMBER 16123

January 2018

Figure 4

P:\16123 - New Fork Level 1\Engineering\1005_storage\GIS\1005\16123 Figure 4.mxd

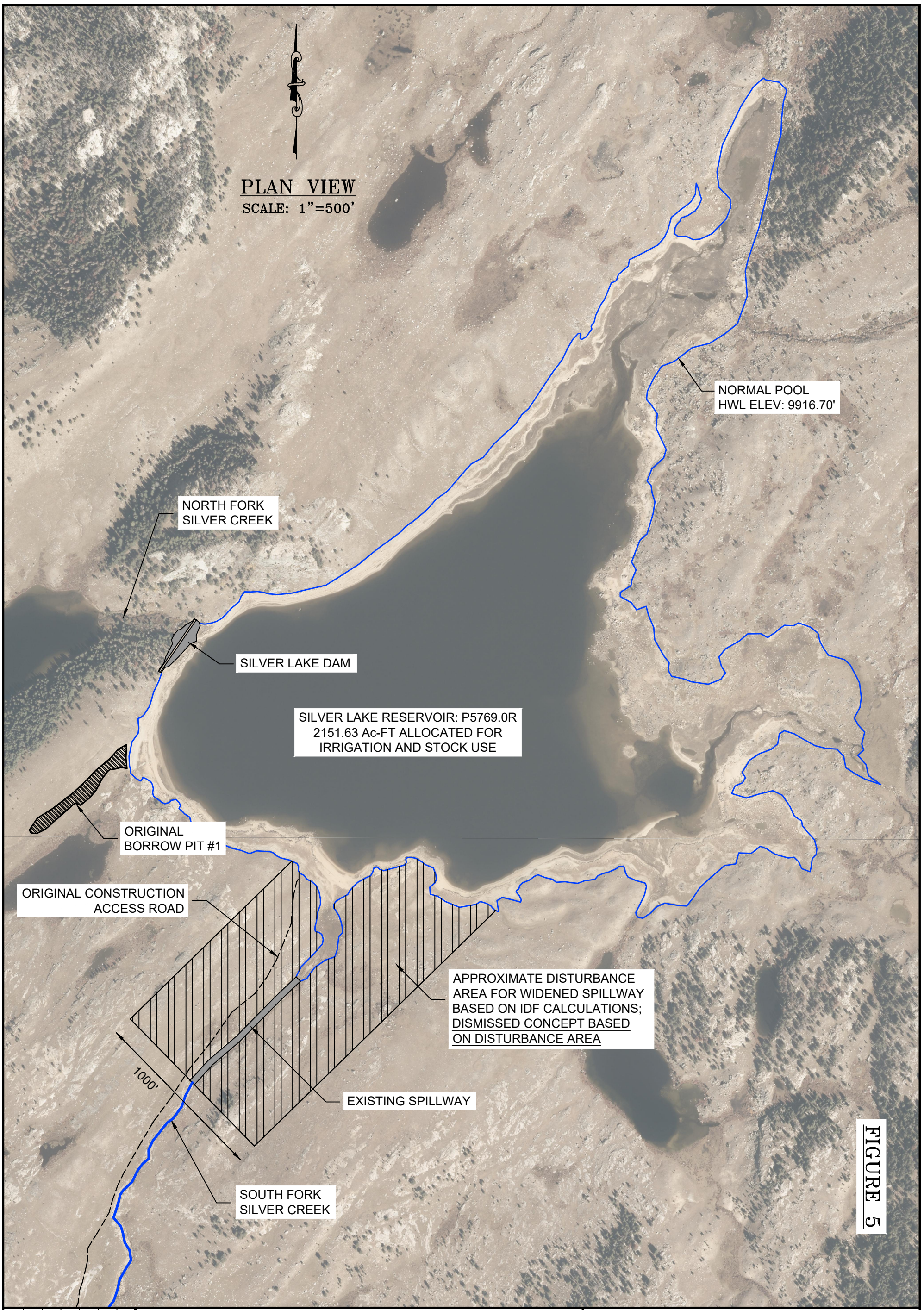

FIGURE 5

DESIGNED BY:
DRAWN BY: MTJ
CHECKED BY: MCE
DATE: 12/18/17
REV: 1/24/18
JOB NO: 4183
PAGE: 2 OF 4

SILVER LAKE DAM OUTLET RECONSTRUCTION
PROJECT FEASIBILITY STUDY
-CONCEPT REHABILITATION PLAN-
LOCATED IN
BRIDGER WILDERNESS,
SUBLETTE COUNTY, WYOMING

RIO VERDE ENGINEERING
(307) 367-2826
FAX# (307)-367-2546
PINEDALE, WYOMING

FIGURE 6

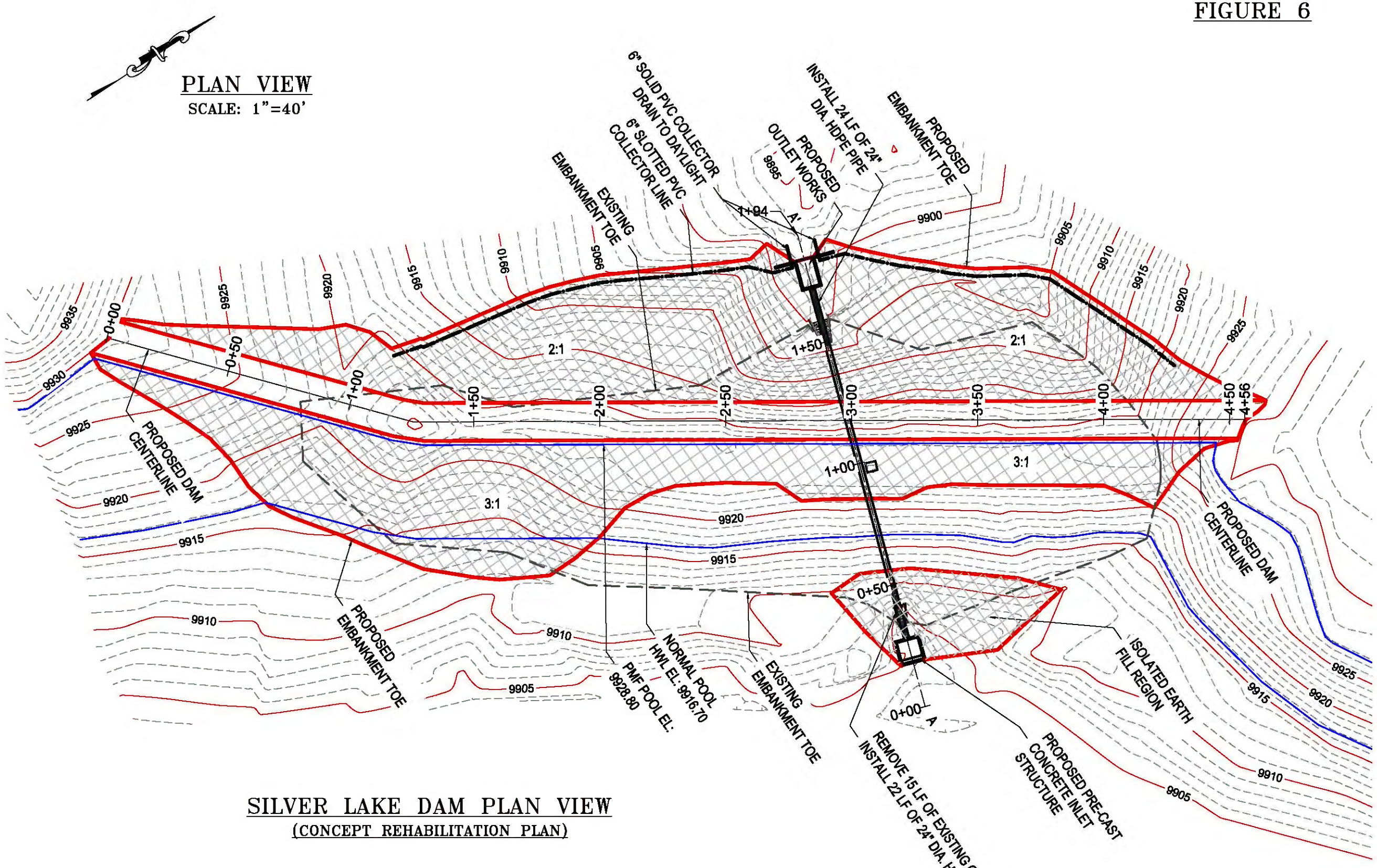

SILVER LAKE DAM PLAN VIEW
(CONCEPT REHABILITATION PLAN)

RIO VERDE ENGINEERING
(307) 367-2826
FAX# (307)-367-2546
PINEDALE, WYOMING

SILVER LAKE DAM OUTLET RECONSTRUCTION
PROJECT FEASIBILITY STUDY
—CONCEPT REHABILITATION PLAN—
LOCATED IN
BRIDGER WILDERNESS,
SUBLETTE COUNTY, WYOMING

DESIGNED BY:
DRAWN BY: MTJ
CHECKED BY: MCE
DATE: 12/18/17
REV:
JOB NO: 4183
PAGE: 3 OF 4

FIGURE 7

SILVER LAKE DAM PROFILE VIEW A–A'

(CONCEPT REHABILITATION PLAN)

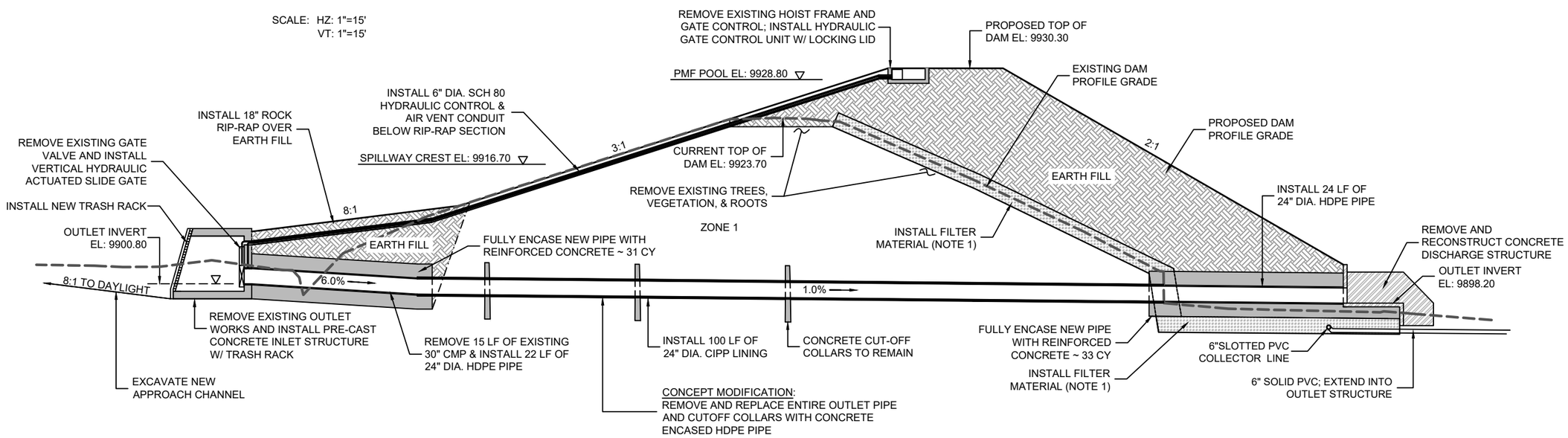

NOTES:

1.) IF ON-SITE SAND AND GRAVEL IS SUITABLE FOR FILTER MATERIAL WITHOUT PROCESSING, EXPAND FILTER SIZE FOR A ZONED EMBANKMENT RAISE.

2.) REMOVE BOULDERS ALONG DOWNSTREAM TOE OF DAM AND BACKFILL ALL VOIDS AND RODENT BURROWS WITH FILTER MATERIAL.

ZONE 1: EXISTING DAM EMBANKMENT TO REMAIN INTACT

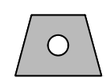

TYPICAL X-SECTION
REINFORCED CONCRETE PIPE ENCASEMENT

RIO VERDE ENGINEERING
(307) 367-2826
FAX# (307)-367-2546
PINEDALE, WYOMING

SILVER LAKE DAM OUTLET RECONSTRUCTION
PROJECT FEASIBILITY STUDY
–CONCEPT REHABILITATION PLAN–
LOCATED IN
BRIDGER WILDERNESS,
SUBLETTE COUNTY, WYOMING

DESIGNED BY:
DRAWN BY: MTJ
CHECKED BY: MCE
DATE: 12/18/17
REV: 1/24/18
JOB NO: 4183
PAGE: 4 OF 4

ATTACHMENT A

UNITED STATES FOREST SERVICE DOCUMENTS

USDA FOREST SERVICE

DAM MAINTENANCE INSPECTION REPORT

Ref: FSM 7572.23

1. REGION (3-4)	2. FOREST (5-6)	3. RANGER DIST. (7-8)	4. FOREST INV. NO. (9-12)
04	03	07	~~1008~~ 2011

5. NAME OF DAM: **Silver Lake Dam**

BLOCK I - MAINTENANCE INSPECTION CHECKLIST

ITEM (Describe deficient items on attached sheets).	NEEDED REPAIRS (By priority) 1	2	None
1. EMBANKMENTS			
a. Slumps, slides			X
b. Settlement			X
c. Cracks			X
d. Seepage			X
e. Erosion			X
f. Slope facing			X
g. Debris			X
h. Traffic damage			X
i. Brush, trees			X
j. Burrows			X
k. Other			X
CONCRETE STRUCTURES			
c. Settlement			X
b. Overturning			X
c. Heaving			X
d. Cracks, spalls		X	
e. Joints			X
f. Undermining			X
g. Drains			X
h. Seepage			X
i. Other			X
3. GATES, CONTROLS			
a. Corrosion			X
b. Mechanical			X
c. Structural			X
d. Clogging			X
e. Access **Locked**			X
f. Other			X

ITEM (Describe deficient items on attached sheet)	NEEDED REPAIRS (By priority) 1	2	None
4. CLOSED CONDUITS **24" pipe outlet**			
a. Settlement			X
b. Displacement			X
c. Cracks, spalls			X
d. Seepage			X
e. Clogging			X
f. Erosion			X
g. Corrosion			X
h. Joints			X
i. Other			X
5. SPILLWAYS			X
a. Obstructions			X
b. Erosion			X
c. Structural			X
d. Vegetation			X
e. Other			X
6. DOWNSTREAM CONDITION			
a. Backwater			X
b. Erosion			X
c. Bars, pools			X
d. Boils, piping			X
e. Other			X
7. RESERVOIR			
a. Shore erosion			X
b. Debris			X
c. Sediment			X
d. Other			X
8. OTHER (Identify)			
a.			X
b.			
c.			
d.			

CARD NO. 12

(OVER)

7500-2 (2/69)

BLOCK II - MAINTENANCE COST ESTIMATE

ITEM OF WORK	UNIT	UNIT COST	QUANTITY PRIORITY 1	QUANTITY PRIORITY 2	COST PRIORITY 1	COST PRIORITY 2
2 (d.) Repair cracked concrete around outlet control stem	job	$500		job		$500
TOTALS (*Enter in Block III, below*) ▶						$500

BLOCK III - SUMMARY MAINTENANCE INSPECTION REPORT

1. DATE OF INSP. (13 18): 8 / 21 / 75 (MO. / DAY / YR.)

2. HIGHEST PRIORITY CHECKED IN BLOCK 1. (19): 2

3. EST. MAINT. COST ($1,000)
a. PRIORITY 1 (20 23): ---.L
b. PRIORITY 2 (24 27): ---.5

4. EST. ENGINEER TIME NEEDED (MAN-HR.)
a. PRIORITY 1 (28 30): --0
b. PRIORITY 2 (31 33): --0

5. EST. AID & TECH. TIME NEEDED (MAN-HR.)
a. PRIORITY 1 (34 36): --0
b. PRIORITY 2 (37 39): --0

6. NOTICE TO OWNER (40): YES / NO

7. DATE OF NOTICE (41 46): --/--/-- (MO. / DAY / YR.)

8. LIMITATION (47): YES / NO — N

9. TYPE OF LIMITATION (48): F

10. REVISED ESTIMATE OF INSPECTION TIME (MAN-HRS.)
a. ENGINEER (49-50): 2
b. FOREST OFFICER (51-52): --
c. AID & TECH. (53-54): --

CARD NO. 12

REPORTED BY (*Name & signature*)	TITLE	DATE
Roy R. Grant	Civil Engineer	12-10-75

GPO 870-81

Exhibit A

U.S. FOREST SERVICE

SUPPLEMENTAL NARRATIVE SHEET DAM MAINTENANCE INSPECTION REPORT (Ref: FSM 7572.23)	1. Region (3-4)	2. Forest (5-6)	3. Ranger Dist (7-8)	4. Forest Inv. No. (9-12)
	0 4	0 3	0 7	~~10 08~~ 2011
	5. Name of Dam: Silver Lake Dam			

ITEM		DEFICIENCY
		People present at inspection: Qualified Engineer, Roy Grant; Foresters Dave Walker and Don Stewart
2(d)	2	Concrete is cracked around outlet control stem.
		This lake has an outlet stream around the lake to the southeast from the dam which allows approximately four feet of freeboard on the dam above maximum lake level. There is also a spillway in the dam which is higher than the outlet stream and appears to have never had water flowing through it.

Reported By (Name and Signature)	Title	Date
Roy R. Grant	Civil Engineer	12-10-75

(SUPPLEMENTAL SHEET TO WO FORM 7500-2)

R-4 - 7500 - 2 (4/74)

UNITED STATES DEPARTMENT OF AGRICULTURE
FOREST SERVICE

FILE

DISTRICT FOREST RANGER
PINEDALE RANGER DISTRICT
PINEDALE, WYOMING 82941

2720
January 13, 1976

Mr. Jim King
% Silver Lake Irrigation Company
Boulder, Wyoming 82923

Dear Mr. King:

Enclosed is a copy of the inspection of the dam on Silver Lake conducted in August, 1975. You will note that the only deficiency observed was cracked concrete around the outlet control stem. These cracks should be patched to prevent further deterioration. As this is considered to be a priority 2 job there is no great urgency for making such repairs immediately, however, they should be preformed within the next couple of years. Would you please give this matter consideration and let us know when you intend to schedule these repairs.

Sincerely,

Dave Walker
For
TED E. COX
District Forest Ranger

Enclosures

PINEDALE R.D.
BRIDGER-TETON N.F.
APR 8 1976

Route to:	Action	Int
Ranger		
Forester		
Range Con.		
Wilderness		
Dev. Rec.		
C. Eng.		
D. Clerk		
Rec. Plan.		
Timber For.		

Dear Sirs:

We plan to caulk these cracks with a special compound purchased through the SCS office sometime in July or Aug. of '76.

Sincerely,
James H. King
Sec Treasurer
Silver Lake Irrigation Dist.

6200-11 (1/69)

Pinedale Ranger District
P.O. Box 220
Pinedale, WY 82941

2720 Special Uses
(2320)

August 23, 1982

Silver Lake Dam

Forest Supervisor

Mr. Jim King, Silver Lake Irrigation Company, made a request for authorization to use a vehicle and motorized equipment in the Bridger Wilderness for repair of the Silver Lake Dam. This dam was originally constructed around 1928 and the current permit, 5/15/81, lists both the dam site and the old wagon road.

There is an existing wagon road or jeep road to Silver Lake. This road can be used without rebuilding. Vehicle access is needed to haul cement, sand, and gravel to the dam as well as a small concrete mixer. Motorized equipment, the concrete mixer, is needed to mix concrete for repair of a concrete collar around the mouth of the outlet pipe. See 1975 inspection report.

The work is planned for October, after the lake level is down. Hunting season in this area is September 20 to October 31. This will be maintained and will not increase the size or purpose of the reservoir. It should take no more than three to four days to accomplish. I recommend that approval be given for vehicle use of the road and use of motorized equipment for the repair of the dam. As per FSM 2323.04 - 12 the authority for approval is designated to the Regional Forester.

Sam Warren

SAM E. WARREN
District Ranger

SEWARREN:lm

Bridger-Teton National Forest
Box 1888
Jackson, WY 83001

2720

September 9, 1982

Mr. James T. King
Silver Lake Irrigation District
Boulder, WY 82923

Dear Mr. King:

District Ranger Sam Warren has advised me of your request to use a vehicle and motorized equipment within the Bridger Wilderness for repair of the Silver Lake dam. My understanding is that you plan to haul cement, sand, and gravel and a small concrete mixer to the site of the dam by truck, and would mix about one cubic yard of concrete for repair of a concrete collar around the mouth of the outlet pipe.

It is the responsibility of the Regional Forester, Intermountain Region, to approve a request such as yours for use of motorized vehicles and mechanized equipment in wilderness. It is my responsibility, however, to make a recommendation to the Regional Forester regarding your request. It is also my responsibility to administer the special-use permit issued to the Silver Lake Irrigation District for operation and maintenance of the Silver Lake dam and reservoir. I would like to use this letter as the instrument which documents my decision regarding your request, as this pertains to my recommendation to the Regional Forester, as well as to my responsibility to assure that the terms of the special-use permit are met.

As you are probably aware, the Wilderness Act generally prohibits the use of motorized vehicles and mechanized equipment in designated wildernesses. Permanent roads are prohibited as are temporary roads except when necessary to meet minimum requirements for administration of the wilderness. Motorized transportation and mechanized equipment may be allowed for maintenance of water management improvements, such as the Silver Lake dam, that existed at the time of establishment of the wilderness, but <u>only when there is no other reasonable alternative</u>.

It is my feeling that there is a reasonable alternative to the use of vehicle transport of concrete materials and the use of a small concrete mixer to carry out the needed repair work. This would be through the use of horse transport of the materials and hand-mixing of the concrete. I recognize that this would be less convenient, take more time, and cost more. I am also aware that the old road to the dam could still be traveled by truck. Nevertheless, considering the requirement that the spirit of the Wilderness Act be met and knowing the relatively small amount of concrete that will be needed, I believe that horse travel and the use of hand tools would be practical.

Based upon these reasons, I would be forced to recommend disapproval if I was sending your request on to the Regional Forester for his consideration. However, it will not be necessary to send your request to him, since I have concluded that the request should be denied under the terms of your special-use permit, approved May 15, 1951, which authorized use of National Forest land for construction and operation of the dam and reservoir.

A copy of this permit that was signed by yourself and by Forest Supervisor, H.H. Dresskell is enclosed. Please note the statement on the face of the permit that "the operation and maintenance of the reservoir will be accomplished by horse travel". This statement and Condition #23 of the permit that states in part, "After completion of the project the road, spillway cuts, borrow pits and other land scars will be smoothed to conform with the general contour of the adjacent area, topsoil replaced, then revegetated in accordance with instructions of the Forest Supervisor", make it clear to me that it was Supervisor Dresskell's intention when the permit was issued to allow the use of motorized and mechanized equipment only during the construction of the dam, and to obliterate the road thereafter. This intention is also reaffirmed by the following statements quoted from Supervisor Dresskell's report in early 1951 on how the dam reconstruction would affect wilderness area policy:

- Motorized transportation will be allowed during dam construction only.

- Any road constructed to within one half mile of the wilderness area boundary allows motorcar access into the wilderness area. After completion of the dam reconstruction, the road will be blasted at a dugway about two miles below the wilderness area boundary to effectively barricade all vehicular travel above that point. This action will effectively eliminate possible motorized travel into the wilderness area over the Pocket Creek road which existed at the creation of the area.

To me, Supervisor Dresskell's intention when the special-use permit was issued is clear. Further, his intention as reflected in the permit, conforms perfectly with the current policy for maintenance of water management improvements in wilderness. Allowing vehicular access now would not be proper in view of the permit requirements as well as the policy for wilderness management. Although it is obvious that the road has not been fully obliterated and barricaded since construction of the dam was finished, Ranger Warren advises me that the road tracks have now revegetated and stabilized fairly well and that there has been no recent motor vehicle travel above the wilderness boundary. I will ask Ranger Warren to permanently barricade the road outside of the boundary to eliminate the possibility of vehicle use in the future.

Based on the foregoing discussion, it is my decision to deny your request to haul materials to the dam using a vehicle and to use mechanized equipment to mix concrete. To conform with wilderness management policy and to comply with the terms of the special-use permit of 05/15/50, which you agreed to accept, horse travel will be required to haul materials and concrete must be mixed using hand tools. Please contact Ranger Warren or myself, if you have questions about this decision.

If you feel that my decision is in error or is contrary to existing laws and regulations for management of the National Forest, you may appeal my decision to the Regional Forester under Reg. 36 CFR 211.19. You must make your appeal to me in writing within 30 days of receipt of this letter stating why you feel my decision is in error. A copy of the appeal regulations is enclosed.

Sincerely,

REID JACKSON
Forest Supervisor

Enclosures (2)

cc:D-7
D-6
Regional Forester R4
R4-Rn

JCombs:nh (9/7/82)

ATTACHMENT B

UNITED STATES FOREST SERVICE SEPTEMBER 18, 2017 MEETING MINUTES

Memo to File

September 18, 2017
New Fork River Watershed, Level 1 Study
Silver Lake Meeting

A meeting to discuss the Silver Lake Dam issues was held at the Forest Service office in Pinedale, Wyoming on September 18, 2017. An attendance list is attached.

The purpose of the meeting was to discuss the operational issues created by failing infrastructure. Uncertainty in the stability of the dam in light of the recent dam breach analysis performed by RJH Consultants, subcontractor to Tetra Tech , was expressed. The most important question posed to the Forest Service was what steps were required to use motorized equipment to perform the rehabilitation work required.

Discussion items are as follows:

1. Wilderness Area – The Silver Lake Dam is located above Wolf Lake in the Bridger Wilderness Area. However, when the enlargement of the dam was constructed, the area was considered wilderness based on a proclamation dated May 28, 1937 setting aside the Bridger Wilderness Area. A contract for construction of the enlargement of the existing dam was signed in 1951. In the specification document is the statement "The Forest Service recognizes easements, rights-of-way and special use permits that have been established by the Silver Lake Irrigation District that own the reservoirs and have been granted permits to cover construction enumerated in the specifications". The USFS (U.S. Forest Service) place special conditions on the construction and contractor. The 1964 Wilderness Act established a National Wilderness Preservation System.

2. Further work will need to be completed in light of the breach analysis to reclassify the dam from low hazard to high hazard due to possible loss of infrastructure and lives down stream.

3. Required repairs to the dam and emergency spillway will require the use of equipment in the wilderness area.

4. The Special Use Permit for the Enlarged Dam was dated November 27, 1946 and signed on May 15, 1951. Some discussion ensued about redoing the Special Use Permit.

5. Regional office of the USFS would have to approve the use of equipment in the Bridger Wilderness Area.

6. Andrew Linch discussed the WWDC's support and future involvement and funding.

Once the above discussions were finished, Rob Hoelscher, USFS Pinedale Ranger, indicated that it was possible to use equipment within the Bridger Wilderness Area to repair the dam. Discussion moved to how the Silver Lake Irrigation District, Water Development Commission, and USFS could partner to accomplish that goal.

Steps necessary to perform the NEPA with an EA were outlined. The NEPA would include at least the following options:

1. No action.

2. Breach the dam.

3. Mechanical Option 1 – line the existing CMP and replace the headgate structure.

4. Mechanical Option 2 – replace the existing pipe through the dam and replace the headgate structure.

Both options 3 and 4 would include enlarging the emergency spillway to conform to safety of dam requirements for a high hazard dam.

An important part of the process would be the MRDG – Minimum tool Analysis. A copy of an example from the Hawks Rest Bridge Project in the Teton Wilderness created August 1, 2017 was provided by the Pinedale Forest Service office. The Minimum Tool Analysis would be the basis for the NEPA document. The Minimum Tool Analysis would evaluate the 4 scenarios and their respective requirements.

The meeting adjourned after it was decided that a site visit to determine the dam stability was the next step in the process.

Mark C. Eatinger,
Rio Verde Engineering

MARK EATINGER Rio Verde Engineering
307-367-2826 rioverde@wyoming.com
Mike Jackson Rio Verde Engineering
" "
Cindy Stein USFS - Pinedale 307-367-5717 cstein@fs.fed.us
Patrick Riggan USFS priggan@fs.fed.us 307-367-5719
Gary Hayward USFS 307-367-5723 ghayward@fs.fed.us
Rob Hoelscher USFS 307 367 5710 rhoelscher@fs.fed.us
Suzy Michnevich Silver Lake Irrig Dist 307 360-5496 cowsound@centurylink.net
RON STEG Tetra Tech 307 883 9203, ron.steg@tetratech.com
Miranda Galidima - Lands Special Uses
307-739-5532 miranda.galidima@fs.fed.us
Andrew Linch WWDO 307-777-6446 andrew.linch@wyo.gov

ATTACHMENT C

WILDERNESS POLICY DOCUMENTS

6

Wilderness Preservation and Management

A wilderness is an area where the earth and its community of life are untrammeled by man, where man himself is a visitor who does not remain.

All NPS lands will be evaluated for their eligibility for inclusion within the national wilderness preservation system. For those lands that possess wilderness characteristics, no action that would diminish their wilderness eligibility will be taken until after Congress and the President have taken final action. The superintendent of each park containing wilderness will develop and maintain a wilderness management plan or equivalent document. Wilderness considerations will be integrated into all planning documents to guide the preservation, management, and use of the park's wilderness area and ensure that wilderness is unimpaired for future use and enjoyment as wilderness.

6.1 General Statement

The National Park Service will manage wilderness areas for the use and enjoyment of the American people in such a manner as will leave them unimpaired for future use and enjoyment as wilderness. Management will include the protection of these areas, the preservation of their wilderness character, and the gathering and dissemination of information regarding their use and enjoyment as wilderness. The purpose of wilderness in the national parks includes the preservation of wilderness character and wilderness resources in an unimpaired condition and, in accordance with the Wilderness Act, wilderness areas shall be devoted to the public purposes of recreational, scenic, scientific, educational, conservation, and historical use.

The policies contained in this chapter are supplemented by Director's Order #41: Wilderness Preservation and Management and Reference Manual 41, which accompanies the director's order. Those documents should be referred to for more detailed information on the topics covered in this chapter.

6.2 Identification and Designation of the Wilderness Resource

The National Park Service will use the following wilderness study process to consider NPS areas for inclusion within the congressionally designated national wilderness preservation system.

6.2.1 Assessment of Wilderness Eligibility or Ineligibility

All lands administered by the National Park Service, including new units or additions to existing units since 1964, will be evaluated for their eligibility[2] for inclusion in the national wilderness preservation system. Additionally, lands that were originally assessed as ineligible for wilderness because of nonconforming or incompatible uses must be reevaluated if the nonconforming uses have been terminated or removed. A wilderness eligibility assessment will consist of a brief memorandum from the regional director to the Director that makes a managerial determination as to the eligibility of the park lands for wilderness designation.

The assessment may include information important for other park planning purposes, and other park planning efforts may likewise produce information important to wilderness. The assessment should therefore be completed in a timely manner and thoughtfully coordinated with other planning activities. The assessment may be combined with the wilderness study described below if the combined document can be completed in a timely manner.

[2] *Management Policies 2001* used the term "suitability" to refer to the Park Service's initial screening assessment as to whether lands meet the minimum criteria for inclusion in the national wilderness preservation system. The Wilderness Act, however, uses "suitability" to refer to the Secretary's determinations in forwarding recommendations to the President. For purposes of clarity, the NPS initial screening assessment has been renamed an "eligibility" assessment. The change from "suitability" to "eligibility" in no way lessens the protected status of these lands.

6.2.1.1 Primary Eligibility Criteria

NPS lands will be considered eligible for wilderness if they are at least 5,000 acres or of sufficient size to make practicable their preservation and use in an unimpaired condition, and if they possess the following characteristics (as identified in the Wilderness Act):

- The earth and its community of life are untrammeled by humans, where humans are visitors and do not remain.
- The area is undeveloped and retains its primeval character and influence without permanent improvements or human habitation.
- The area generally appears to have been affected primarily by the forces of nature, with the imprint of humans' work substantially unnoticeable.
- The area is protected and managed so as to preserve its natural conditions.
- The area offers outstanding opportunities for solitude or a primitive and unconfined type of recreation.

6.2.1.2 Additional Considerations in Determining Eligibility

In addition to the primary eligibility criteria, the following considerations should be taken into account in determining eligibility:

- A wilderness area may contain significant ecological, geological, or other features of scientific, educational, scenic, or historical value, although it does not need these things to be considered eligible for wilderness designation.
- Lands that have been logged, farmed, grazed, mined, or otherwise used in ways not involving extensive development or alteration of the landscape may also be considered eligible for wilderness designation if, at the time of assessment, the effects of these activities are substantially unnoticeable or their wilderness character could be maintained or restored through appropriate management actions.
- An area will not be excluded from a determination of wilderness eligibility solely because established or proposed management practices require the use of tools, equipment, or structures if those practices are necessary to meet minimum requirements for the administration of the area as wilderness.
- In the process of determining wilderness eligibility, lands will not be excluded solely because of existing rights or privileges (e.g., mineral exploration and development, commercial operations, agricultural development, grazing, or stock driveways). If the National Park Service determines that these lands possess wilderness character, they may be included in the eligibility determination so that they can be considered for designation as wilderness or potential wilderness.
- Lands containing aboveground or buried utility lines will normally not be considered as eligible for wilderness designation, but they can be considered as

eligible for "potential" wilderness designation if there is a long-term intent to remove the lines. No new utility lines may be installed in wilderness, and existing utility lines may not be extended or enlarged except as may be allowed pursuant to section 1106 of the Alaska National Interest Lands Conservation Act (16 USC 1133(c)).

- Historic features that are primary attractions for park visitors will generally not be recommended as eligible for wilderness designation. However, an area that attracts visitors primarily for the enjoyment of solitude and unconfined recreation in a primitive setting may also contain cultural resource features and still be included in wilderness. Historic trails may serve and be maintained as part of the wilderness trail system, as identified and coordinated within an approved wilderness management plan and the park's cultural resource plan. The presence of historic structures does not make an area ineligible for wilderness. A recommendation may be made to include a historic structure in wilderness if (1) the structure would be only a minor feature of the total wilderness proposal; and (2) the structure will remain in its historic state, without development.
- Dams within or affecting the area being studied do not make a waterway ineligible for wilderness designation. The nature and extent of impacts and the extent to which the impacts can be mitigated would need to be addressed in subsequent wilderness studies.
- The established use of motorboats, snowmobiles, or aircraft does not make an area ineligible for wilderness. The nature and extent of any impacts on the environment and on eligibility, and the extent to which the impacts can be mitigated would need to be addressed in subsequent wilderness studies, along with the possible need to discontinue the use.
- Overflights do not make an area ineligible for wilderness designation. The nature and extent of any overflight impacts and the extent to which the impacts can be mitigated would need to be addressed in subsequent wilderness studies.

6.2.1.3 The Assessment Process

The Service will involve the public in the wilderness eligibility assessment process through notification of its intentions to conduct the assessment and publication of the Director's determination, either as "eligible" or as "ineligible" for further wilderness study. Notification will include the issuance of news releases to local and regional news media and the publication of a final eligibility determination in the *Federal Register*. The final determination of an area's eligibility, or ineligibility, for further study must be approved by the Director before publication of the final eligibility determination in the *Federal Register*. For areas determined to be ineligible for wilderness designation, the wilderness preservation provisions in the NPS *Management Policies* are not applicable. However, ineligible lands will be managed in accordance with the NPS Organic Act and all other laws, executive orders, regulations, and policies applicable to units of the national park system.

6.2.2 Wilderness Studies

Lands and waters found to possess the characteristics and values of wilderness, as defined in the Wilderness Act and determined eligible pursuant to the wilderness eligibility assessment, will be formally studied to develop the recommendation to Congress for wilderness designation. The National Park Service will continue to undertake wilderness studies of all lands that have been determined to be eligible as a result of the wilderness eligibility assessment. Also, studies will be made of lands for which subsequent legislation directs that wilderness studies be completed.

Wilderness studies will be supported by appropriate documentation of compliance with the National Environmental Policy Act and the National Historic Preservation Act. The Council on Environmental Quality requires environmental impact statements for wilderness studies that will result in recommendations for designations (i.e., proposals for legislation to designate as wilderness).

6.2.2.1 Potential Wilderness

A wilderness study may identify lands that are surrounded by or adjacent to lands proposed for wilderness designation but that do not themselves qualify for immediate designation due to temporary nonconforming or incompatible conditions. The wilderness recommendation forwarded to the Congress by the President may identify these lands as "potential" wilderness for future designation as wilderness when the nonconforming use has been removed or eliminated. If so authorized by Congress, these potential wilderness areas will become designated wilderness upon the Secretary's determination, published in the *Federal Register*, that they have finally met the qualifications for designation by the cessation or termination of the nonconforming use.

6.2.2.2 Proposed Wilderness

The findings and conclusions of a formal wilderness study will be reviewed by the Director, who will then determine which lands will be forwarded to the Department of the Interior (Assistant Secretary's Office) as "proposed" wilderness. The Director's proposed wilderness will identify park lands that the Director believes the Secretary should recommend for immediate wilderness designation, as well as any other lands identified as "not proposed" or as "potential" wilderness.

6.2.3 Recommended Wilderness

The Secretary of the Interior is responsible for recommending to the President those lands under his/her jurisdiction that are suitable or nonsuitable for inclusion within the national wilderness preservation system. The Secretary performs this function through the Assistant Secretary's Office by reviewing NPS proposed wilderness and either approving or revising the proposal. The final result is forwarded by the Secretary for the President's consideration. The President is then responsible for transmitting his recommendations with respect to wilderness designation to both houses of Congress. These recommendations must be accompanied by maps and boundary descriptions. The National Park Service will

track the status of the wilderness designation process in Congress.

6.2.4 Designated Wilderness

After the President's wilderness recommendation is formally sent to and considered by Congress, Congress may subsequently enact the legislation needed to include the area within the national wilderness preservation system as "designated" and/or "potential" wilderness. The National Park Service will assist the department and Congress in this process as requested. Lands released by Congress from further wilderness consideration will be managed in accordance with the NPS Organic Act and all other laws, executive orders, regulations, and policies applicable to nonwilderness areas of the national park system.

6.3 Wilderness Resource Management

6.3.1 General Policy

For the purposes of applying these policies, the term "wilderness" will include the categories of eligible, study, proposed, recommended, and designated wilderness. Potential wilderness may be a subset of any of these five categories. The policies apply regardless of category except as otherwise provided herein.

In addition to managing these areas for the preservation of the physical wilderness resources, planning for these areas must ensure that the wilderness character is likewise preserved. This policy will be applied to all planning documents affecting wilderness.

The National Park Service will take no action that would diminish the wilderness eligibility of an area possessing wilderness characteristics until the legislative process of wilderness designation has been completed. Until that time, management decisions will be made in expectation of eventual wilderness designation. This policy also applies to potential wilderness, requiring it to be managed as wilderness to the extent that existing nonconforming conditions allow. The National Park Service will apply the principles of civic engagement and cooperative conservation as it determines the most appropriate means of removing the temporary, nonconforming conditions that preclude wilderness designation from potential wilderness. All management decisions affecting wilderness will further apply the concept of "minimum requirement" for the administration of the area regardless of wilderness category. The only exception is for areas that have been found eligible, but for which, after completion of a wilderness study, the Service has not proposed wilderness designation. However, those lands will still be managed to preserve their eligibility for designation.

(See Minimum Requirement 6.3.5)

6.3.2 Responsibility

NPS responsibility for carrying out wilderness preservation mandates will be shared by the Director, regional directors, and superintendents of parks with eligible, study area, proposed, recommended, and designated wilderness. Interagency cooperation and coordination and training responsibilities will also be carried out at the Washington, D.C., region, and park levels. Specific wilderness management responsibilities will be assigned at each of these administrative levels to carry out these responsibilities effectively and to facilitate efforts for establishing agency and interagency consistency in wilderness management techniques.

WILDERNESS REVIEW AND MANAGEMENT PROCESS

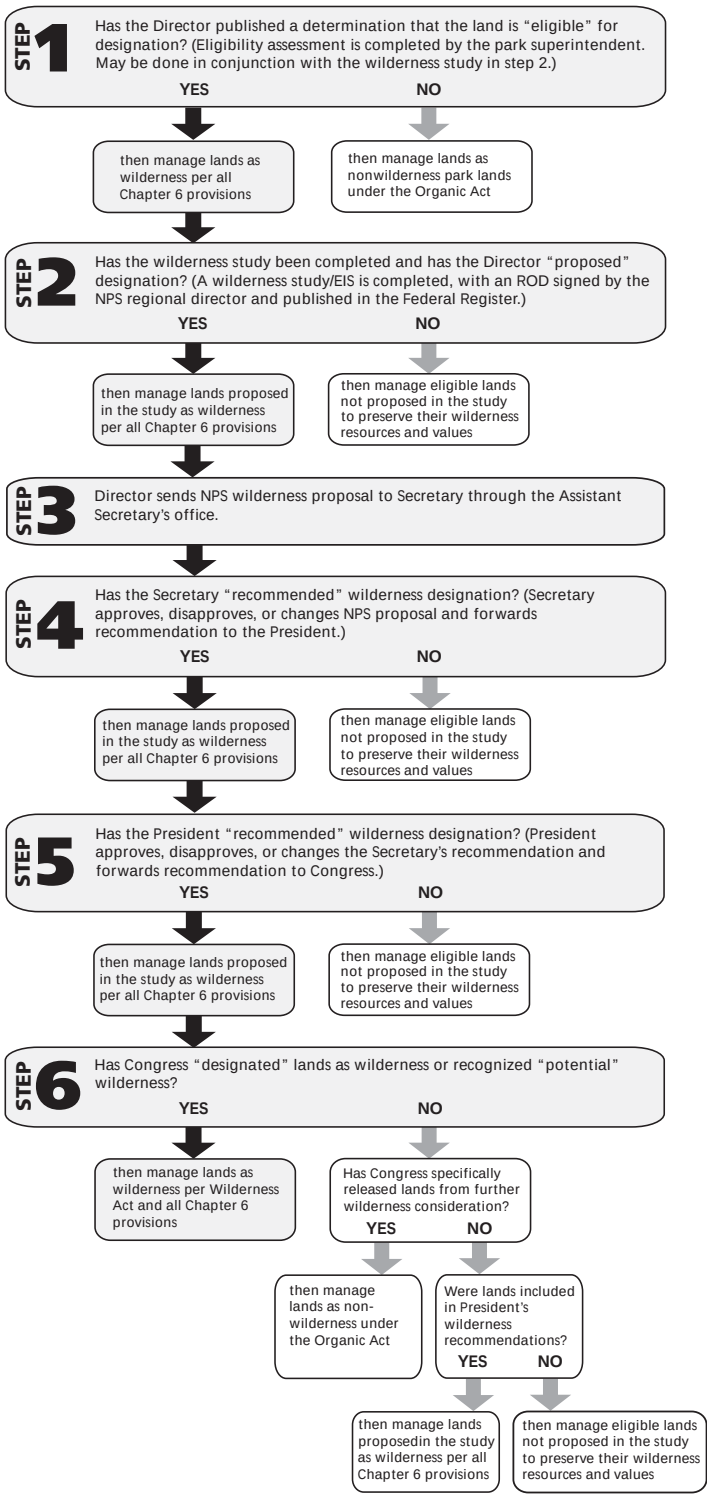

Superintendents will provide the information needed to prepare an annual wilderness report to Congress and to report to the Director on the status of wilderness management in the national park system. Based on this information, the Associate Director for Visitor and Resource Protection will provide the Directorate with recommendations and advice to permanently establish a system of accountability, consistency, and continuity for NPS wilderness management.

6.3.3 Consistency

The National Park Service will seek to achieve consistency in wilderness management objectives, techniques, and practices on both an agency and an interagency basis. Accordingly, the National Park Service will seek to maintain effective intra-agency and interagency communications, and will encourage, sponsor, and participate in intra-agency and interagency training and workshops designed to promote the sharing of ideas, concerns, and techniques related to wilderness management. However, the need for interagency consistency will in no way diminish any established NPS wilderness standards and values.

6.3.4 Wilderness-related Planning and Environmental Compliance

Policies on wilderness planning and compliance include the following.

6.3.4.1 Zoning for Wilderness

When necessary, all categories of wilderness may be zoned for visitor experiences and resource conditions consistent with their wilderness values within the established management zoning system for each park. However, management zoning or other land use classifications cannot and will not diminish or reduce the maximum protection to be afforded lands with wilderness values. Transition zones adjacent to wilderness may be identified to help protect wilderness values, but no transitional or "buffer" zones are appropriate within wilderness boundaries.

6.3.4.2 Wilderness Management Planning

The superintendent of each park containing wilderness resources will develop and maintain a wilderness management plan or equivalent planning document to guide the preservation, management, and use of these resources. The wilderness management plan will identify desired future conditions, as well as establish indicators, standards, conditions, and thresholds beyond which management actions will be taken to reduce human impacts on wilderness resources.

The park's wilderness management plan may be developed as a separate document or as an action component of another planning document. Whether prepared as a stand-alone plan or as part of another planning document, all wilderness management plans must meet the same standards for process and content as specified in this section 6.3.4. Wilderness management plans will be supported by appropriate documentation of compliance with the National Environmental Policy Act and the National Historic Preservation Act. The plan will be developed with public involvement and will contain specific, measurable management objectives that address the preservation and management of natural and cultural resources within wilderness as appropriate to achieve the purposes of the Wilderness Act and other legislative requirements.

(See Visitor Carrying Capacity 8.2.1)

6.3.4.3 Environmental Compliance

Proposals having the potential to impact wilderness resources will be evaluated in accordance with NPS procedures for implementing the National Environmental Policy Act. Those procedures include the use of categorical exclusions, environmental assessments (EAs), or environmental impact statements (EISs). Administrative actions impacting wilderness must be addressed in either the environmental assessment or environmental impact statement accompanying the approved wilderness management plan or as a separate environmental compliance document.

Managers contemplating the use of aircraft or other motorized equipment or mechanical transportation within wilderness must consider impacts to the character, esthetics, and traditions of wilderness before considering the costs and efficiency of the equipment.

In evaluating environmental impacts, the National Park Service will take into account (1) wilderness characteristics and values, including the primeval character and influence of the wilderness; (2) the preservation of natural conditions (including the lack of man-made noise); and (3) assurances that there will be outstanding opportunities for solitude, that the public will be provided with a primitive and unconfined type of recreational experience, and that wilderness will be preserved and used in an unimpaired condition. Managers will be expected to appropriately address cultural resources management considerations in the development and review of environmental compliance documents impacting wilderness resources.

(Also see Director's Order #12: Conservation Planning, Environmental Impact Analysis, and Decision-making)

6.3.5 Minimum Requirement

All management decisions affecting wilderness must be consistent with the minimum requirement concept. This concept is a documented process used to determine if administrative actions, projects, or programs undertaken by the Service or its agents and affecting wilderness character, resources, or the visitor experience are necessary, and if so how to minimize impacts. The minimum requirement concept will be applied as a two-step process that determines

- whether the proposed management action is appropriate or necessary for administration of the area as wilderness and does not cause a significant impact to wilderness resources and character, in accordance with the Wilderness Act; and

- the techniques and types of equipment needed to ensure that impacts on wilderness resources and character are minimized.

In accordance with this policy, superintendents will apply the minimum requirement concept in the context of wilderness stewardship planning, as well as to all other administrative practices, proposed special uses, scientific activities, and equipment use in wilderness. The only exception to the minimum requirement policy is for eligible areas that the Service has not proposed for wilderness designation. However, those lands will still be managed to preserve their eligibility.

When determining minimum requirements, the potential disruption of wilderness character and resources will be considered before, and given significantly more weight than, economic efficiency and convenience. If a compromise of wilderness resources or character is unavoidable, only those actions that preserve wilderness character and/or have localized, short-term adverse impacts will be acceptable.

Although park managers have flexibility in identifying the method used to determine minimum requirement, the method used must clearly weigh the benefits and impacts of the proposal, document the decision-making process, and be supported by an appropriate environmental compliance document. Parks must develop a process to determine minimum requirement until the plan is finally approved. Parks will complete a minimum requirement analysis on those administrative practices and equipment uses that have the potential to impact wilderness resources or values. The minimum requirement concept cannot be used to rationalize permanent roads or inappropriate or unlawful uses in wilderness.

Administrative use of motorized equipment or mechanical transport will be authorized only

- if determined by the superintendent to be the minimum requirement needed by management to achieve the purposes of the area, including the preservation of wilderness character and values, in accordance with the Wilderness Act; or
- in emergency situations (for example, search and rescue, homeland security, law enforcement) involving the health or safety of persons actually within the area.

Such management activities will also be conducted in accordance with all applicable regulations, policies, and guidelines and, where practicable, will be scheduled to avoid creating adverse resource impacts or conflicts with visitor use.

While actions taken to address search and rescue, homeland security and law enforcement issues are subject to the minimum requirement concept, preplanning or programmatic planning should be undertaken whenever possible to facilitate a fast and effective response and reduce paperwork.

For more detailed guidance, see Director's Order #41 and the National Wilderness Steering Committee Guidance Paper #3: "What Constitutes the Minimum Requirements in Wilderness?"

(See Director's Order #12: Conservation Planning, Environmental Impact Analysis, and Decision-making)

6.3.6 Scientific Activities in Wilderness

The statutory purposes of wilderness include scientific activities, and these activities are encouraged and permitted when consistent with the Service's responsibilities to preserve and manage wilderness.

6.3.6.1 General Policy

The National Park Service has a responsibility to support appropriate scientific activities in wilderness and to use science to improve wilderness management. The Service recognizes that wilderness can and should serve as an important resource for long-term research into and study and observation of ecological processes and the impact of humans on these ecosystems. The National Park Service further recognizes that appropriate scientific activities may be critical to the long-term preservation of wilderness.

Scientific activities are to be encouraged in wilderness. Even those scientific activities (including inventory, monitoring, and research) that involve a potential impact to wilderness resources or values (including access, ground disturbance, use of equipment, and animal welfare) should be allowed when the benefits of what can be learned outweigh the impacts on wilderness resources or values. However, all such activities must also be evaluated using the minimum requirement concept and include documented compliance that assesses impacts against benefits to wilderness. This process should ensure that the activity is appropriate and uses the minimum tool required to accomplish project objectives. Scientific activities involving prohibitions identified in section 4(c) of the Wilderness Act (16 USC 1133(c)) may be conducted within wilderness when the following occur:

- The desired information is essential for the understanding health, management, or administration of wilderness, and the project cannot be reasonably modified to eliminate or reduce the nonconforming wilderness use(s); or if it increases scientific knowledge, even when this serves no immediate wilderness management purposes, provided it does not compromise wilderness resources or character. The preservation of wilderness resources and character will be given significantly more weight than economic efficiency and/or convenience.
- Compliance with the National Environmental Policy Act (including completion of documented categorical exclusions, environmental assessments/findings of no significant impact, or environmental impact statements/records of decision) and other regulatory compliance (including compliance with section 106 of the National Historic Preservation Act (16 USC 470f)) are accomplished and documented.

- All scientific activities will be accomplished in accordance with terms and conditions adopted at the time the research permit is approved. Later requests for exceptions to the Wilderness Act will require additional review and approval.
- The project will not significantly interfere with other wilderness purposes (recreational, scenic, educational, conservation, or historical) over a broad area or for a long period of time.
- The minimum requirement concept is applied to implementation of the project.

Research and monitoring devices (e.g., video cameras, data loggers, meteorological stations) may be installed and operated in wilderness if (1) the desired information is essential for the administration and preservation of wilderness and cannot be obtained from a location outside wilderness without significant loss of precision and applicability; and (2) the proposed device is the minimum requirement necessary to accomplish the research objective safely.

Park managers will work with researchers to make NPS wilderness area research a model for the use of low-impact, less intrusive techniques. New technology and techniques will be encouraged if they are less intrusive and cause less impact. The goal will be for studies in NPS wilderness to lead the way in "light on the resource" techniques.

Devices located in wilderness will be removed when determined to be no longer essential. Permanent equipment caches are prohibited within wilderness. Temporary caches must be evaluated using the minimum requirement concept.

All scientific activities, including the installation, servicing, removal, and monitoring of research devices, will apply minimum requirement concepts and be accomplished in compliance with *Management Policies*, director's orders, and procedures specified in the park's wilderness management plan.

(See Studies and Collections 4.2; Social Science Studies 8.11)

6.3.6.2 Monitoring Wilderness Resources

In every park containing wilderness, the conditions and long-term trends of wilderness resources will be monitored to identify the need for or effects of management actions. The purpose of this monitoring will be to ensure that management actions and visitor impacts on wilderness resources and character do not exceed standards and conditions established in an approved park plan.

As appropriate, wilderness monitoring programs may assess physical, biological, and cultural resources and social impacts. Monitoring programs may also need to assess potential problems that may originate outside the wilderness to determine the nature, magnitude, and probable source of those impacts.

6.3.7 Natural Resources Management

The National Park Service recognizes that wilderness is a composite resource with interrelated parts. Without natural resources, especially indigenous and endemic species, a wilderness experience would not be possible. Natural resources are critical, defining elements of the wilderness resource, but they need to be managed within the context of the whole ecosystem. Natural resource management plans will be integrated with and cross-reference wilderness management plans. Pursuing a series of independent component projects in wilderness, such as single-species management, will not necessarily accomplish the overarching goal of wilderness management. Natural resources management in wilderness will include and be guided by a coordinated program of scientific inventory, monitoring, and research.

The principle of nondegradation will be applied to wilderness management, and each wilderness area's condition will be measured and assessed against its own unimpaired standard. Natural processes will be allowed, insofar as possible, to shape and control wilderness ecosystems. Management should seek to sustain the natural distribution, numbers, population composition, and interaction of indigenous species. Management intervention should only be undertaken to the extent necessary to correct past mistakes, the impacts of human use, and influences originating outside of wilderness boundaries.

Management actions, including the restoration of extirpated native species, the alteration of natural fire regimes, the control of invasive alien species, the management of endangered species, and the protection of air and water quality, should be attempted only when the knowledge and tools exist to accomplish clearly articulated goals.

(See Chapter 4: Natural Resource Management. Also see Director's Order #77 series on natural resources management)

6.3.8 Cultural Resources

The Wilderness Act specifies that the designation of any area of the park system as wilderness "shall in no manner lower the standards evolved for the use and preservation of" such unit of the park system under the various laws applicable to that unit (16 USC 1133(a)(3)). Thus, the laws pertaining to historic preservation also remain applicable within wilderness but must generally be administered to preserve the area's wilderness character. The responsible decision-maker will include appropriate consideration of the application of these provisions of the Wilderness Act in analyses and decision-making concerning cultural resources.

Cultural resources that have been included within wilderness will be protected and maintained according to the pertinent laws and policies governing cultural resources using management methods that are consistent with the preservation of wilderness character and values. These laws include the Antiquities Act and the Historic Sites, Buildings and Antiquities Act, as well as subsequent historic

preservation legislation, including the National Historic Preservation Act, the Archaeological Resources Protection Act, and the Native American Graves Protection and Repatriation Act. The *Secretary of the Interior's Standards and Guidelines for Archeology and Historic Preservation* projects provide direction for protection and maintenance. Cemeteries or commemorative features, such as plaques or memorials, that have been included in wilderness may be retained (including approved access to these sites), but no new cemeteries or additions to existing cemeteries may be made unless specifically authorized by federal statute, existing reservations, or retained rights.

(See Chapter 5: Cultural Resource Management)

6.3.9 Fire Management

All fire management activities conducted in wilderness areas will conform to the basic purposes of wilderness. Actions taken to suppress wildfires must use the minimum requirements concept unless the on-site decision-maker determines in his professional judgment that conditions dictate otherwise. Preplanning is critical to ensure that emergency response incorporates minimum requirements to the greatest extent possible. Fire suppression activities should be managed in ways that protect natural and cultural resources and minimize the lasting impacts of the suppression actions. Information on developing a fire management program in wilderness is contained in Director's Order #18: Wildland Fire Management.

Guidance on the need to suppress wildland fire or to use some wildland fires to achieve desired future conditions should appear in the park's planning documents (for example, in the wilderness management plan and fire management plan). Information in these documents will guide managers in the selection of fire management tactics that protect natural and cultural resources from fire and from fire suppression actions.

The park's fire management plan will provide guidance for responses to natural and human-caused wildland fires based on fuel conditions, climatic conditions, resources at risk, potential for damage to property or loss of life, both within and adjacent to the wilderness, as well as the availability of fire suppression resources.

If a wildland fire use program is implemented, planning documents will also include the prescriptions and procedures under which the program will be conducted within wilderness.

(See Fire Management 4.5)

6.3.10 Management Facilities

Part of the definition of wilderness as provided by the Wilderness Act is "undeveloped federal land retaining its primeval character and influence, without permanent improvements." Accordingly, authorizations of NPS administrative facilities in wilderness will be limited to the types and minimum number essential to meet the minimum requirements for the administration of the wilderness area. A decision to construct, maintain, or remove an administrative facility will be based primarily on whether or not the facility is required to preserve wilderness character or values, not on considerations of administrative convenience, economic effect, or convenience to the public or park staff. Maintenance or the removal of historic structures will also comply with cultural resource protection and preservation policies and directives, and with the concept of minimum requirement management techniques for wilderness.

6.3.10.1 Administrative Facilities

Administrative facilities (for example, ranger stations and/or patrol cabins, fire lookouts, radio and/or cellular telephone antennas, radio repeater sites, associated storage or support structures, drift fences, and facilities supporting trail stock operations) may be allowed in wilderness only if they are determined to be the minimum requirement necessary to carry out wilderness management objectives and are specifically addressed within the park's wilderness management plan or other appropriate planning documents. New roads will not be built in wilderness. Temporary vehicular access may be permitted only to meet the minimum requirements of emergency situations. As rapidly as possible, disturbed resources will be restored according to an approved restoration plan. Where abandoned roads have been included within wilderness, they may be used as trails, restored to natural conditions, or managed as a cultural resource.

No permanent heliports, helipads, or airstrips will be allowed in wilderness unless specifically authorized by statute or legislation. Temporary landing facilities may be used to meet the minimum requirements of emergency situations. Site improvements determined to be essential for safety reasons during individual emergency situations may be authorized, but no site markings or improvements of any kind may be installed to support nonemergency use. In Alaska, any prohibitions or restrictions on the use of fixed-wing aircraft should follow the procedures in 43 CFR 36.11(f).

Permanent storage caches are prohibited in wilderness unless necessary for health and safety purposes or when such caches are determined necessary, justified, documented, and approved through a minimum requirements analysis.

(See Overflights and Aviation Uses 8.4)

6.3.10.2 Trails in Wilderness

Trails will be permitted within wilderness when they are determined to be necessary for resource protection and/or for providing for visitor use for the purposes of wilderness. The identification and inventory of the wilderness trail system will be included as an integral part of the wilderness management plan or other appropriate planning document.

Trails will be maintained at levels and conditions identified within the approved wilderness management plan or other planning document. Trail maintenance structures (such as water bars, gabions) may be provided, under minimum requirement protocols, where they are essential for resource preservation or where significant safety hazards exist during normal use periods. Historic and/or prehistoric trails will be administered in keeping with approved cultural resource and wilderness management plan requirements.

Borrow pits are not permitted in wilderness areas, with the exception of small-quantity use of borrow material for trails, which must be in accordance with an approved minimum requirements analysis.

6.3.10.3 Shelters and Campsites

The construction of new shelters for public use will generally not be allowed, in keeping with the values and character of wilderness. An existing shelter may be maintained or reconstructed only if the facility is necessary to achieve specific wilderness management objectives as identified in the park's wilderness and cultural resources management plans. The construction, use, and occupancy of cabins and other structures in wilderness areas in Alaska are governed by applicable provisions of the Alaska National Interest Lands Conservation Act and by NPS regulations in 36 CFR Part 13; such structures may be permitted only under conditions prescribed in the park's wilderness management plan.

Although the development of facilities to serve visitors will generally be avoided, campsites may be designated when essential for resource protection and preservation or to meet other specific wilderness management objectives. In keeping with the terms of the park's wilderness management plan, campsite facilities may include a site marker, fire rings, tent sites, food storage devices, and toilets if these are determined by the superintendent to be the minimum facilities necessary for the health and safety of wilderness users or for the preservation of wilderness resources and values. Toilets will be placed only in locations where their presence and use will resolve health and sanitation problems or prevent serious resource impacts, especially where reducing or dispersing visitor use is impractical or has failed to alleviate the problems. Picnic tables will not be allowed in wilderness except in those limited circumstances when they are necessary for resource protection and when documented and approved through a minimum requirements analysis.

6.3.10.4 Signs

Signs detract from the wilderness character of an area and make the imprint of man and management more noticeable. Only those signs necessary for visitor safety or to protect wilderness resources, such as those identifying routes and distances, will be permitted. Where signs are used, they should be compatible with their surroundings and the minimum size possible.

6.3.11 Wilderness Boundaries

Policies related to wilderness boundaries include the following.

6.3.11.1 Legal Descriptions and Boundary Maps

Every park with designated wilderness will possess a written legal description of the wilderness area and a map (or maps) that illustrates the legal description of the wilderness. Each park will ensure that the legal description and map(s) are filed in the appropriate locations. Wilderness boundaries have the force of federal law and may only be modified through the legislative process—unless minor adjustments and corrections are specifically authorized within the wilderness designation enabling legislation.

6.3.11.2 Caves

All cave passages located totally within the surface wilderness boundary will be managed as wilderness. Caves that have entrances within wilderness but contain passages that may extend outside the surface wilderness boundary will be managed as wilderness. Caves that may have multiple entrances located both within and exterior to the surface wilderness boundary will be managed consistent with the surface boundary; those portions of the cave within the wilderness boundary will be managed as wilderness.

(See Caves 4.8.2.2)

6.3.11.3 Waters in Wilderness

In keeping with established jurisdictions and authorities, the Service will manage as wilderness all waters included within wilderness boundaries, and the lands beneath these waters (if owned by the United States).

(See Water Resource Management 4.6)

6.3.12 American Indian Access and Associated Sites

American Indian access rights and protection of sites associated with Indian tribes will be protected and maintained according to applicable laws and policies. The American Indian Religious Freedom Act reaffirms the First Amendment rights of Native Americans to access national park system lands for the exercise of their traditional religious practices. Native American human remains that were removed from wilderness areas and are subject to the NAGPRA repatriation may be reinterred at or near the site from which they were removed. American Indian religious areas and other ethnographic and cultural resources will be inventoried and protected. American Indians will be permitted access within wilderness for sacred or religious purposes consistent with the intent of the American Indian Religious Freedom Act, the Wilderness Act, and other applicable authorities provided by federal statues and executive orders.

(See also Executive Order 13007 (Indian Sacred Sites))

The National Park Service will encourage and facilitate those uses of wilderness that are in keeping with the definitions and purposes of wilderness and do not degrade wilderness resources and character. Appropriate restrictions may be imposed on any authorized activity in the interest of preserving wilderness character and resources or to ensure public safety.

When resource impacts or demands for use exceed established thresholds or capacities, superintendents may limit or redirect use. If these actions are determined to be the minimally required level of management, physical alterations, public education, general regulations, special regulations, permit systems, and the local restrictions, public use limits, closures, and designations implemented under the discretionary authority of the superintendent (36 CFR 1.5 and Part 13; 43 CFR Part 36 for Alaska units) may all be used in managing use and protecting wilderness.

6.4.1 General Policy

Park visitors need to accept wilderness on its own unique terms. Accordingly, the National Park Service will promote education programs that encourage wilderness users to understand and be aware of certain risks, including possible dangers arising from wildlife, weather conditions, physical features, and other natural phenomena that are inherent in the various conditions that comprise a wilderness experience and primitive methods of travel. The National Park Service will not modify the wilderness area to eliminate risks that are normally associated with wilderness, but it will strive to provide users with general information concerning possible risks, any recommended precautions, related user responsibilities, and applicable restrictions and regulations, including those associated with ethnographic and cultural resources.

6.4.2 Wilderness Interpretation and Education

In the context of interpretive and educational planning, national park system units with wilderness resources will (1) operate public education programs designed to promote and perpetuate public awareness of and appreciation for wilderness character, resources, and ethics while providing for acceptable use limits; (2) focus on fostering an understanding of the concept of wilderness that includes respect for the resource, willingness to exercise self-restraint in demanding access to it, and an ability to adhere to appropriate, minimum-impact techniques; and (3) encourage the public to use and accept wilderness on its own terms—that is, the acceptance of an undeveloped, primitive environment and the assumption of the potential risks and responsibilities involved in using and enjoying wilderness areas. NPS interpretive plans and programs for wilderness parks will address the primary interpretive themes for wilderness. Education is among the most effective tools for dealing with wilderness use and management problems and should generally be applied before more restrictive management tools.

(See Visitor Safety 8.2.5.1)

6.4.3 Recreational Use Management in Wilderness

Recreational uses of NPS wilderness are generally those traditionally associated with wilderness and identified by Congress in the legislative record for the development of the Wilderness Act and in keeping with the language provided by sections 2(a) and 2(c) of the act itself (16 USC 1131(a) and (c)). These recreational uses of wilderness will be of a type and nature that ensures that its use and enjoyment (1) will leave it unimpaired for future use and enjoyment as wilderness, (2) provides for the protection of the area as wilderness, and (3) provides for the preservation of wilderness character. Recreational uses in NPS wilderness areas will be of a nature that

- enables the areas to retain their primeval character and influence;
- protects and preserves natural conditions;
- leaves the imprint of man's work substantially unnoticeable;
- provides outstanding opportunities for solitude or primitive and unconfined types of recreation; and
- preserves wilderness in an unimpaired condition.

(See Management of Recreational Use 8.2.2.1)

6.4.3.1 Recreation Use Evaluation

Recreational uses—particularly new and emerging activities that compromise the stated purposes and definitions of wilderness or unduly impact the wilderness resource or the visitor experience within wilderness—will be evaluated to determine if these uses are appropriate or should be limited or disallowed through use of the superintendent's compendium in 36 CFR 1.5. Evaluation or reevaluation should be accomplished within wilderness management plans or similar implementation plans. Recreational uses that do not meet the purposes and definitions of wilderness should be prohibited in NPS wilderness.

Significant changes in patterns or increased levels of use will not be authorized by special permit, administrative discretion, or authorities under the superintendents' compendia, except in cases where sufficient information exists to adequately determine there is no significant impact on wilderness resources and values, including visitor experiences. These increased levels of use and changes in patterns of existing use will normally not qualify for a categorical exclusion under the National Environmental Policy Act. Decisions regarding significant changes in patterns and new levels of use will require environmental analysis and review, including opportunity for public comment, in accordance with the NEPA requirements.

(See Appropriate Use of the Parks 1.5; Visitor Carrying Capacity 8.2.1)

6.4.3.2 Outdoor Skills and Ethics

Leave-no-trace principles and practices will be applied to all forms of recreation management within wilderness, including commercial operations. Wilderness users will generally be required to carry out all refuse. Refuse is defined in 36 CFR 1.4.

6.4.3.3 Use of Motorized Equipment

Public use of motorized equipment or any form of mechanical transport will be prohibited in wilderness except as provided for in specific legislation. Operating a motor vehicle or possessing a bicycle in designated wilderness outside Alaska is prohibited (see NPS regulations in 36 CFR 4.30(d)(1)).

However, section 4(d)(1) of the Wilderness Act (16 USC 1133(d)(1)) authorizes the Secretary—where legislation designating the wilderness specifically makes this provision applicable—to allow the continuation of motorboat and aircraft use under certain circumstances in which those activities were established prior to wilderness designation. Section 4(d)(1) gives the Secretary the discretion to manage and regulate the activity in accordance with the Wilderness Act, the NPS Organic Act, and individual park enabling legislation. As authorized, the National Park Service will administer this use to be compatible with the purpose, character, and resource values of the particular wilderness area involved. The use of motorized equipment by the public in wilderness areas in Alaska is governed by applicable provisions of the Alaska National Interest Lands Conservation Act, NPS regulations in 36 CFR Part 13, and Department of the Interior regulations in 43 CFR Part 36. The specific conditions under which motorized equipment may be used by the public will be outlined in each park's wilderness management plan.

(See Soundscape Management 4.9; Use of Motorized Equipment 8.2.3)

6.4.4 Commercial Services

Wilderness-oriented commercial services that contribute to public education and visitor enjoyment of wilderness values or provide opportunities for primitive and unconfined types of recreation may be authorized if they meet the "necessary and appropriate" tests of the National Park Service Concessions Management Improvement Act of 1998 and section 4(d)(6) of the Wilderness Act (16 USC 1133(d)(5)), and if they are consistent with the wilderness management objectives contained in the park's wilderness management plan, including the application of the minimum requirement concept. Activities such as guide services for outfitted horseback, hiking, mountain climbing, or river trips and similar activities may be appropriate and may be authorized if conducted under the terms and conditions outlined in the park's wilderness management plan and/or in legislation authorizing these types of commercial uses.

The only structures or facilities used by commercial services that will be allowed in wilderness will be temporary shelters, such as tents, or other specifically approved facilities that may be required within the wilderness management plan for resource protection and the preservation of wilderness values. Temporary facilities will generally be removed from the wilderness after each trip, unless such removal will cause degradation of the wilderness resources. In Alaska, additional guidance for the management of temporary facilities for hunting and fishing guides is found in the Alaska National Interest Lands Conservation Act section 1316 (16 USC 3204). The use of permanent equipment and supply caches by commercial operators is prohibited within wilderness.

Managers will ensure that commercial operators are in compliance with established leave-no-trace protocols.

(See Visitor Use 8.2; Commercial Use Authorizations 10.3)

6.4.5 Special Events

The National Park Service will not sponsor or issue permits for special events to be conducted in wilderness if those events are inconsistent with wilderness resources and character or if they do not require a wilderness setting to occur. Permits will not be issued in NPS wilderness areas for commercial enterprises or competitive events, including activities involving animal, foot, or watercraft races; the physical endurance of a person or animal; organized survival exercises; war games; or similar exercises.

(See Special Events 8.6.2. Also see 36 CFR 2.50)

6.4.6 Existing Private Rights

Wilderness designation does not extinguish valid existing private rights (for example, fee-simple interest, less-than-fee-simple interest, valid mineral operations, rights-of-way, grazing permits). The validity of private rights within wilderness must be determined on a case-by-case basis. Valid private rights in wilderness must be administered in keeping with the specific conditions and requirements of the valid right.

6.4.7 Grazing and Livestock Driveways

Commercial grazing or driving of livestock in park wilderness will be allowed only as specifically authorized by Congress. Where these activities are authorized, they will be managed under conditions and requirements identified within the approved wilderness management plan and corresponding allotment management plans. The use of motorized vehicles, motorized equipment, or mechanical transport by grazing permittees will not be allowed except as provided for by a specific authority—that is, a valid existing right, the enabling legislation, or an NPS determination of minimum requirement. The construction of livestock management facilities other than those specifically authorized by legislation is prohibited.

Noncommercial grazing of trail stock used as part of an approved livestock management program within wilderness may be authorized in accordance with NPS regulations and conditions outlined in the wilderness management plan or stock use management plan. All approved livestock

use must ensure the preservation of wilderness resources and character. Superintendents will be responsible for monitoring livestock use in wilderness to the same degree as human use, and may use the same management tools and techniques, including the application of the minimum requirement concept to manage livestock use that are available for managing other wilderness uses.

(See 8.6.8 Domestic and Feral Livestock)

6.4.8 Rights-of-Way

Existing rights-of-way that have been included in wilderness should be terminated or phased out where practicable. Rights-of-way subject to NPS administrative control should be administered under conditions outlined in the park's wilderness management plan that protect wilderness character and resources and limit the use of motorized or mechanical equipment. The Service will not issue any new rights-of-way or widen or extend any existing rights-of-way in wilderness. Rights-of-way and access procedures affecting wilderness areas in Alaska are governed by applicable provisions of the Alaska National Interest Lands Conservation Act and regulations in 43 CFR Part 36, and 36 CFR Part 13.

(See Existing Private Rights 6.4.6)

6.4.9 Mineral Development

The National Park Service will seek to remove or extinguish valid mining claims and nonfederal mineral interests in wilderness through authorized processes, including purchasing valid rights. In parks where Congress has authorized the leasing of federal minerals, the Park Service will take appropriate actions to preclude the leasing of lands or minerals within wilderness whenever and wherever it is authorized to do so. Lands included within wilderness will be listed as "excepted areas" under applicable regulations in 43 CFR Parts 3100 and 3500 (see section 3500.8).

Unless and until mineral interests and mining claims within NPS wilderness are eliminated, they must be managed pursuant to existing NPS regulations, policies, and procedures. (See 36 CFR Part 9, Subpart A, for mineral development on mining claims; 36 CFR Part 9, subpart B, for nonfederal oil and gas development; and 43 CFR Parts 3100 and 3500 for federal mineral leasing.). A validity examination of unpatented claims in wilderness affected by a proposed plan of operations must be conducted by a certified mineral examiner before plan approval. Motorized use in wilderness is allowed only with an approved plan of operations on valid mineral claims and where there is no reasonable alternative. Motorized use for access can occur only on existing or approved roads. There will be no new roads or improvement of existing roads unless documented as being necessary for resource protection. Any plan of operations that is approved will include stipulations on operations and reclamation that will ensure that long-term effects on the wilderness area are substantially unnoticeable. For access to mining claims in NPS wilderness in Alaska, see 43 CFR 36.10.

6.4.10 Accessibility for Persons with Disabilities

The National Park Service has legal obligations to make available equal opportunities for people with disabilities in all programs and activities. This requirement includes the opportunity to participate in wilderness experiences. Management decisions responding to requests for special consideration to provide wilderness use by persons with disabilities must be in accord with the Architectural Barriers Act of 1968, the Rehabilitation Act of 1973 (as amended in 1978), and section 507(c) of the Americans with Disabilities Act of 1990 (42 USC 12207(c)). Such decisions should balance the intent of access and wilderness laws and find a way of providing the highest level of protection to the wilderness resource.

Section 17.550 of the Secretary of the Interior's regulations regarding the enforcement of nondiscrimination on the basis of disability in Department of Interior programs (43 CFR Part 17, subpart E) states that agencies are not required to take any actions or provide access that would result in a fundamental alteration in the nature of a program or activity. However, the agency has the burden of proving that compliance would result in a fundamental alteration. This concept is also found in section 507 of the Americans with Disabilities Act.

(See Accessibility for Persons with Disabilities 1.9.3, 8.2.4, and 9.1.2. Also see Director's Order #42: Accessibility for Visitors with Disabilities in National Park Service Programs and Services)

Congressional Research Service

Wilderness Laws: Statutory Provisions and Prohibited and Permitted Uses

Ross W. Gorte
Specialist in Natural Resources Policy

February 22, 2011

Congressional Research Service
7-5700
www.crs.gov
R41649

CRS Report for Congress
Prepared for Members and Committees of Congress

Summary

The 1964 Wilderness Act established a National Wilderness Preservation System of federal lands "where the earth and its community of life are untrammeled by man, where man himself is a visitor who does not remain." The act designated 54 wilderness areas with 9.1 million acres within the national forests and reserved to Congress the authority to add areas to the system. Congress has enacted 117 subsequent statutes designating wilderness areas (including one with 16 wilderness-related subtitles) and 8 other statutes requiring wilderness study or otherwise significantly affecting wilderness areas. Many of these statutes provide management direction for designated areas that differs from the Wilderness Act provisions. As of December 31, 2010, the system totaled 759 wilderness areas with 109.7 million acres of federal land.

The Wilderness Act and other wilderness statutes have contained many provisions related to the administration of the areas. All but three direct *management in accordance with the Wilderness Act*. Provisions prohibiting *buffer zones* around designated areas are common. Many also preserve existing *state jurisdiction and responsibilities over fish and wildlife*, while some preserve *other jurisdictions and authorities*, such as for law enforcement and cooperation with other federal, state, and local agencies. *Water rights* has been a controversial issue—some statutes have neither claimed nor denied water rights, some have reserved water rights, and others have directed no claim to water. Several statutes have directed *wilderness study* of potentially qualified lands, and have designated *intended or potential wilderness*, contingent upon some future condition or event. Concern about protection of the study areas has led Congress to include provisions addressing *interim management and release* of areas during and after the studies.

The Wilderness Act generally prohibits commercial activities within wilderness areas, although it allows commercial activities related to wilderness-type recreation. The act also generally prohibits motorized and mechanical access, and roads, structures, and other facilities within wilderness areas. Although wilderness is generally open to other public uses, some wilderness statutes have authorized temporary closures for various reasons. Also, many statutes have withdrawn the designated areas from the public land disposal laws, the mining and mineral leasing laws, and from the laws authorizing the disposal of common mineral materials. However, valid existing rights are not terminated, and can be developed under reasonable regulations.

The Wilderness Act and many subsequent wilderness statutes have also allowed various nonconforming uses and conditions. Motorized access has generally been permitted for *management requirements and emergencies*, for *nonfederal inholdings*, and for *fire, insect, and disease control*. *Continued motorized access* and *livestock grazing* have also generally been permitted where they had been occurring prior to the area's designation as wilderness. Construction, operations, and maintenance, and associated motorized access, have also been permitted for *water infrastructure* and for *other infrastructure* in many instances. Motorized access for state agencies for *fish and wildlife management activities* has sometimes been explicitly allowed. *Low-level military overflights* of wilderness areas have been permitted in several statutes. Access for *minerals activities* has been authorized in some specific areas and for valid existing rights; the Wilderness Act specifically allowed for mineral prospecting and for establishing mineral rights for 20 years after enactment. Finally, several statutes have allowed access for *other specific activities*, such as access to cemeteries within designated areas or for tribal activities.

Contents

Statutory Provisions 1
- Manage in Accordance With the Wilderness Act 2
- Buffer Zones 2
- State Fish and Wildlife Jurisdiction and Responsibilities 2
- Jurisdiction and Authorities of Other Agencies 3
- Land and Rights Acquisition 3
- Water Rights 4
  - State Authorities and Water Agreements 4
  - Neither Claim Nor Denial of Claim 4
  - Reserved Water Rights 5
  - No Claim on Water 5
- Wilderness Study and Release 5
  - Intended or Potential Wilderness 5
  - Wilderness Study and Review 6
  - Management During and After a Wilderness Review 7

Prohibited Uses 8
- Area Closures to Public Access 8
- Withdrawal from Public Land, Mining, and Mineral Leasing Laws 9
  - Public Land Laws 9
  - Mining and Mineral Leasing Laws 9
  - Mineral Materials 10

Nonconforming Permitted Uses 10
- Access for Management Requirements and Emergencies 10
- Access to Nonfederal Inholdings 11
- Fire, Insect, and Disease Control 11
- Continued Motorized Uses 11
- Livestock Grazing 12
- Access for Water Infrastructure 12
- Access for Other Infrastructure 13
- Access for Fish and Wildlife Management Activities 13
- Low-Level Military Overflights 14
- Access for Minerals Activities 14
- Access for Other Specific Activities 15

Appendixes

Appendix A. List of Wilderness Statutes Containing the Various Statutory Provisions and Guidelines on Prohibited and Permitted Uses 16

Appendix B. Individual Statutes 23

Contacts

Author Contact Information 83

Congress enacted the Wilderness Act (P.L. 88-577; 16 U.S.C. §§ 1131-1136) in 1964. It established a National Wilderness Preservation System of federal lands "where the earth and its community of life are untrammeled by man, where man himself is a visitor who does not remain." The act designated 54 wilderness areas containing 9.1 million acres of federal land within the national forests. It also reserved to Congress the authority to add areas to the system, although it also directed agencies to review the wilderness potential of certain lands.

The Wilderness Act and the 132 subsequent laws[1] designating wilderness contain numerous statutory provisions addressing management of wilderness areas as well as many provisions addressing prohibited and permitted uses, both generally and in specific areas.[2] This report summarizes the various statutory provisions and the provisions on prohibited and permitted uses within wilderness areas. **Appendix A** is a list of provisions in each relevant law discussed in the sections below. **Appendix B** includes a complete chronological list of laws designating wilderness areas, with a summary of or quotation from all the wilderness-related provisions in each law.[3] As of December 31, 2010, the National Wilderness Preservation System totaled 759 areas, with 109.7 million acres.[4] The wilderness areas are part of and within the existing units of federal land administered by the several federal land management agencies—the Forest Service (USFS) in the Department of Agriculture, and the National Park Service (NPS), Fish and Wildlife Service (FWS), and Bureau of Land Management (BLM) within the Department of the Interior.

The subsequent wilderness statutes have not designated wilderness areas by amending the Wilderness Act. Instead, they are independent statutes. While nearly all direct management in accordance with the Wilderness Act, as discussed below, most also provide unique management guidance for the areas designated in that statute. Thus, altering management direction for the entire National Wilderness Preservation System, for example to modify land acquisition authority, might require amending all the wilderness statutes, not just the Wilderness Act.

Statutory Provisions

The Wilderness Act and subsequent wilderness laws contain several provisions addressing management of wilderness areas. These laws designate wilderness areas as part of and within existing units of federal land, and the management provisions applicable to those units of federal land, particularly those governing management direction and restricting activities, also apply. For example, hunting is prohibited in many NPS units, but not on USFS or BLM lands, and thus would be prohibited in wilderness areas in those NPS units but generally not in USFS or BLM wilderness areas, absent specific language.

[1] There are actually only 117 subsequent laws with wilderness designations, but the Omnibus Public Land Management Act of 2009 (P.L. 111-11) has 16 separate subtitles designating wilderness areas, most of which had been separately introduced wilderness bills and most of which have distinct management provisions. Thus, this statute is counted as 16 separate "wilderness laws" for discussing the frequency of the various statutory provisions.

[2] Congress has also established numerous other designations, including various National Park System units (e.g., national preserves and national seashores) and special management areas within areas managed by the USFS and the BLM (e.g., national recreation areas). For details on such USFS areas, see CRS Report R41285, *Congressionally Designated Special Management Areas in the National Forest System*, by Ross W. Gorte.

[3] **Appendix B** includes a few additional substantive bills that do not designate wilderness areas, such as wilderness study bills and wilderness area management legislation, and excludes statutes with only minor boundary adjustments.

[4] See CRS Report RL31447, *Wilderness: Overview and Statistics*, by Ross W. Gorte.

Manage in Accordance With the Wilderness Act

The Wilderness Act identified the purposes of wilderness in § 2. Specifically, § 2(a) stated that the purpose was to create a National Wilderness Preservation System of federal lands

> administered for the use and enjoyment of the American people in such manner as will leave them unimpaired for future use and enjoyment as wilderness, and so as to provide for the protection of these areas, the preservation of their wilderness character, and for the gathering and dissemination of information regarding their use and enjoyment as wilderness…

The act goes on to further define wilderness area management in § 2(c):

> A wilderness, in contrast to those areas where man and his own works dominate the landscape, is hereby recognized as an area where the earth and its community of life are untrammeled by man, where man himself is a visitor who does not remain. An area of wilderness is further defined to mean in this Act an area of undeveloped Federal land retaining its primeval character and influence, without permanent improvements or human habitation, which is protected and managed so as to preserve its natural conditions and which (1) generally appears to have been affected primarily by the forces of nature, with the imprint of man's work substantially unnoticeable; (2) has outstanding opportunities for solitude or a primitive and unconfined type of recreation; (3) has at least five thousand acres of land or is of sufficient size as to make practicable its preservation and use in an unimpaired condition; and (4) may also contain ecological, geological, or other features of scientific, educational, scenic, or historical value.

All but three of the subsequent wilderness statutes—P.L. 90-532, P.L. 90-544, and P.L. 92-476—direct management of the designated areas in accordance with or consistent with the Wilderness Act. Thus, virtually all areas within the National Wilderness Preservation System must be managed under the purposes described above and under the various management directions included in the Wilderness Act, as described below. In addition, four statutes require management plans for the designated wilderness areas. For all other designated areas, management must be included in management plans for the unit or area which encompasses the designated wilderness.

Buffer Zones

The Wilderness Act is silent on the issue of buffer zones around wilderness areas to protect the designated areas. However, language in subsequent wilderness bills has prohibited buffer zones restricting uses and activities on federal lands around the wilderness areas. The first explicit language was enacted in 1980 in P.L. 96-550; § 105 states:

> Congress does not intend that the designation of wilderness areas … lead to the creation of protective perimeters or buffer zones around each wilderness area. The fact that nonwilderness activities or uses can be seen or heard from areas within the wilderness shall not, of itself, preclude such activities or uses up to the boundary of the wilderness area.

Virtually identical language has been included in 30 other wilderness statutes enacted since 1980.

State Fish and Wildlife Jurisdiction and Responsibilities

The Wilderness Act explicitly directed that the wilderness designations had no effect on state jurisdiction or responsibilities over fish and wildlife; § 4(d)(8) states that "nothing in this Act shall be construed as affecting the jurisdiction or responsibilities of the several States with respect

to wildlife and fish in the national forests."[5] Comparable language, sometimes only referring to state jurisdiction (not responsibilities), has been included in 31 wilderness statutes, beginning in 1978. Such provisions seem to be more common in recent legislation; for example, 8 of the 16 wilderness subtitles of P.L. 111-11 and five of the six wilderness statutes enacted in the 109th Congress included such language. Concern over state wildlife and fish management in wilderness areas persists, and several statutes have included additional specific provisions over permissible access and activities for fish and wildlife management; these are discussed under "Nonconforming Permitted Uses," below.

Jurisdiction and Authorities of Other Agencies

Several wilderness statutes have directed that other agencies' specific authorities, jurisdiction, and related activities be allowed to continue. Three—P.L. 101-628 (AZ), P.L. 103-433 (CA), and P.L. 106-145 (CA)—directed no effect on U.S.-Mexico border operations. P.L. 103-433 added no effect on law enforcement generally, and allowed motorized access for law enforcement and border operations. P.L. 106-145 added no effect on drug interdiction, and allowed motorized access subject to conditions established by the Secretary. Two other laws—P.L. 106-65 (AZ) and P.L. 111-11, Subtitle K (NM)—directed no effect on military training, for current and future aviation training and for an adjacent training center respectively. In addition, P.L. 95-495 directed cooperation with the State of Minnesota generally, while P.L. 98-550 directed cooperation with the State of Wyoming on cultural resource management. P.L. 107-282 directed no effect on Park Service management of the Lake Mead National Recreation Area. Finally, P.L. 111-11, Subtitle L, directed no effect on management of existing utilities outside the designated wilderness areas.

Land and Rights Acquisition

The Wilderness Act authorizes the acquisition of land within designated wilderness areas (called inholdings). Section 5(c) authorizes acquisition, subject to appropriations, "if (1) the owner concurs in such acquisition or (2) the acquisition is specifically authorized by Congress." In addition, § 5(a) authorizes acquisition of inholdings by exchange for other federal land of approximately equal value, but the exchange can grant mineral interests only if the landowner relinquishes mineral interests in the inholding. Section 6(a) authorizes the acceptance of gifts or bequests of land within or adjacent to the wilderness, and after 60 days notice to Congress shall become part of the designated wilderness.

Several subsequent wilderness statutes have provided specific directions on acquisitions within the areas designated in those statutes.[6] P.L. 93-622, the Eastern Wilderness Act, authorized acquisition through condemnation, as well as by purchase, gift, or exchange. P.L. 97-466 (WV) directed the acquisition of coal and other mineral interests, with detailed provisions on the valuation procedures and the use of credits for other federal mineral rights elsewhere; P.L. 104-333 authorized the acquisition of mineral leases by exchange. P.L. 98-425 (CA) directed

[5] The Wilderness Act only designated wilderness areas within USFS lands, and thus directed management activities for the national forests by the Secretary of Agriculture. When Congress began designating wilderness within DOI agency lands in 1968, the common management directions were extended to DOI lands by the Secretary of the Interior.

[6] Many of the statutes have included provisions directing specific land exchanges, but these might or might not have involved lands within the designated wilderness areas. The only provisions discussed here are those that clearly involve lands within wilderness areas.

negotiations for acquisition via an exchange, and P.L. 98-574 (TX) directed an expeditious land exchange with a forest products company. P.L. 100-184 (MI) explicitly required concurrence of the landowner for land acquisition. P.L. 101-628 (AZ) directed the acquisition of mineral rights by exchange, and P.L. 103-77 (CO) directed mineral right acquisition only by exchange or donation.

Water Rights

In contrast to the preceding statutory provisions, where Congress has been relatively consistent in the language used or has been silent on the particular issue, wilderness statutes have provided different directions concerning federal reserved water rights associated with the designated wilderness areas. Under the *Winters* doctrine, when Congress reserves federal land for a particular purpose, it also reserves enough water to fulfill the purpose of the reservation.[7] Congress also has repeatedly deferred to state law in the regulation of water allocation and use.[8]

State Authorities and Water Agreements

Numerous wilderness statutes direct that they are to have no effect on various water agreements and state jurisdiction over water rights. The first was P.L. 95-495, the Boundary Waters Canoe Area Wilderness Act, which directed no effect on Minnesota's jurisdiction or responsibilities over water rights and management. P.L. 96-550 directed no effect on management of a particular municipal watershed. Five statutes—P.L. 107-282 (NV), P.L. 108-424 (NV), P.L. 109-94 (CA), P.L. 109-432 (NV), and P.L. 111-11, Subtitle O (UT)—direct no effect on state water jurisdiction. These five statutes, plus P.L. 103-77 (CO) and P.L. 106-353 (CO), also direct that the statutes are not to be "construed as limiting, altering, modifying, or amending any interstate compacts or equitable apportionment decrees that apportion water among and between" the states. In addition, these five statutes, plus P.L. 111-11, Title II, Subtitle E (NM), direct that any water rights be secured under state law. Two statutes—P.L. 101-628 (AZ) and P.L. 104-433 (CA)—direct no effect on state, interstate, federal, or international jurisdiction, agreements, or treaties pertaining to the Colorado River. Finally, P.L. 108-447 (WI) directs the preservation of existing treaty rights and management of Lake Superior waters.

Neither Claim Nor Denial of Claim

The Wilderness Act, in § 4(d)(7), states that "nothing in this Act shall constitute an express or implied claim or denial on the part of the Federal Government as to exemption from State water laws." Comparable language—neither claiming nor denying reserved water rights for the wilderness designations outside of the state legal system for allocating water—has been used in five subsequent wilderness statutes—P.L. 96-312 (ID), P.L. 98-406 (AZ), P.L. 98-428 (UT), P.L. 98-550 (WY), and P.L. 106-399 (OR).

[7] *Winters v. United States*, 207 U.S. 564 (1908). See also CRS Report R41081, *The Wild and Scenic Rivers Act (WSRA): Protections, Federal Water Rights, and Development Restrictions*, by Cynthia Brougher for a discussion of federal reserved water rights in similarly protective legislation.

[8] See, for example, *United States v. New Mexico*, 438 U.S. 696, n.5 at 702 (1978).

Reserved Water Rights

In contrast to the Wilderness Act, several subsequent wilderness statutes have expressly reserved federal water rights associated with the designated wilderness areas. Statutes with such an express reservation include P.L. 100-668 (WA), P.L. 101-195 (NV), P.L. 101-628 (AZ), P.L. 102-301 (CA), P.L. 103-433 (CA), and P.L. 107-370 (CA). Another four wilderness statutes (P.L. 107-282 (NV), P.L. 108-424 (NV), P.L. 109-94 (CA), and P.L. 109-432 (NV)) indirectly protect wilderness water flows by prohibiting federal funds, assistance, authorization, or permits for new water resource projects or facilities within the wilderness areas (except "water guzzlers" for wildlife in P.L. 109-94).

No Claim on Water

Also in contrast to the Wilderness Act and to the statutes identified above, several wilderness statutes have explicitly denied claims to water associated with the designated wilderness areas. As discussed below, this denial of water rights has taken two different forms, each in several statutes: the direction to have no effects on water rights in specific geographic areas; and the denial of a reserved water right for all the areas designated in the statute.

Area-Specific Provisions

Several wilderness statutes have specified that they are not to have any effect on water claims or rights in a particular location. Three statutes—P.L. 95-237, P.L. 96-560, and P.L. 103-77—have directed that the claims or rights to water and water projects on the Hunter and Fryingpan Rivers and their tributaries are to be unaffected by the wilderness designations in the laws. Two statutes designating wilderness areas along the lower Colorado River—P.L. 101-628 (AZ) and P.L. 103-433 (CA)—specified that no right to Colorado River water was "expressly or impliedly" reserved. Two other statutes—P.L. 98-425 (CA) and P.L. 98-550 (WY)—specified no effect on water rights in one particular river and one specific river basin, respectively.

General Provisions

The explicit denial of reserved water rights associated with the wilderness designations has been included in 10 wilderness statutes. In four statutes—P.L. 103-433 (CA), P.L. 106-76 (CO), P.L. 111-11, Subtitle F (ID), and P.L. 111-11, Subtitle N (CO)—the denial of the reserved right is the extent of the provision. In the other six, the statutes also direct no effect on water agreements and/or state authorities. One additional statute—P.L. 103-77 (CO)—does not deny a reserved water right, but does prohibit federal assertion of and administrative and judicial consideration of any water claims.

Wilderness Study and Release

Intended or Potential Wilderness

Beginning with P.L. 94-357, the Alpine Lakes Area Management Act of 1976 (WA), Congress has enacted 17 wilderness statutes with intended or potential wilderness. These are areas within or adjoining designated wilderness areas that are to become wilderness when certain conditions have been met. In at least five statutes, areas are to be added to the designated wilderness when the

specified nonfederal lands have been acquired. In all cases but one, the areas are to become wilderness when current prohibited or inconsistent uses have ceased and/or when incompatible conditions have been remediated. In all but two of the statutes, a *Federal Register* notice that the statutory conditions have been met is required before the area is officially added to the designated wilderness.

Wilderness Study and Review

A substantial number of wilderness statutes have directed the agencies to review the wilderness potential of certain lands and to present recommendations of wilderness designations to the President and to Congress. The Wilderness Act directed the Secretary of Agriculture to review the administratively identified national forest primitive areas within 10 years, with a third of the reviews completed within three years and the second third completed within seven years.[9] The act also directed the Secretary of the Interior to review all roadless areas of 5,000 acres or more within National Park System and National Wildlife Refuge System lands; recommendations were to be completed within 10 years, with a third done within three years and another third within seven years. A similar direction to review the wilderness potential of BLM lands was enacted in § 603 of the Federal Land Policy and Management Act of 1976 (FLPMA);[10] BLM wilderness recommendations were to be presented to the President within 15 years (i.e., by 1991) and to Congress not more than two years later. Questions have been raised about the legitimacy of BLM wilderness reviews of areas not originally identified as wilderness study areas (WSAs) under FLPMA.[11]

A total of 27 additional statutes directed the review of the wilderness potential of identified lands. About two-thirds of the statutes specified a deadline for presenting recommendations, commonly two, three, or five years. Two of the laws were only wilderness review statutes, and did not designate any wilderness areas. Two additional statutes repealed previously enacted wilderness study provisions, after the studies were completed, thus effectively providing release from the interim management guidelines (discussed below). The statutorily required wilderness reviews have all been completed, and recommendations have been presented to Congress; some agency wilderness recommendations remain pending.

Wilderness reviews of national forest lands have been and continue to be controversial. The Multiple-Use Sustained-Yield Act of 1960[12] explicitly identifies "wilderness" as an acceptable use for national forest lands. The National Forest Management Act of 1976 (NFMA)[13] requires periodically revised land management plans for the national forests that:

> provide for multiple use and sustained yield of the products and services obtained therefrom in accordance with the Multiple-Use Sustained-Yield Act of 1960, and, in particular, include coordination or outdoor recreation, range, timber, watershed, wildlife and fish, and wilderness. (16 U.S.C. § 1604(e)(1))

[9] The Wilderness Act designated as wilderness the agency's administratively identified wilderness and wild areas—54 areas in 13 states with 9.1 million acres.

[10] P.L. 94-579; 43 U.S.C. §§1701 et seq.

[11] See CRS Report RS21917, *Bureau of Land Management (BLM) Wilderness Review Issues*, by Ross W. Gorte and Pamela Baldwin.

[12] P.L. 86-517; 16 U.S.C. §528-531.

[13] P.L. 94-588; 16 U.S.C. §§1600-1613.

The periodic review of potential national forest wilderness in NFMA planning was modified in 1977 to accelerate the wilderness review portion of the planning process. In January 1979, the USFS issued nationwide recommendations on more than 60 million acres of land—some areas were recommended for wilderness, some for non-wilderness uses, and some to be examined further in the ongoing planning. The Roadless Area Review and Evaluation (RARE II)[14] was successfully challenged by the State of California on procedural grounds and vacated, raising questions about the management of lands that had been recommended for non-wilderness uses.[15]

Management During and After a Wilderness Review

The Wilderness Act and most of the initial statutory wilderness review provisions were silent on the management of the areas during and after the review. The Eastern Wilderness Act, P.L. 93-622, and two other statutes (P.L. 94-577 and P.L. 105-277) directed that the wilderness characteristics of the areas under review were to be protected "until Congress determined otherwise," but only for a specified period after the recommendations were submitted (one through the third succeeding Congress, one for four years, and one until December 21, 2003). P.L. 94-199 simply directed that the wilderness character of the areas be protected. P.L. 96-550 was the first wilderness statute to require protection until Congress determined otherwise, without limitation, following the language in § 603(c) of FLPMA for the BLM wilderness study areas (WSAs). This language was used in seven other wilderness statutes. One law, P.L. 96-560, was particularly complicated—it provided the "until Congress determines otherwise" language for 10 areas, but directed grazing and mineral activities under laws generally applicable to national forests; it also limited the "until Congress determines otherwise" language to two years for one area, but directed that the Wilderness Act provisions on minerals apply to that area.

Because of the successful litigation over RARE II, many were concerned that, for areas recommended for non-wilderness uses, planned activities might be prevented if they were inconsistent with the Wilderness Act management guidelines (discussed below). A legislative provision, called *release language*, was developed to address this concern.[16] In general, release language provided that RARE II was sufficient for congressional deliberations over wilderness designation and that, in developing the first NFMA plan for a national forest, the USFS was not required to protect the wilderness characteristics of areas not designated. RARE II wilderness bills with release language were generally developed to address all the national forest lands (and occasionally some other federal lands) in a particular state. In total, 30 statewide national forest wilderness bills with release language were enacted between 1980 and 1990.[17] Because the initial NFMA plans have all been completed, release language is no longer relevant for national forest wilderness legislation.

---

[14] The first Roadless Area Review and Evaluation (RARE) was begun in 1970; it was abandoned in 1972 without recommendations, because of a challenge that the process did not comply with the National Environmental Policy Act of 1969 (NEPA, P.L. 91-190; 42 U.S.C. §§4321-4347).

[15] *California v. Bergland*, 483 F. Supp. 465 (E.D.Cal. 1980), aff'd in part, rev'd in part, 690 F.2d 753 (9th Cir. 1982). For additional information, see CRS Report RL31447, *Wilderness: Overview and Statistics*, by Ross W. Gorte.

[16] See CRS Report RS21917, *Bureau of Land Management (BLM) Wilderness Review Issues*, by Ross W. Gorte and Pamela Baldwin.

[17] States with national forest wilderness areas but not statewide wilderness bills with release language include Idaho, Illinois, Louisiana, Minnesota, Montana, South Carolina, and South Dakota. Tennessee's national forests effectively received statewide release in two wilderness statutes (P.L. 98-578 and P.L. 99-490) designating national forest wilderness in the state.

Because FLPMA required the BLM to preserve the wilderness characteristics of its WSAs until Congress determines otherwise, release language for the WSAs not designated as wilderness is particularly important. It is also more controversial, because the BLM land and resource management planning process established in FLPMA does not mention wilderness and does not require periodic revision of the plans. Thus, release for BLM WSAs could be virtually permanent, in contrast to the periodic review required for national forest roadless areas. Since the BLM wilderness recommendations were made for each western state (because the BLM is organized into state offices), it is perhaps surprising that only one statewide BLM wilderness statute with release language (in contrast to statewide 30 USFS statutes with release language) has been enacted—P.L. 101-628, the Arizona Desert Wilderness Act of 1990. Release language for specific BLM WSAs has been enacted in 15 wilderness statutes.

Prohibited Uses

The Wilderness Act, directly and by cross-reference in virtually all subsequent wilderness statutes, generally prohibits commercial activities, motorized uses, and roads, structures, and facilities in units of the National Wilderness Preservation System designated by acts of Congress. Specifically, § 4(c) states:

> Except as specifically provided for in this Act, and subject to existing private rights, there shall be no commercial enterprise and no permanent road within any wilderness area designated by this Act and, except as necessary to meet minimum requirements for the administration of the area for the purpose of this Act (including measures required in emergencies involving the health and safety of persons within the area), there shall be no temporary road, no use of motor vehicles, motorized equipment or motorboats, no landing of aircraft, no other form of mechanical transport, and no structure or installation within any such area.

This section thus prohibits most businesses, except "for activities which are proper for realizing the recreational or other wilderness purposes of the areas" (§ 4(d)(6)). This section effectively prohibits development of commercial resources, such as timber, although the Wilderness Act permits livestock grazing and some mineral development, as discussed below.

The Wilderness Act also prohibits motorized or mechanical entry, via cars, trucks, off-road or all-terrain vehicles, bicycles, aircraft, or motorboats, except in emergencies and in specified circumstances, as discussed below. Finally, the act prohibits human infrastructure—roads, buildings, dams and pipelines, and such—from wilderness areas, although the act is silent on the treatment (e.g., maintenance or removal) of infrastructure within designated wilderness areas; many of the provisions in wilderness statutes addressing nonconforming uses address existing and potential infrastructure in designated areas.

Area Closures to Public Access

In addition, several wilderness statutes authorized closing certain wilderness areas to some public access. Five statutes authorized temporarily closing areas to hunting, fishing, and trapping for public safety, administration, and use and enjoyment of the areas.[18] Two statutes—P.L. 109-362

[18] Such closure authorizations have been included in many of the statutes designating other special management areas within the national forests; see CRS Report R41285, *Congressionally Designated Special Management Areas in the* (continued...)

and P.L. 111-11, Subtitle L—authorized temporary closures for tribal religious or cultural needs and activities. P.L. 106-65 authorized closure of a portion of a wilderness abutting the Mexican border for public safety and national security. Finally, P.L. 107-107 directed that the designated wilderness area be closed to the public, because it had been the "Live Impact Area" of the Vieques Naval Training Range and could still contain some live munitions.

Withdrawal from Public Land, Mining, and Mineral Leasing Laws

Withdrawal in this context is the term used for preventing an individual from obtaining title to federal lands or resources under the various laws that have historically permitted such actions.

Public Land Laws

Public land laws refer to the array of statutes that allowed individuals to obtain title to unreserved public domain lands—that is, to federally owned lands that were obtained by purchase or treaty from a sovereign power (the public domain) and that had not been reserved for a particular purpose by Congress. The best known of the public land laws was the Homestead Act, which allowed settlers to obtain title to 160 acres of unreserved public domain lands by agreeing to develop the lands and live on them for at least five years.

The Wilderness Act is silent on the application or withdrawal of areas designated from the public land laws. This is likely because the areas designated were all within national forests, which were already withdrawn from the public land laws as congressionally authorized reservations of land. Similarly, therefore, all wilderness designations are automatically withdrawn from the public land laws, because the designations are implicitly congressional reservations of federal land. Furthermore, the vast majority of the public land laws were repealed in Title VII of the Federal Land Policy and Management Act of 1976 (FLPMA, P.L. 94-579). Nonetheless, 14 wilderness statutes, beginning with P.L. 106-353 in 2000, still have explicitly withdrawn the designated areas from disposal under the public land laws.

Mining and Mineral Leasing Laws

The General Mining Law of 1872 (30 U.S.C. Chapter 2) established a system of relatively free access for individuals and corporations to prospect for hardrock (or locatable) minerals (e.g., gold, silver, copper) on open federal lands and to stake a claim on the deposit. The minerals can then be extracted from sites with valid mining claims. The claim can be "patented" to transfer title to the land to the claimant, although patenting the land is not required to extract the minerals.

Mineral leasing for "coal, phosphate, sodium, potassium [potash], oil, oil shale, gilsonite (including all vein-type solid hydrocarbons), or gas" under federal lands is governed by the Mineral Leasing Act of 1920 (30 U.S.C. §§ 181 et seq.) and the Mineral Leasing Act for Acquired Lands (31 U.S.C. §§ 351 et seq.). Leases are generally offered to the public competitively, and establish a right to extract the leased mineral in exchange for payment of fees and royalties. In addition, the Geothermal Steam Act of 1970 (P.L. 91-581; 30 U.S.C. §§ 1001 et seq.) allows

(...continued)

National Forest System, by Ross W. Gorte.

geothermal energy production from federal lands nominated for leasing. The Geothermal Steam Act does not exclude wilderness areas from lands that can be nominated for leasing.

The Wilderness Act allowed continued prospecting in wilderness areas (§ 4(d)(2)). It also allowed filing claims to hardrock minerals and establishing contracts for leasable minerals within wilderness areas "until midnight on December 31, 1983." As discussed below, the Wilderness Act included guidelines for administering valid mineral rights. Since 1978, 18 wilderness statutes have explicitly withdrawn the designated areas from availability under the General Mining Law. These statutes also withdrew the designated areas from availability under the Mineral Leasing Act and Geothermal Steam Act, except for P.L. 95-495 (withdrawn under neither law), P.L. 96-428 (not withdrawn from geothermal leasing), and P.L. 111-11, Subtitle G (not withdrawn from mineral leasing). These provisions seem to be becoming more common, as 6 of the 16 wilderness subtitles of P.L. 111-11 and five of the six laws enacted in the 109th Congress withdraw the lands.

Mineral Materials

The Materials Act of 1947 (30 U.S.C. §§ 601 et seq.) authorizes the sale of common variety mineral materials—sand, gravel, crushed rock, and others—from federal lands. Beginning in 1996, 12 wilderness statutes have withdrawn the designated lands from disposal of common variety mineral materials.

Nonconforming Permitted Uses

The Wilderness Act and a large number of subsequent wilderness statutes allow uses, activities, or infrastructure that do not conform with the general prohibitions on commercial activities, motorized access, and infrastructure. Many of these nonconforming permitted uses were explicitly allowed in the Wilderness Act, including access for management and emergencies and access for inholdings, as well as activities for controlling fires and insect and disease infestations, continued motorized access, livestock grazing, and water project developments. Subsequent statutes have expanded on these provisions and have addressed additional concerns, such as fish and wildlife management activities, development or maintenance of and access to certain existing and potential infrastructure, military overflights of wilderness areas, mineral activities, and access for other specific purposes.

Access for Management Requirements and Emergencies

The Wilderness Act, in the provision cited above, explicitly allowed motorized access for "minimum management requirements" and "emergencies involving health and safety." Interestingly, neither Congress nor the agencies have defined the *minimum management requirements* for which motorized access is allowed. One statute, P.L. 90-352, reiterated the Wilderness Act provision. In addition, P.L. 98-425 explicitly allowed motorized access on a particular fire road between two designated wilderness areas for administrative purposes. Two statutes—P.L. 98-406 and P.L. 101-628—modify authorized uses of particular roads within the designated wilderness. No other wilderness statutes have addressed access for management or emergencies.

Access to Nonfederal Inholdings

Inholdings are nonfederally owned lands—lands owned by state or local governments or by a private individual or entity—that are contained within (surrounded by) a federal unit, such as a national park, national forest, national wildlife refuge, or designated wilderness. The Wilderness Act explicitly directs that nonfederal landowners "be given such rights as may be necessary to assure adequate access" to their lands. The act also provides reasonable access for valid mining claims and other valid occupancies, requiring that the Secretary "shall, by reasonable regulations consistent with the preservation of the area of wilderness, permit ingress and egress to such surrounded areas by means which have been or are being customarily enjoyed with respect to other such areas similarly situated."

Subsequent wilderness statutes have generally followed the Wilderness Act provisions. The first access provision, in P.L. 98-406, allowed limited access for private and administrative purposes along one route into one designated wilderness areas. Ten additional statutes have paralleled the Wilderness Act, directing reasonable access or adequate access for reasonable use and enjoyment of the surrounded nonfederal lands. One statute, P.L. 106-353, also included the right of public access, including for commercial vehicles, to one area.

Fire, Insect, and Disease Control

The Wilderness Act specifically authorized exceptions to the general prohibitions on activities in wilderness areas for controlling fires and insect and disease infestations; § 4(d)(1) allowed that "such measures may be taken as may be necessary in the control of fire, insects, and diseases, subject to such conditions as the Secretary deems desirable." This language has been cited or replicated in 23 subsequent wilderness statutes, beginning in 1978. It has become more common in recent years; for example, such a provision was included in 8 of the 16 wilderness subtitles of P.L. 111-11. In three wilderness statutes, control activities are described as appropriate for watershed protection, and in one for the necessary control of southern pine beetles. Finally, one statute—P.L. 96-560—required a review of the practices, policies, and regulations to control diseases, insects, and forest fires to insure timely and efficient control; reasonable protection of adjacent lands; and conformance with the intent of Congress.

Continued Motorized Uses

Despite prohibiting motorized access to designated wilderness areas, the Wilderness Act also explicitly directed, in § 4(d)(1), that "the use of aircraft or motorboats, where these uses have already become established, may be permitted to continue subject to such restrictions as the Secretary ... deems desirable." Several subsequent wilderness statutes have provided explicit guidance on continued motorized access. Most commonly (five statutes), the provisions allow motorboats in particular lakes or streams; in at least one instance, the size of the motors that can be used is restricted. Two statutes—P.L. 95-495 and P.L. 96-487—authorized motorized portages between lakes. Two statutes—P.L. 95-495 and P.L. 110-229—specifically authorized continued aircraft use within the areas. (Military aircraft flights over wilderness areas are discussed separately, below.) Finally, two statutes—P.L. 95-495 and P.L. 108-447—authorized the continued use of snowmobiles in specific areas. As can be seen from this brief summary, P.L. 95-495, the Boundary Waters Canoe Area Wilderness, contained more of these types of provisions than other wilderness statutes; P.L. 95-495 is also the only wilderness statute that amended the

Wilderness Act, adding a new § 4(d)(5) addressing management of the areas, including continued motorboat use.

Livestock Grazing

Continued livestock grazing in wilderness has attracted substantial attention. The Wilderness Act, in § 4(d)(4)(2), specifically directed that "the grazing of livestock, where established prior to the effective date of this Act, shall be permitted to continue subject to such reasonable regulations as are deemed necessary by the Secretary of Agriculture."

Despite this language, many have expressed concerns that wilderness designations will reduce historic livestock grazing. The concerns were sufficient for the House Committee on Interior and Insular Affairs to include a discussion of the congressional intent for continued livestock grazing management in wilderness areas in the committee report on P.L. 96-560—H.Rept. 96-617. Continued concerns led the House Committee on Interior and Insular Affairs to expound still further on the congressional intent for continuing livestock grazing in designated wilderness areas. The committee included "Appendix A—Grazing Guidelines" in H.Rept. 101-405 that accompanied the bill that was enacted as P.L. 101-628. (Summaries of the relevant portions of the committee reports are included following the respective statutes in **Appendix B**.)[19]

A total of 33 subsequent wilderness statutes have expressly directed continued livestock grazing in conformance with the Wilderness Act. The majority (27 statutes) have also directed that grazing be managed in conformance with § 108 of P.L. 96-560; with the relevant portion of H.Rept. 96-617; with § 101(f) of P.L. 101-628; and/or with Appendix A of H.Rept 101-405. Several (at least 11 statutes) have modified the continuation to be "subject to such reasonable regulations, policies, and practices as are deemed necessary." Such provisions seem to be becoming more common; 9 of the 16 wilderness subtitles in P.L. 111-11 and four of the six wilderness statutes enacted in the 109th Congress included grazing management provisions.

A few wilderness statutes have contained additional provisions. Five statutes directed the agencies to conduct a study to insure that the grazing regulations, policies, and practices were in accordance (or in conformance) with the Wilderness Act. A sixth statute (P.L. 111-11, Subtitle F) directed an inventory of grazing-related facilities and improvements, and acceptance of donations with subsequent cancellation of grazing permits within the wilderness areas.[20] Two statutes (P.L. 96-550 and P.L. 111-11, Subtitle F) explicitly allowed additional fencing within the wilderness, while another (P.L. 98-425) explicitly allowed motorized access for livestock management.

Access for Water Infrastructure

Numerous wilderness statutes have provided for the maintenance and reconstruction of existing water resource infrastructure (dams, canals, pipelines, etc.) and construction of new infrastructure

[19] The House Committee on Interior and Insular Affairs slightly modified the language in H.Rept. 96-617 and reproduced it in H.Rept. 96-1126 (the conference report that accompanied P.L. 96-312). However, the reference in subsequent wilderness statutes is to §108 of P.L. 96-560 that refers to H.Rept. 96-617, and thus H.Rept. 96-617 is presented here and in **Appendix B**.

[20] Typically when a grazing permit is relinquished, the agency reoffers it to an appropriate livestock operator.

in some instances, usually with permission for the necessary motorized access to accomplish these actions. The Wilderness Act allowed the President to permit such activities:

> The President may, within a specific area and in accordance with such regulations as he may deem desirable, authorize prospecting for water resources, the establishment and maintenance of reservoirs, water-conservation works, power projects, transmission lines, and other facilities needed in the public interest, including the road construction and maintenance essential to development and use thereof, upon his determination that such use or uses in the specific area will better serve the interests of the United States and the people thereof than will its denial. (§ 4(d)(4)(1)

A total of 13 subsequent wilderness statutes have provided for the construction, operation, and maintenance of water resource facilities, for one specific area in some statutes and for all the areas designated in other statutes. In contrast to many other provisions, the language in each of these statutes appears to be unique, without clear repetition of the same language. In at least two statutes—P.L. 95-237 and P.L. 98-428—helicopter access is allowed for sanitary facilities within wilderness areas.

In addition, six wilderness statutes effectively prohibit new water resource development within the wilderness areas. The language is virtually identical in the six statutes: "neither the President nor any other officer, employee, or agent of the United States shall fund, assist, authorize, or issue a license or permit for the development of any new water resource facility within the wilderness areas designated by this Act."

Access for Other Infrastructure

Eleven wilderness statutes allow for the construction and maintenance of, and generally limited motorized access in support of, facilities for hydrological, meteorological, climatological, atmospheric, and/or telecommunications needs. The language used is often similar, but is also usually distinct in some manner. In some instances, the infrastructure is allowed if it is essential to flood control and reservoir operations or for research; in other cases, it must be appropriate for science, education, or conservation purposes. Some statutes direct reasonable or prescribed terms and conditions for the infrastructure and/or access.

Another nine wilderness statutes provide for the maintenance of specific facilities, and access for such activities. Two statutes direct the maintenance of specific trails and associated structures; another allows the maintenance of cabins in specific areas. One directs the conversion of roads to trails. One statute allows operation and maintenance of a lookout tower; another allows motorized access for the removal of a fire tower. Two statutes allow the operation, maintenance, upgrade, and replacement of power lines through specific areas. Finally, one statute authorizes the right-of-way and construction of a space laser energy facility within 15 years (now expired, without such construction).

Access for Fish and Wildlife Management Activities

As noted above, the Wilderness Act and several subsequent wilderness statutes direct that the wilderness designations are to have no effect on state jurisdiction or responsibilities for fish and wildlife. As also noted above, three wilderness statutes authorize periods when or zones where the wilderness may be closed to hunting, fishing, and trapping, for safety and administrative reasons.

Several statutes have also provided for facilities or motorized access in support of state fish and wildlife management. In six instances, the provisions apply only to one area or activity. The House Committee on Interior and Insular Affairs report, H.Rept. 101-405, accompanying the bill enacted as P.L. 101-628, included a lengthy Appendix B—Wildlife Management Guidelines. This committee report provides detailed guidance on the committee's statement of congressional intent regarding motorizes access, facilities, and state agency activities for fish and wildlife management within wilderness areas; the statute itself contains no direction on access for fish and wildlife management activities. (A summary of this appendix follows P.L. 101-628 in **Appendix B** of this report.)

In contrast to the Grazing Guidelines (Appendix A) of H.Rept. 101-405, the Wildlife Management Guidelines have not been referenced in subsequent wilderness statutes. Instead, five statutes—P.L. 107-282 (NV); P.L. 108-424 (NV); P.L. 109-432 (NV); P.L. 111-11, Subtitle F (ID); and P.L. 111-11, Subtitle O (UT)—contain lengthy provisions directing state fish and wildlife management within the designated wilderness areas. These provisions are similar to, but less detailed than, H.Rept. 101-405, Appendix B—Wildlife Management Guidelines.

Low-Level Military Overflights

A concern about the limitations of wilderness designations on military air training arose in the late 1980s. P.L. 101-195, the Nevada Wilderness Protection Act of 1989, included a provision directing that the statute would have no effect on low-level military overflights, new units of special use airspace, or military flight training routes over four specific wilderness areas. Similar language has been included in 11 subsequent wilderness statutes, primarily in Nevada and southern California, but also in Arizona, Idaho, and Utah.

Access for Minerals Activities

As discussed above, the Wilderness Act (and many subsequent wilderness statutes) withdrew designated wilderness areas from access under the mining and mineral leasing laws after December 31, 1983. However, § 4(d)(2) of the act allows mineral prospecting, as long as it is conducted "in a manner compatible with the preservation of the wilderness environment." In addition, for the nearly 20 years after its enactment, § 4(d)(3) of the Wilderness Act allowed establishing and developing valid mineral rights in wilderness areas,

> subject, however, to such reasonable regulations governing ingress and egress as may be prescribed by the Secretary of Agriculture consistent with the use of the land for mineral location and development and exploration, drilling, and production, and use of land for transmission lines, waterlines, telephone lines, or facilities ... including where essential the use of mechanized ground or air equipment.... Mineral leases, permits, and licenses ... shall contain such reasonable stipulations as may be prescribed by the Secretary of Agriculture for the protection of the wilderness character of the land consistent with the use of the land for the purposes for which they are leased, permitted, or licensed.

Several subsequent wilderness statutes have also addressed minerals. Two—P.L. 95-237 and P.L. 98-428—directed continued development of mineral information within the designated areas. Another two statutes—P.L. 96-312 and P.L. 98-425—provided for cobalt extraction from within specific wilderness areas. Finally, P.L. 106-456 allowed the historic uses of an existing mine road within a wilderness area.

Access for Other Specific Activities

As discussed above under "Prohibited Uses," the Wilderness Act generally prohibited commercial activities within wilderness areas, except in support of recreational and other appropriate uses of wilderness areas. This direction was restated in the reverse—allowing commercial activities that support recreational and other wilderness purposes—in P.L. 96-312 and P.L. 111-11, Subtitle F. In addition, Subtitle K and Subtitle M of P.L. 111-11 addressed concerns about the implementation of this provision. Subtitle K directed that outfitter and guide permits for the additional designated wilderness areas were to be added to the existing limits for wilderness. Both subtitles directed that the wilderness designation was not to reduce riding or pack stock use or impose additional use constraints in the areas, in accordance with the Wilderness Act and "subject to any terms and conditions determined to be necessary by the Secretary." Finally, P.L. 111-11, Subtitle A, authorized a competitive event through the designated wilderness to continue.

Various wilderness statutes have authorized access to specific areas for other specific purposes. Two statutes—P.L. 97-384 and P.L. 101-633—authorized access to cemeteries that were within the designated wilderness areas. Three wilderness statutes addressed rights-of-way; one (P.L. 95-249) directed no effect on two rights-of-way claims, another (P.L. 98-425) authorized a powerline right-of-way if an application were made within 10 years (it was not), and the third (P.L. 103-433) authorized a right-of-way for the Department of Defense in one area. Finally, five statutes addressed access for Native American activities. Three—P.L. 107-282, P.L. 108-424, and P.L. 109-432—directed no diminution of tribal access to wilderness areas. Another (P.L. 109-362) directed access in accordance with the Wilderness Act (which was silent on the issue of tribal access) and the American Indian Religious Freedom Act.[21] The fifth statute (P.L. 111-11, Subtitle L) allowed for Native American access to a specific areas. P.L. 109-362 and P.L. 111-11, Subtitle L also allowed temporary closures for tribal needs, as noted above.

[21] P.L. 95-341, 42 U.S.C. §1996.

Appendix A. List of Wilderness Statutes Containing the Various Statutory Provisions and Guidelines on Prohibited and Permitted Uses

This appendix identifies the specific section in each of the wilderness statutes containing the provisions specified. Because of the 16 subtitles in P.L. 111-11, the subtitle letter is shown following the statute number to assist in finding the provision (with IIE used for Subtitle E of Title II; the other subtitles are all in Title I). The provisions are summarized or quoted for each statute, in chronological order, in **Appendix B**.

Statutory Provisions

General Management Guidance

Manage in Accordance with the Wilderness Act (P.L. 88-577)—All Statutes Except:

P.L. 90-532	P.L. 90-544	P.L. 92-476

Prepare a Management Plan

P.L. 95-237, § 2(c)	P.L. 96-312, § 5(a)	P.L. 106-353, § 6(h)	P.L. 111-11, F, § 1503(b)(5)

No Buffer Zones

P.L. 96-550, § 105	P.L. 96-560, § 110	P.L. 98-328, § 6	P.L. 98-339, § 9
P.L. 98-406, § 101(d)	P.L. 98-428, § 303	P.L. 98-508, § 7	P.L. 98-550, § 504
P.L. 98-585, § 9	P.L. 98-586, § 7	P.L. 100-184, § 7	P.L. 100-499, § 7
P.L. 100-668, Title IV (a)(3)	P.L. 101-195, § 7	P.L. 101-401, § 6	P.L. 101-628, § 101(d)
P.L. 101-633, § 6	P.L. 102-301, § 3(d)	P.L. 103-77, § 3(e)	P.L. 103-433, § 103(d)
P.L. 106-145, § 8	P.L. 106-353, § 6(i)	P.L. 107-282, § 204	P.L. 108-424, § 205
P.L. 109-163, § 384(h)	P.L. 109-362, § 4(l)	P.L. 109-432, § 325	P.L. 111-11, C, § 1202(f)
P.L. 111-11, F, § 1503(b)(10)	P.L. 111-11, L, § 1851(b)(3)	P.L. 111-11, O, § 1972(b)(4)	

No Effect on State Fish and Wildlife Jurisdiction and Responsibilities

P.L. 88-577, § 4(d)(8)	P.L. 95-495, § 14	P.L. 96-312, § 7(c)	P.L. 98-322, § 104(b)
P.L. 98-406, § 101(e)(2)	P.L. 98-550, § 503	P.L. 98-585, § 5(b)	P.L. 100-184, § 8
P.L. 100-499, § 18	P.L. 101-195, § 9	P.L. 101-401, § 8	P.L. 101-628, § 101(e)
P.L. 101-633, § 7	P.L. 103-77, § 3(c)	P.L. 103-433, § 103(e)	P.L. 106-76, § 8(c)
P.L. 107-282, § 208(a)	P.L. 107-370, § 3(c)	P.L. 108-424, § 209(a)	P.L. 109-94, § 3(h)
P.L. 109-163, § 384(f)	P.L. 109-362, § 4(j)(2)	P.L. 109-382, § 104(c) & § 213(b)	P.L. 109-432, § 329(a)

P.L. 111-11, A, § 1001(e)	P.L. 111-11, C, § 1202(g)	P.L. 111-11, E, § 1405(c)(4)	P.L. 111-11, F, § 1503(b)(8)(A)
P.L. 111-11, G, § 1602(c)(4)	P.L. 111-11, K, § 1803(i)(2)	P.L. 111-11, O, § 1972(b)(10)	P.L. 111-11, IIE, § 2405(i)

No Effect on Other Jurisdiction and Authorities

P.L. 95-495, §§ 16 & 17	P.L. 98-550, § 505	P.L. 101-628, § 301(g)	P.L. 103-433, § 103(g)
P.L. 106-65, § 3032	P.L. 106-145, § 6(b)	P.L. 107-282, § 211	P.L. 111-11, H, § 1653(b)
P.L. 111-11, K, § 1802(1)	P.L. 111-11, L, § 1851(b)(3)		

Land & Rights Acquisition

P.L. 88-577, § 5(c)	P.L. 93-622, § 6(b)	P.L. 97-466, § 4	P.L. 98-425, § 103(c)
P.L. 98-574, § 5	P.L. 100-184, § 9	P.L. 101-628, § 101(i)	P.L. 103-77, § 2(a)(8)
P.L. 104-333, § 1022(b)(4)			

Water Rights

No Effect on State Authorities and Water Agreements

P.L. 95-495, § 15	P.L. 96-550, § 102(a)(9)	P.L. 101-628, § 302	P.L. 103-77, § 8(b)
P.L. 103-433, § 203	P.L. 106-353, § 6(l)(2)	P.L. 107-282, § 203(d)	P.L. 108-424, § 204(d)
P.L. 108-447, § 140(d)(8)	P.L. 109-94, § 3(i)	P.L. 109-432, § 324(d)	P.L. 111-11, O, § 1972(b)(9)
P.L. 111-11, IIE, § 2405(h)			

Neither Claim Nor Denial of Claim

P.L. 88-577, § 4(d)(7)	P.L. 96-312, § 7(b)	P.L. 98-406, § 101(e)(1)	P.L. 98-428, § 302(a)
P.L. 98-550, § 502	P.L. 106-399, § 203		

Reserved Water Rights

P.L. 100-668, § 502	P.L. 101-195, § 8	P.L. 101-628, §§ 101(g) & 301(c)	P.L. 102-301, § 3(e)
P.L. 103-433, § 706	P.L. 107-370, § 3(d)		

No Claim on Water—Geographic-Specific Provisions

P.L. 95-237, § 2(e)	P.L. 96-560, § 102(a)(5)	P.L. 98-425, § 101(a)(25)	P.L. 98-550, § 201(c)
P.L. 101-628, § 301(c)	P.L. 103-77, §§ 2(a)(13) & 8(g)(1)	P.L. 103-433, § 204	

No Claim on Water—General Provisions

P.L. 103-77, § 8(b)	P.L. 106-76, § 10	P.L. 106-353, § 6(l)(2)(A)	P.L. 107-282, § 203(d)
P.L. 108-424, § 204(d)(2)(A)	P.L. 109-94, § 3(i)(A)	P.L. 109-432, § 324(d)(3)(A)	P.L. 110-11F, § 1503(b)(12)
P.L. 111-11, N, § 1952(f)	P.L. 111-11, O, § 1972(b)(9)		

Wilderness Study and Release

Intended or Potential Wilderness

P.L. 94-357, §§ 3(d) & (e)	P.L. 94-544, § 1	P.L. 94-567, § 3	P.L. 95-625, § 403
P.L. 97-250, § 2(a)	P.L. 98-425, §§ 106 & 108	P.L. 100-524, § 2(b)	P.L. 100-668,Title IV (a)(2)
P.L. 102-301, § 2(5)	P.L.103-433, § 601(b)	P.L. 109-362, § 6	P.L. 111-11, B, § 1103
P.L. 111-11, C, § 1202(c)	P.L. 111-11, I, § 1702(c)	P.L. 111-11, L, § 1853(c)	P.L. 111-11, M, § 1902
P.L. 111-11, N, § 1952(c)			

Wilderness Study and Review

P.L. 88-577, §§ 3(b) & (c)	P.L. 90-544, § 604	P.L. 92-400, § 5	P.L. 92-476, § 5(b)
P.L. 92-521, § 4	P.L. 92-528, § 1(a)	P.L. 93-622, § 4 & § 6(a)	P.L. 94-199, § 8
P.L. 94-557, §§ 3(b) & (d)	P.L. 94-567, § 8	P.L. 94-579, § 603	P.L. 95-150
P.L. 96-487, § 704	P.L. 96-550, § 103	P.L. 96-560, §§ 105 & 106	P.L. 98-323, § 104(e)
P.L. 98-324, § 6	P.L. 98-406, § 102(a)	P.L. 98-425, §§ 102 & 111(e)	P.L. 98-430, § 2
P.L. 98-514, § 5(e)	P.L. 98-550, § 301	P.L. 98-578, § 6	P.L. 98-586, § 6
P.L. 101-628, § 102	P.L. 103-433, § 105	P.L. 105-277, § 610	P.L. 106-399, § 204
P.L. 111-11, B, § 1102(B)			

Management During and After Review and Release in a Statewide Statute

P.L. 96-487, § 708	P.L. 96-550, § 104	P.L. 96-560, § 107	P.L. 97-384, § 4
P.L. 97-407, § 5	P.L. 97-466, § 5	P.L. 98-321, § 5	P.L. 98-322, § 105
P.L. 98-323, § 104	P.L. 98-324, § 5	P.L. 98-328, § 7	P.L. 98-339, § 5
P.L. 98-406, § 103	P.L. 98-425, § 111	P.L. 98-428, § 201	P.L. 98-430, § 6
P.L. 98-508, § 4	P.L. 98-514, § 5	P.L. 98-515, § 5	P.L. 98-550, § 401
P.L. 98-574, § 5	P.L. 98-585, § 8	P.L. 98-586, § 5	P.L. 99-197, § 4
P.L. 99-504, § 104	P.L. 100-184, § 6	P.L. 100-499, § 6	P.L. 100-547, § 202
P.L. 101-195, § 5	P.L. 101-401, § 5	P.L. 101-628, § 102	

Management During and After Review and Release of Specific Areas

P.L. 98-140, §§ 3(a)-(c)	P.L. 98-578, § 5	P.L. 99-490, § 5	P.L. 100-326, § 4
P.L. 102-301, § 5	P.L 103-77, § 4	P.L.103-433, § 104(a)	P.L. 106-145, § 5
P.L. 107-282, § 207	P.L. 108-424, § 208	P.L. 109-94, § 3(f)	P.L. 109-163, § 384(i)
P.L. 109-362, § 5	P.L. 109-432, § 328	P.L. 111-11, F, § 1503(a)(1)	P.L. 111-11, G, § 1602(e)
P.L. 111-11, I, § 1703	P.L. 111-11, J, § 1753	P.L. 111-11, K, § 1804	P.L. 111-11, O, § 1972(c)

Prohibited Uses

General Prohibitions

P.L. 88-577, § 4(c)	P.L. 90-532, § 3

Area Closures

P.L. 93-429, § 3	P.L. 106-65, § 3032(i)	P.L. 106-353, § 6(f)	P.L. 107-107, § 1049
P.L. 107-282, § 208(e)	P.L. 108-424, § 209(e)	P.L. 109-362, § 4(k)	P.L. 109-432, § 329(e)
P.L. 111-11, L, § 1853(d)(6)			

Withdrawal from Public Land, Mining, Mineral Leasing, Geothermal Leasing, and/or Mineral Materials Laws

P.L. 88-577, § 4(d)(3)	P.L. 95-495, § 14	P.L. 96-428, § 1	P.L. 98-425, § 306(a)(1)
P.L. 104-333, § 1022(b)(4)	P.L. 106-353, § 6(c)	P.L. 107-282, § 202(d)	P.L. 108-424, § 203(d)
P.L. 109-94, § 3(j)	P.L. 109-163, § 384(b)	P.L. 109-362, § 4(d)	P.L. 109-382, § 104(d)
P.L.109-432, § 323(d)	P.L. 111-11, C, § 1202(i)	P.L. 111-11, F, § 1503(b)(2)	P.L. 111-11, G, § 1602(d)
P.L. 111-11, K, § 1803(d)	P.L. 111-11, L, § 1853(d)(3)	P.L. 111-11, IIE, § 2405(a)	

Notes:

P.L. 88-577, P.L. 95-495, P.L. 96-428, P.L. 98-425, and P.L. 104-333 did not explicitly withdraw lands under the public land laws.

P.L. 95-495 and P.L. 111-11, Subtitle G did not explicitly withdraw lands from the mineral leasing laws.

P.L. 88-577, P.L. 96-428, P.L. 98-425, P.L. 108-424, P.L. 109-382, and P.L. 109-432 did not explicitly withdraw lands from the mineral materials laws.

Nonconforming Permitted Uses

Access for Management Requirements and Emergencies

P.L. 88-577, § 4(c)	P.L. 90-352, § 3	P.L. 98-406, § 101(a)(23)	P.L. 98-425, § 101(a)(6)
P.L. 101-628, § 101(k)			

Access to Nonfederal Inholdings

P.L. 88-577, § 5(a) & (b)	P.L. 98-406, § 101(a)(23)	P.L. 100-184, § 9	P.L.106-353, § 9
P.L. 106-399, § 202(c)	P.L. 106-456, § 3(b)	P.L. 109-362, § 4(f)	P.L.110-229, § 101(c)(2)
P.L. 111-11, F, § 1503(b)(7)	P.L. 111-11, G, § 1602(c)(5)	P.L. 111-11, I, § 1702(b)(4)	P.L. 111-11, K, § 1803(f)

Fire, Insect, and Disease Control

P.L. 88-577, § 4(d)(1)	P.L. 95-237, § 2(c)	P.L. 96-560, § 109	P.L. 98-425, § 103(b)(2)
P.L. 100-184, § 10	P.L. 100-499, § 16	P.L. 100-547, § 201(c)	P.L. 101-401, § 7
P.L. 101-633, § 8	P.L. 102-301, § 3(b)	P.L. 106-145, § 6(b)	P.L. 107-282, § 209
P.L. 107-370, § 4	P.L. 108-424, § 210	P.L. 109-362, § 4(e)	P.L. 109-432, § 330
P.L. 111-11, C, § 1202(h)	P.L. 111-11, E, § 1405(c)(2)	P.L. 111-11, F, § 1503(b)(9)	P.L. 111-11, K, § 1803(e)
P.L. 111-11, L, § 1853(d)(4)	P.L. 111-11, N, § 1952(g)	P.L. 111-11, O, § 1972(b)(3)	P.L. 111-11, IIE, § 2405(e)(3)

Continued Motorized Uses

P.L. 88-577, § 4(d)(1)	P.L. 93-429, § 2	P.L. 95-495, §§ 4 & 8	P.L. 96-312, § 7(a)(1)
P.L. 96-487, § 103(b)	P.L. 98-425, § 101(a)(7)	P.L. 98-430, § 1(4)	P.L. 102-301, § 2(5)
P.L. 108-447, § 140(d)(2)	P.L. 109-362, § 4(m)	P.L. 110-229, § 10(b)(3) & (4)	P.L. 111-11, H, §§ 1653(b) & 1654

Livestock Grazing

P.L. 88-577, § 4(d)(4)(2)	P.L. 96-312, § 7(a)(2)	P.L. 96-550, § 102(a)(5)	P.L. 96-560, § 108 & H.Rept. 96-617
P.L. 98-406, §§ 101(f)(1) & 302(b)	P.L. 98-425, §§ 101(a)(2) & (25) & 103(b)(1)	P.L. 98-428, § 301	P.L. 98-603, § 102(a)
P.L. 99-504, § 102(a)	P.L. 99-584, § 2(b)	P.L. 100-225, § 402(b)	P.L. 101-195, § 6(a)
P.L. 101-628, § 101(f) & H.Rept. 101-405, App. A	P.L. 103-77, § 3(b)	P.L. 103-433, § 103(c)	P.L. 106-353, § 6(g)(2)
P.L. 106-399, § 202(d)(1)	P.L. 106-554, § 8(d)	P.L. 107-282, § 203(b)	P.L. 107-370, § 3(b)
P.L. 108-424, § 204(b)	P.L. 109-94, § 3(g)	P.L. 109-163, § 384(g)	P.L. 109-362, § 4(b)
P.L. 109-432, § 324(b)	P.L. 111-11, E, § 1405(c)(3)	P.L. 111-11, F, § 1503(b)(3)	P.L. 111-11, G, § 1602(c)(3)
P.L. 111-11, I, § 1702(b)(3)	P.L. 111-11, J, § 1752(b)(3)	P.L. 111-11, K, § 1803(h)	P.L. 111-11, L, § 1853(d)(5)
P.L. 111-11, O, § 1972(b)(2)	P.L. 111-11, IIE, § 2405(b)(2)		

Study of Grazing Regulations, Policies, and Practices

P.L. 98-406, § 101(f)(2)	P.L. 98-428, § 301(b)	P.L. 98-550, § 501	P.L. 99-504, § 102(b)
P.L. 101-195, § 6(b)	P.L. 101-628, § 101(f)(2)		

Access for Water Infrastructure

P.L. 88-577, § 4(d)(4)(1)	P.L. 91-82, § 3	P.L. 95-237, § 2(i)	P.L. 95-495, § 13
P.L. 96-312, § 7(a)(4)	P.L. 96-560, § 102(a)(17)	P.L. 96-585, § 1(d)	P.L. 98-428, § 302(b)
P.L. 98-603, § 109	P.L. 100-668, § 202	P.L. 101-628, §§ 101(a)(3) & 101(l)	P.L. 103-77, §§ 8(d)(4), (e), & (f)
P.L. 107-370, § 7	P.L. 111-11, M, § 1902(1)(C)		

Prohibition on New Water Infrastructure

P.L. 103-77, § 8(c)	P.L. 107-282, § 203(d)(4)(B)	P.L. 108-424, § 204(d)(4)(B)	P.L. 109-94, § 3(i)(4)(B)
P.L. 109-432, § 324(d)(5)(B)	P.L. 111-11, IIE, § 2405(h)(3)		

Access for Other Infrastructure

Meteorological, Hydrological, and Related Infrastructure

P.L. 98-406, § 101(a)(13)	P.L. 98-428, § 305	P.L. 101-195, § 10	P.L. 107-282, § 210
P.L. 108-424, § 211	P.L. 109-118, § 3(d)	P.L. 109-362, § 4(g)	P.L. 109-432, § 331
P.L. 110-229, § 101(b)(3)	P.L. 111-11, M, § 1903(c)	P.L. 111-11, O, § 1972(b)(8)	

Other Infrastructure

P.L. 98-322, § 104(c)	P.L. 100-547, § 201(d)	P.L. 100-668, §§ 102 & 302	P.L. 101-628, § 101(a)(20)
P.L. 103-433, § 102(1)	P.L. 106-156, § 2(d)	P.L. 109-382, § 213(c)	P.L. 110-229, § 101(b)(5)
P.L. 111-11, M, § 1902(1)(B)			

Access for Fish and Wildlife Management Activities

P.L. 98-550, § 201(a)(11)	P.L. 101-628 H.Rept 101-405, App. B	P.L. 102-301, § 3(c)	P.L. 103-433, § 103(f)
P.L. 107-282, § 208	P.L. 108-424, § 209	P.L. 109-362, § 4(j)(1)	P.L. 109-382, § 213(b)
P.L. 109-432, § 329	P.L. 111-11, F, § 1503(b)(8)	P.L. 111-11, K, § 1803(i)(1)	P.L. 111-11, O, § 1972(b)

Low-Level Military Overflights

P.L. 101-195, § 11	P.L. 101-628, §§ 101(h) & 301(f)	P.L. 103-433, § 802	P.L. 107-282, § 205(a)
P.L. 107-370, § 5	P.L. 108-424, § 206	P.L. 109-362, § 4(h)	P.L. 109-432, § 326
P.L. 111-11, F, § 1503(b)(11)	P.L. 111-11, K, § 1803(g)	P.L. 111-11, L, § 1853(d)(7)	P.L. 111-11, O, § 1972(b)(5)

Access for Mineral Activities

P.L. 88-577, §§ 4(d)(2) & (3)	P.L. 95-237, § 4(g)	P.L. 96-312, § 5(d)	P.L. 98-425, § 110
P.L. 98-428, § 304	P.L. 103-433, § 106	P.L. 104-333, § 1022(a)(4)	P.L. 106-456, § 3(a)

Access for Other Specific Activities

Commercial Activities

P.L. 88-577, § 4(d)(6)	P.L. 96-312, § 7(a)(3)	P.L. 111-11, A, § 1001(c)	P.L. 111-11, F, § 1503(b)(6)
P.L. 111-11, K, § 1803(j) & (k)	P.L. 111-11, M, § 1903(e)		

Cemeteries

P.L. 97-384, § 3	P.L. 101-633, § 9

Rights-of-Way

P.L. 95-249, § 4	P.L. 98-425, § 101(a)(24)	P.L. 103-433, § 102(13)

Tribal Uses

P.L. 107-282, § 206	P.L. 108-424, § 207	P.L. 109-362, § 4(k)	P.L. 109-432, § 327
P.L. 111-11, L, § 1853(d)(6)	P.L. 111-11, O, § 1972(b)(7)		

Appendix B. Individual Statutes

This is a chronological list of statutes, or titles or subtitles within a statute, that designate wilderness areas, including the management provisions and any exceptions to general wilderness management for particular areas.[22] Be aware that, except for the Wilderness Act itself, these wilderness statutes are generally not codified; a collected set of the statutes can be found at http://www.wilderness.net/index.cfm?fuse=docmap.

P.L. 88-577—the Wilderness Act

§ 2—defines wilderness and identifies the purpose of wilderness designation as protecting "undeveloped Federal land retaining its primeval character and influence, without permanent improvements or human habitation, which is protected and managed so as to preserve its natural conditions."

§ 3(a)—designates "all areas within the national forests classified … as 'wilderness', 'wild', or 'canoe' … as wilderness areas," establishing 54 new USFS wilderness areas totaling 9,139,721 acres in 13 states.

§ 3(b)—directs the Secretary of Agriculture, "within ten years after the enactment" to review "as to its suitability or nonsuitablity for preservation as wilderness, each area … classified … as 'primitive.'" Recommendations from the President are to be presented within three years for at least 1/3 of the primitive areas and within seven years for at least 2/3 of the primitive areas. Directs management of the primitive areas to continue under existing rules and regulations.

§ 3(c)—directs the Secretary of the Interior to review "every roadless area of five thousand contiguous acres or more in the national parks, monuments and other units of the national park system and every such area of, and every roadless island within, the national wildlife refuges and game ranges." Recommendations from the President are to be presented within three years for at least 1/3 of the areas reviewed and within seven years for at least 2/3 of the areas reviewed.

§ 4(c)—"except as specifically provided for in this Act, and subject to existing private rights, there shall be no commercial enterprise and no permanent road within any wilderness area … and, except as necessary to meet minimum requirements for the administration of the area … (including measures required in emergencies involving the health and safety of persons within the area), there shall be no temporary road, no use of motor vehicles, motorized equipment or motorboats, no landing of aircraft, no other form or mechanical transport, and no structure or installation within any such area."

§ 4(d)(1)—"the use of aircraft or motorboats, where these uses have already become established, may be permitted to continue subject to such restrictions as the Secretary … deems desirable."

§ 4(d)(1)—"such measures may be taken as may be necessary in the control of fire, insects, and diseases, subject to such conditions as the Secretary deems desirable."

[22] Statutes with only minor boundary adjustments have been excluded. A few additional substantive bills that do not designate wilderness areas, such as wilderness study bills and wilderness area management legislation, have been included.

§ 4(d)(2)—"nothing in this Act shall prevent … any activity, including prospecting, for the purpose of gathering information about mineral or other resources, if such activity is carried on in a manner compatible with the preservation of the wilderness environment."

§ 4(d)(3)—"notwithstanding any other provisions of this Act, until midnight December 31, 1983, the United States mining laws and all laws pertaining to mineral leasing shall, to the same extent as applicable prior to the effective date of this Act, extend to … [each] 'wilderness area'; subject, however, to such reasonable regulations … as may be prescribed … consistent with the use of the land for mineral location and development. … Mineral leases, permits, and licenses … shall contain such reasonable stipulations as may be prescribed … for the protection of the wilderness character of the land consistent with the [lease, permit, or license]. Subject to valid rights then existing, effective January 1, 1984, the minerals in … wilderness areas are withdrawn from all forms of appropriation under the mining laws and from disposition under all laws pertaining to mineral leasing."

§ 4(d)(4)(1)—"the President may, within a specific area and in accordance with such regulations as he may deem desirable, authorize prospecting for water resources, the establishment and maintenance of reservoirs, water-conservation works, power projects, transmission lines, and other facilities needed in the public interest, including the road construction and maintenance essential to development and use thereof."

§ 4(d)(4)(2)—"the grazing of livestock, where established prior to the effective date of this Act, shall be permitted to continue subject to such reasonable regulations as are deemed necessary."

§ 4(d)(5)—"nothing in this Act shall preclude the continuance within the [Boundary Waters Canoe] area of any already established use of motorboats."

§ 4(d)(6)—"commercial services may be performed within the wilderness areas … to the extent necessary for activities which are proper for realizing the recreational or other wilderness purposes."

§ 4(d)(7)—"nothing in this Act shall constitute an express or implied claim or denial on the part of the Federal Government as an exemption from State water laws."

§ 4(d)(8)—"nothing in this Act shall be construed as affecting the jurisdiction or responsibilities of the several States with respect to wildlife and fish."

§ 5(a)—"in any case where State-owned or privately owned land is completely surrounded by … wilderness, such State or private owner shall be given such rights as may be necessary to assure adequate access … or the … land shall be exchanged for federally owned land in the same State of approximately equal value."

§ 5(b)—"in any case where valid mining claims or other valid occupancies are wholly within a designated … wilderness area, the Secretary … shall, by reasonable regulations consistent with the preservation of the area as wilderness, permit ingress and egress to such surrounded areas by means which have been or are being customarily enjoyed with respect to other such areas similarly situated."

§ 5(c)—"the Secretary is authorized to acquire privately owned land within the perimeter of any … wilderness if (1) the owner concurs in such acquisition or (2) the acquisition is specifically authorized by Congress."

P.L. 90-271—San Raphael Wilderness

§ 1—designates one new USFS wilderness area with 143,000 acres in California.

§ 3—directs management in accordance with the provisions of the Wilderness Act.

P.L. 90-318—San Gabriel Wilderness

§ 1—designates one new USFS wilderness area with 36,000 acres in California.

§ 3—directs management in accordance with the provisions of the Wilderness Act.

P.L. 90-532—Great Swamp Wilderness

§ 1—designates one new FWS wilderness area with 3,750 acres in New Jersey.

§ 3—"except as necessary to meet minimum requirements … (including measures required in emergencies involving the health and safety of persons within the area), there shall be no commercial enterprise, no temporary or permanent roads, no use of motor vehicles, motorized equipment or motorboats, no landing of aircraft, no other form of motorized transport, and no structure or installation within the area."

P.L. 90-544—North Cascades National Park, Recreation, and Wilderness Areas, Title VI

§ 601(a)—designates one new USFS wilderness area (with about 500,000 acres) in Washington.

§ 602—designates one USFS wilderness area addition (with about 10,000 acres) in Washington.

§ 604—requires a review of the wilderness potential of "the area within the North Cascades National Park" and recommendations to the President within two years.

P.L. 90-548—Mount Jefferson Wilderness

§ 1—designates one new USFS wilderness area with "approximately 100,000 acres" in Oregon.

§ 3—directs management in accordance with the provisions of the Wilderness Act.

P.L. 91-58—Ventana Wilderness

§ 1—designates one new USFS wilderness area with 98,000 acres in California.

§ 3—directs management in accordance with the provisions of the Wilderness Act.

P.L. 91-82—Desolation Wilderness

§ 1—designates one new USFS wilderness area with 63,000 acres in California.

§ 3—directs management in accordance with the provisions of the Wilderness Act. "Owners and operators of existing federally licensed hydroelectric facilities shall have the right of reasonable access to the areas for purposes of operating and maintaining such facilities in a manner that is consistent with past practices without prior approval of the Secretary."

P.L. 91-504—to designate wilderness areas

§ 1—designates 20 new FWS wilderness areas totaling 99,025 acres in 10 states.

§ 2—designates two new NPS wilderness areas totaling 93,503 acres in two states.

§ 3—designates one new USFS wilderness area with 7,000 acres in one state.

§ 5—directs management in accordance with the provisions of the Wilderness Act.

P.L. 92-230—Pine Mountain Wilderness

§ 1—designates one new USFS wilderness area with 19,700 acres in Arizona.

§ 3—directs management in accordance with the provisions of the Wilderness Act.

P.L. 92-241—Sycamore Canyon Wilderness

§ 1—designates one new USFS wilderness area with 48,500 acres in Arizona.

§ 3—directs management in accordance with the provisions of the Wilderness Act.

P.L. 92-364—Cedar Keys Wilderness

§ 1—designates one new FWS wilderness area in Florida.

§ 3—directs management in accordance with the provisions of the Wilderness Act.

P.L. 92-395—Scapegoat Wilderness

§ 1—designates one new USFS wilderness area with 240,000 acres in Montana.

§ 3—directs management in accordance with the provisions of the Wilderness Act.

P.L. 92-400—Sawtooth National Recreation Area and Wilderness

§ 1(b)—designates one new USFS wilderness area in Idaho.

§ 2(b)—directs management in accordance with the provisions of the Wilderness Act.

§ 5—requires a review of the wilderness suitability of "the undeveloped and unimproved portion" of the recreation area.

P.L. 92-476—Washakie Wilderness

§ 1—designates one new USFS wilderness area with 208,000 acres in Wyoming.

§ 5—designates a special management area; requires a study of the wilderness potential of that area and recommendations within five years.

P.L. 92-493—Lava Beds Wilderness

§ 1—designates one new NPS wilderness area with 28,460 acres in California.

§ 3—directs management in accordance with the provisions of the Wilderness Act.

P.L. 92-510—Lassen Volcanic Wilderness

§ 1—designates one new NPS wilderness area with 78,982 acres in California.

§ 3—directs management in accordance with the provisions of the Wilderness Act.

P.L. 92-521—Eagle Cap Wilderness Addition

§ 1—designates additions to one USFS wilderness area with 72,420 acres in Oregon.

§ 3—directs management in accordance with the provisions of the Wilderness Act.

§ 4—designates one USFS wilderness study area with 32,000 acres in Oregon, with recommendations within five years.

P.L. 92-528—Indian Peaks Wilderness Study

§ 1(a)—designates one USFS wilderness study area with 71,000 acres in Colorado.

P.L. 93-429—Okefenokee Wilderness

§ 1—designates one new FWS wilderness area with 343,850 acres in Georgia.

§ 2—"subject to such restrictions as the Secretary deems necessary for public safety and to protect flora and fauna, (1) the use of powered watercraft, propelled by motors of ten or less horsepower, will be permitted, (2) watercraft trails … will be maintained." Authorizes access to the watercraft trails from four specific entry points.

§ 3—authorizes fishing, and allows zones and periods of no fishing "for reasons of public safety, administration, fish and wildlife management, or public use and enjoyment."

§ 5—directs management in accordance with the provisions of the Wilderness Act.

P.L. 93-550—Farallon Wilderness

§ 101—designates one new FWS wilderness area with 141 acres in California.

§ 102—directs management in accordance with the provisions of the Wilderness Act.

P.L. 93-622—the Eastern Wilderness Act

§ 3—designates 16 new USFS wilderness areas totaling 206,988 acres in 13 states.

§ 4(b)—designates 17 USFS wilderness study areas totaling 125,000 acres in nine states.

§ 4(c)—requires a review of the study areas and recommendations to Congress within five years.

§ 6(a)—directs management of the wilderness areas in accordance with the provisions of the Wilderness Act. Directs management of the study areas "to maintain their presently existing wilderness character and potential … until Congress has determined otherwise, except that such management requirement shall in no case extend beyond the expiration of the third succeeding Congress from the date of submission to Congress of the President's recommendations."

§ 6(b)(1)—"the Secretary may acquire by purchase with donated or appropriated funds, by gift, exchange, condemnation, or otherwise, such lands, waters, or interests therein as he determines necessary or desirable."

§ 6(b)(3)—"the authority of the Secretary … to condemn any private land or interest therein … shall not be invoked so long as the owner or owners of such land or interest holds and uses it in the same manner and for those purposes for which such land or interest was held on the date of the designation …: *Provided, however*, That the Secretary … may acquire such land or interest without consent … whenever he finds such use to be incompatible with the management of such area as wilderness and the owner or owners manifest unwillingness, and subsequently fail, to promptly discontinue such incompatible use."

§ 6(b)(4)—requires 60 days notice of any ownership transfer for inholdings.

§ 6(b)(5)—requires 60 days notice for inholdings of "any change in the use … which will result in any significant new construction or disturbance of land surface or flora or will require the use of motor vehicles and other forms of mechanized transport or motorized equipment (except as otherwise authorized by law for ingress or egress or for existing agricultural activities begun before the date of the designation other than timber cutting)."

§ 6(b)(7)—as a condition of transfer, owners may "retain for themselves and their successors or assigns a right of use and occupancy of the property for such noncommercial residential purpose or agricultural activity for twenty-five years."

§ 6(b)(8)—"a right of use or occupancy retained … may be terminated with respect to the entire property by the Secretary … upon his determination that the property or any portion thereof has ceased to be used for such noncommercial residential purpose or agricultural activity."

P.L. 93-632—to designate wilderness areas

§ 1—designates 13 new FWS wilderness areas totaling 116,006 acres in 10 states.

§ 2—designates four new USFS wilderness areas totaling 604,500 acres in three states.

§ 5—directs management in accordance with the provisions of the Wilderness Act.

P.L. 94-146—Flat Tops Wilderness

§ 1—designates one new USFS wilderness area with 235,230 acres in Colorado.

§ 3—directs management in accordance with the provisions of the Wilderness Act.

P.L. 94-199—Hells Canyon National Recreation Area & Wilderness

§ 2(a)—designates one new USFS wilderness area in Idaho and Oregon.

§ 2(b)—directs management in accordance with the provisions of the Wilderness Act.

§ 8(d)—requires a review of the wilderness suitability of three specified areas and recommendations within five years. Directs management of the areas "so as not to preclude their possible future designation by the Congress as wilderness."

P.L. 94-268—wilderness boundary adjustment

§ 1—reduces one USFS wilderness area with 6,500 acres in Vermont (designated in P.L. 93-622, § 3(a)(10)) by deleting the area (§ 1(a)) and then designating a new area of 3,775 acres (§ 1(b)(2)).

§ 1(b)(1)—redesignates one USFS wilderness area in Georgia and Tennessee, with the same acreage as enacted in § 3(b) of P.L. 93-622.

P.L. 94-352—Eagles Nest Wilderness

§ 1—designates one new USFS wilderness area with 133,900 acres in Colorado.

§ 3—directs management in accordance with the provisions of the Wilderness Act.

P.L. 94-357—the Alpine Lakes Area Management Act of 1976

§ 3(a)—designates one new USFS wilderness area and one USFS "Intended Wilderness" in Washington.

§ 3(c)—directs management the wilderness areas in accordance with the provisions of the Wilderness Act.

§ 3(d) & (e)—adds the "Intended Wilderness" after acquisition of "the adjacent non-Federal lands, interests or other property."

P.L. 94-544—Point Reyes Wilderness

§ 1—designates one new NPS wilderness area with 25,370 acres and one potential NPS wilderness addition of 8,003 acres in California.

§ 3—directs management of the wilderness area in accordance with the provisions of the Wilderness Act.

P.L. 94-557—to designate wilderness areas

§ 1—designates 16 new FWS wilderness areas totaling 155,156 acres in 11 states.

§ 2—designates three new USFS wilderness areas totaling 232,415 acres in three states.

§ 3(b)—designates eight USFS wilderness study areas totaling 587,364 acres in three states. Requires a review and recommendations to Congress within 19 months (one area), two years (three areas), or five years (four areas).

§ 3(d)—directs management of the study areas "subject to valid existing rights, … until Congress has determined otherwise, … to maintain their presently existing wilderness character and potential …, except that such management requirement shall in no case extend beyond a period of four years from the date of submission to Congress of the President's recommendation. … Already established uses may be permitted to continue, subject to such restrictions as the Secretary of Agriculture deems desirable, in the manner and degree which the same was being conducted on the date of enactment."

§ 6—directs management of the wilderness areas in accordance with the provisions of the Wilderness Act.

P.L. 94-567—to designate wilderness areas

§ 1—designates 13 new NPS wilderness areas totaling 919,268 acres in eight states and eight potential NPS wilderness area additions totaling 53,506 acres in six states.[23]

§ 3—adds the potential wilderness "upon publication in the Federal Register of a notice by the Secretary of the Interior that all uses thereon prohibited by the Wilderness Act have ceased."

§ 6—directs management of wilderness areas in accordance with the provisions of the Wilderness Act.

[23] This repeats the designation of one NPS wilderness area with 25,370 acres and one potential wilderness addition with 8,003 acres in California designated in P.L. 94-544.

§ 8—deletes 6,497 acres from one USFS wilderness area in Wyoming; designates it as a primitive area and requires a review of its wilderness potential.

P.L. 94-579—the Federal Land Policy and Management Act of 1976

§ 603(a)—requires a review of the wilderness potential of "those roadless areas of five thousand acres or more and roadless islands of the public lands" (defined in § 103(e) as lands administered by the BLM).

§ 603(c)—directs management of those identified wilderness study areas (WSAs) "until Congress has determined otherwise, … in a manner so as not to impair the suitability of such areas for preservation as wilderness, subject, however, to the continuation of existing mining and grazing uses and mineral leasing in the manner and degree in which the same were being conducted" prior to their identification as WSAs.

P.L. 95-150—the Montana Wilderness Study Act of 1977

§ 2(a)—designates nine USFS wilderness study areas totaling 973,000 acres in Montana.

§ 2(b)—requires a review and recommendations to Congress within seven years.

§ 3(a)—directs management of the study areas "subject to existing private rights, … until Congress determines otherwise, … to maintain their presently existing wilderness character."

§ 3(b)—states that the statute is to have no effect on state jurisdiction over or responsibilities for fish and wildlife.

P.L. 95-237—the Endangered American Wilderness Act of 1978

§ 2—designates 10 new USFS wilderness areas and one USFS wilderness area addition totaling 710,267 acres in seven states.

§ 2(c)—"to guarantee the continued viability of the Santa Lucia watershed and to insure the continued health and safety of the communities serviced by such watershed, the management plan for the Santa Lucia area to be prepared following designation as wilderness shall authorize the Forest Service to take whatever appropriate actions are necessary for fire prevention and watershed protection including, but not limited to, acceptable fire presuppression and fire suppression measures and techniques."

§ 2(e)—establishes "no right, or claim of right, to the diversion and use of the waters of Hunter Creek, the Fryingpan or Roaring Fork Rivers, or any tributaries of said creed or rivers, by the Fryingpan-Arkansas Project … shall be prejudiced, expanded, diminished, altered, or affected by this Act. Nothing in this Act shall be construed to expand, abate, impair, impede, or interfere with the construction, maintenance, or repair of said Fryingpan-Arkansas Project facilities, not the operation thereof."

§ 2(i)—authorizes "whatever sanitary facilities are necessary (including but not limited to vault toilets, which may require service by helicopter) to insure the continued health and safety of the

communities serviced by the Lone Peak watershed; furthermore, nothing in this Act shall be construed to limit motorized access and road maintenance by local municipalities for those minimum maintenance activities necessary to guarantee the continued viability of whatsoever watershed facilities currently exist, or which may be necessary in the future to prevent the degradation of the water supply in the Lone Peak area."

§ 3—**Oregon Omnibus Wilderness Act of 1978**.

Designates two new USFS wilderness areas and three USFS wilderness area additions totaling 387,100 acres in Oregon.

§ 4—**Gospel-Hump Area**.

§ 4(a)(1)—designates one new USFS wilderness area with 206,000 acres in Idaho.

§ 4(g)—provides that "nothing in this Act shall prevent within the Gospel-Hump Wilderness Area any activity, including prospecting, for the purpose of gathering information about mineral or other resources, if such activity is carried on in a manner compatible with the preservation of the wilderness environment."

§ 5—directs management in accordance with the provisions of the Wilderness Act, subject to valid existing rights.

P.L. 95-249—Absaroka-Beartooth Wilderness

§ 1—designates one new USFS wilderness area with 904,500 acres in Montana.

§ 3—directs management in accordance with the provisions of the Wilderness Act.

§ 4—states that the statute is to have no effect on any claim by two counties to a specific right-of-way.

P.L. 95-450—the Indian Peaks Wilderness Area, the Arapaho National Recreation Area and the Oregon Islands Wilderness Area Act

§ 3(a)—designates one new USFS wilderness area with 70,000 acres in Colorado.

§ 3(b)—directs management in accordance with the provisions of the Wilderness Act.

§ 12(a)—designates one new FWS wilderness areas with 459 acres in Oregon.

§ 12(b)—directs management in accordance with the provisions of the Wilderness Act.

P.L. 95-494—Wisconsin Wilderness

§ 1—designates two new USFS wilderness areas totaling 13,201 acres in Wisconsin.

§ 3—directs management in accordance with the provisions of the Wilderness Act.

P.L. 95-495—Boundary Waters Canoe Area Wilderness

§ 3—designates one new USFS wilderness area with 1,075,500 acres in Minnesota.

§ 4(a)—directs management in accordance with the provisions of the Wilderness Act.

§§ 4(c) & (d)—identify lakes where the use of motors up to the specified horsepower are permitted and allow mechanized portages in specified areas.

§ 4(e)—allows use of snowmobiles, within limited sizes, in specified areas.

§ 4(f)—specifies entry point quotas for motorboats on the authorized lands.

§ 4(g)—permits continued motor vehicle assistance in certain portages until January 1, 1984, and thereafter if "there is no feasible nonmotorized means of transporting boats across the portages."

§ 4(h)—limits all motorized uses to "those types of snowmobiles, motorboats, and vehicles which have been in regular use" prior to enactment.

§ 4(i)—prohibits motorized use except as specified and for emergencies and administration.

§ 8—incorporates the "provisions of Executive Order 10092" concerning an existing airspace reservation.

§ 11(a)—withdraws the area from mining and mineral exploration.

§ 13—permits the maintenance of a particular dam and of "other existing water control structures only where … necessary to protect wilderness values or public safety."

§ 14—directs that state jurisdiction over or responsibilities for fish and wildlife are unaffected.

§ 15—states that the statute is to have no effect on state jurisdiction over or responsibilities for waters, "except to the extent that the exercise of such jurisdiction is less stringent that the Secretary's regulations." Requires that "any regulations … be complementary to, and not in derogation of regulations issued by the United States Coast Guard."

§ 16(a)—requires cooperation with the state "and any political subdivisions thereof."

§ 17—states that the statute is to have no effect on any treaty.

§ 18—authorizes and directs the Secretary "to expedite and intensify the program of dispersed outdoor recreation development, … [including] additional snowmobile trails, … remote campsites, … lack access and parking facilities, [and] … a system of new hiking, backpacking, and cross-country ski trails."

§ 19(b)—authorizes grants for "educational and technical assistance to businesses and communities adjacent … to improve economic opportunities for tourism and recreation-related businesses in a manner which is complementary to the management of the wilderness."

P.L. 95-546—Great Bear Wilderness

§ 1—designates one new USFS wilderness area with 285,771 acres and one USFS wilderness addition with 60,000 acres in Montana.

§ 3—directs management in accordance with the provisions of the Wilderness Act.

P.L. 95-625—the National Parks and Recreation Act of 1978, Title IV

§ 401—designates eight new NPS wilderness areas totaling 1,854,395 acres in eight states and six potential NPS wilderness area additions totaling 94,139 acres in six states.

§ 403—adds the potential wilderness "upon publication in the Federal Register of a notice by the Secretary that all uses thereon prohibited by the Wilderness Act have ceased." Directs management "insofar as practicable as wilderness."

§ 404—directs management in accordance with the provisions of the Wilderness Act.

P.L. 96-248—Sandia Mountain Wilderness Addition

§ 1—expands one USFS wilderness area in New Mexico and withdraws the additional area from the mining and mineral leasing laws.

P.L. 96-312—the Central Idaho Wilderness Act of 1980

§ 3—designates one new USFS wilderness area with 2,239,000 acres in Idaho.

§ 4—designates one USFS wilderness area addition with 105,600 acres in Idaho.

§ 5(a)—requires "a comprehensive wilderness management plan" within three years.

§ 5(c)—directs management in accordance with the provisions of the Wilderness Act, subject to valid existing rights.

§ 5(d)(1)—establishes within the wilderness area the "Special Mining Management Zone—Clear Creek," and directs that "all prospecting and exploration for, and development or mining of cobalt and associated minerals shall be considered a dominant use of such lands."

§ 5(d)(1)(A)—"all mining locations and associated access roads shall be held and used solely for mining and minerals processing operations and uses reasonably incident thereto," except that the state may use the access roads "to facilitate the management of the bighorn sheep" in the zone.

§ 5(d)(1)(B)—directs that mining law patents convey title only to the minerals; provides "the right to cut and use as much of the mature timber therefrom as may be needed in the extraction, removal and beneficiation of the mineral deposits, if such needed timber is not otherwise reasonably available, and if such timber is cut under sound principles of forest management;" and provides the patentee "the right to use as much of the surface as reasonably necessary for the mining, removal, extraction, of beneficiation of the mineral deposits."

§ 5(d)(1)(C)—requires "all reasonable measures to see that the mining or processing of cobalt … does not significantly impair the overall habitat of bighorn sheep."

§ 7(a)(1)—allows "the landing of aircraft, where this use has become established prior to the date of enactment … to continue subject to such restrictions as the Secretary deems desirable." Prohibits the Secretary from acting to "permanently close or render unserviceable any aircraft landing strip in regular use … for reasons other than extreme danger to aircraft."

§ 7(a)(2)—allows continued livestock grazing where "established before the date of enactment … subject to such reasonable regulations as the Secretary deems necessary" in accordance with the Wilderness Act.

§ 7(a)(3)—authorizes "commercial services … to the extent necessary for activities which are proper for realizing the recreational or other wilderness purposes."

§ 7(a)(4)—authorizes "future construction and maintenance of small hydroelectric generators, domestic water facilities, and related facilities" in two drainages.

§ 7(b)—provides that nothing "shall constitute an express or implied claim or denial on the part of the Federal Government as to exemption from State water laws."

§ 7(c)—directs that state jurisdiction over and responsibilities for fish and wildlife are unaffected.

P.L. 96-476—the Rattlesnake National Recreation Area and Wilderness Act of 1980

§ 2(a)—designates one new USFS wilderness area with 33,000 acres in Montana.

§ 2(b)—directs management in accordance with the provisions of the Wilderness Act, subject to valid existing rights.

P.L. 96-487—the Alaska National Interest Lands Conservation Act

§ 701—designates eight new NPS wilderness areas totaling 32,355,000 acres in Alaska.

§ 702—designates eight new FWS wilderness areas totaling 18,560,000 acres in Alaska.

§ 703(a)—designates 14 new USFS wilderness areas totaling 5,761,499 acres in Alaska.

§ 703(b)—allows continued use of existing mechanized portage equipment at one site.

§ 704—designates one USFS wilderness study area in Alaska, with recommendations within three years.

§ 707—directs management of the wilderness areas in accordance with the Wilderness Act.

§ 708—provides statewide USFS release language, except for the area identified in § 704.

P.L. 96-550—New Mexico Wilderness

§ 102(a)—designates eight new USFS wilderness areas and four USFS wilderness area additions totaling 609,060 acres in New Mexico.

§ 102(a)(5)—states that the statute is to have no effect on additional fencing or grazing levels in one unit.

§ 102(a)(9)—states that the statute is to have no effect on "the management of, or rules, regulations and law applying to the Santa Fe Municipal Watershed" in one unit.

§ 102(d)—directs management in accordance with the provisions of the Wilderness Act, subject to valid existing rights.

§ 103—designates six USFS wilderness study areas with 117,530 acres in New Mexico, with recommendations by January 1, 1986. Directs management of the areas "until Congress determines otherwise … so as to maintain their presently existing wilderness character … [but] current levels of motorized and other uses shall be permitted to continue such to … reasonable rules and regulations."

§ 104—provides statewide USFS release language, except for the area identified in § 103.

§ 105—states that the statute creates no buffer zone.

P.L. 96-560—Colorado Wilderness

§ 102(a)—designates 14 new USFS wilderness areas and six USFS wilderness area additions totaling 1,423,130 acres in Colorado.

§ 102(a)(5)—establishes "no right, or claim of right, to the diversion and use of existing conditional water rights for the Homestake Water Development project by the cities of Aurora and Colorado Springs shall be prejudiced, expanded, diminished, altered, or affected by this Act. Nothing in this Act shall be construed to expand, abate, impair, impede, or interfere with the construction, maintenance or repair of said project, not the operation thereof."

§ 102(a)(17)—allows "motorized access and the use of motorized equipment used for the periodic maintenance and repair of the McGuire Water Transmission Line ditch."

§ 103—designates one new USFS wilderness area with 10,700 acres in South Dakota; "the provisions of the Act designating the Custer State Park Sanctuary … shall also apply … to the extent they are not inconsistent with the provisions of the Wilderness Act."

§ 104(b)—directs management in accordance with the provisions of the Wilderness Act, subject to valid existing rights.

§ 105(a)—designates nine USFS wilderness study areas totaling 477,400 acres in Colorado, with recommendations within three years.

§ 105(b)—designates one joint USFS-BLM study of 14,000 acres in Colorado, with recommendations within three years. The study must consider a range of values, several possible

land designations (including wilderness), the effect of various options on local and national economic activities, and access to the area.

§ 105(c)—directs management of the study areas "to maintain their presently existing wilderness character and potential" until Congress determines otherwise, but "grazing of livestock and oil, gas, or mineral exploration and development activities" shall be administered under laws generally applicable to USFS lands.

§ 106(a)—designates one additional USFS wilderness study area with 5,500 acres in Colorado, with recommendations within three years.

§ 106(b)—directs management of the study areas "to maintain their presently existing wilderness character and potential" for up to "two years from the date of submission" of the recommendation, with "oil, gas, or mineral exploration and development operations" permitted under the terms of the Wilderness Act.

§ 107—provides statewide USFS release language, except for areas identified in §§ 105 & 106.

§ 108—"declares that … [for] livestock grazing in National Forest wilderness areas, the provisions of the Wilderness Act shall be … administered in accordance with the guidelines contained" in H.Rept. 96-617.

§ 109—requires a review of "all practices, policies, and regulations … regarding disease or insect outbreaks, forest fires, and the use of modern suppression methods and equipment … to insure that—(a) such policies, practices, and regulations fully conform with and implement the intent of Congress" as expressed in the Wilderness Act, "and (b) policies, practices, and regulations are developed that will allow timely and efficient fire, insect, and disease control, to provide, to the extent reasonably practicable, adequate protection of adjacent [lands]."

§ 110—states that the statute creates no buffer zone.

§ 201—designates nine new USFS wilderness areas with 50,070 acres in three states.

§ 203—directs management in accordance with the provisions of the Wilderness Act, subject to valid existing rights.

H. Rept. 96-617 to accompany H.R. 5487 (P.L. 96-560)—Grazing in National Forest Wilderness Areas

Pages 10-13 of the report express the Committee's concern that the intent of the Wilderness Act language authorizing continued livestock grazing in wilderness was not being implemented appropriately. The Committee "declined to amend section 4(d)(4)(2) of the Wilderness Act, opting instead for a reaffirmation of the … language in section 5 of H.R. 5487 and for the following nationwide guidelines and specific statements of legislative policy." The report includes five guidelines:

1. Do not curtail or "phase-out" grazing simply because the area has been designated wilderness.

2. Allow maintenance of supporting facilities, including with motorized equipment when necessary.

3. Require "natural materials" to replace or reconstruct deteriorated facilities only if it would impose unreasonable additional costs.

4. Allow replacements or new improvements if primarily for resource protection.

5. Allow use of motorized equipment for emergencies.

P.L. 96-585—Otis Pike Fire Island High Dune Wilderness

§ 1(a)—designates one new NPS wilderness area with 1,363 acres in New York.

§ 1(d)—provides that the designation "shall not preclude the repair of breaches that occur in the wilderness area, in order to prevent loss of life, flooding, and other severe economic and physical damage to the Great South Bay and surrounding areas."

P.L. 97-211—Florida Keys Wilderness Addition

§ 1—adds 73 acres to an existing FWS wilderness in Florida after the lands have been added to the National Wildlife Refuge System.

§ 2—deletes 25 acres (one island) from the FWS wilderness in Florida.

§ 4—directs management in accordance with the Wilderness Act, subject to valid existing rights.

P.L. 97-250—Cumberland Island Wilderness

§ 2(a)—designates one new NPS wilderness area with 8,840 acres in Georgia. Also designates potential NPS wilderness with 11,718 acres, to be added (in whole or piecemeal) when the Secretary publishes a *Federal Register* notice that uses prohibited by the Wilderness Act have ceased.

§ 2(c)—directs management in accordance with the Wilderness Act, subject to valid existing rights.

P.L. 97-384—Charles C. Deam Wilderness

§ 1—designates one new USFS wilderness area with 12,953 acres in Indiana.

§ 2—directs management in accordance with the Wilderness Act, subject to valid existing rights.

§ 3—states that the statute is to have no effect on "the right of public access to cemeteries" and access to privately owned lands surrounded by wilderness, in accordance with the Wilderness Act.

§ 4—provides statewide USFS release language.

P.L. 97-407—Paddy Creek Wilderness

§ 2—designates one new USFS wilderness area with 6,888 acres in Missouri.

§ 4—directs management in accordance with the Wilderness Act, subject to valid existing rights.

§ 5—provides statewide USFS release language.

P.L. 97-411—Cheaha Wilderness

§ 2(a)—designates one new USFS wilderness area with 6,780 acres in Alabama.

§ 2(b)—directs management in accordance with the Wilderness Act, subject to valid existing rights.

P.L. 97-466—Monongahela Wilderness

§ 1—designates three new USFS wilderness areas totaling 47,800 acres in West Virginia.

§ 3—directs management in accordance with the Wilderness Act, subject to valid existing rights.

§ 4—requires acquisition of "all nonfederally owned coal deposits and other mineral interests and rights" in exchange for credit that can be used for federal coal leases elsewhere.

§ 5—provides statewide USFS release language.

P.L. 98-140—the Lee Metcalf Wilderness and Management Act of 1983

§ 2(a)—designates one new USFS/BLM wilderness area with 259,000 acres in Montana.

§ 2(b)—directs management in accordance with the Wilderness Act, subject to valid existing rights.

§ 3(a)-(c)—provides USFS and BLM release language for specified areas.

§ 3(d)—revises the boundary of one USFS wilderness area in Montana, deleting 67 acres.

§ 3(e)—revises the boundary of one FWS wilderness area in Montana, deleting 28 acres.

P.L. 98-289—Irish Wilderness

§ 2(a)—designates one new USFS wilderness area with 16,500 acres in Missouri.

§ 2(b)—directs management in accordance with the Wilderness Act, subject to valid existing rights.

P.L. 98-321—the Wisconsin Wilderness Act of 1984

§ 2—designates two new USFS wilderness areas (one with three separate units) totaling 24,339 acres in Wisconsin.

§ 4—directs management in accordance with the Wilderness Act, subject to valid existing rights.

§ 5—provides statewide USFS release language.

P.L. 98-322—the Vermont Wilderness Act of 1984

§ 102—designates four new USFS wilderness areas and one USFS wilderness area addition totaling 41,260 acres in Vermont.

§ 104(a)—directs management in accordance with the Wilderness Act, subject to valid existing rights.

§ 104(b)—directs that state jurisdiction over and responsibilities for fish and wildlife are unaffected.

§ 104(c)—authorizes maintenance of two specific trails, associated trails, and "related structures."

§ 105—provides statewide USFS release language.

P.L. 98-323—the New Hampshire Wilderness Act of 1984

§ 101—designates three new USFS wilderness areas and one USFS wilderness area addition totaling 77,000 acres in New Hampshire.

§ 103—directs management in accordance with the Wilderness Act, subject to valid existing rights.

§ 104—provides statewide USFS release language, except for the area specified in § 104(e).

P.L. 98-324—the North Carolina Wilderness Act of 1984

§ 2—designates nine new USFS wilderness areas and two USFS wilderness area additions totaling 68,750 acres in North Carolina.

§ 4—directs management in accordance with the Wilderness Act, subject to valid existing rights.

§ 5—provides statewide USFS release language, except for the area specified in § 6(a).

§ 6(a)—designates four new USFS wilderness study areas and one USFS wilderness study area addition totaling 25,816 acres in North Carolina.

§ 6(b)—requires recommendations within three years.

§ 6(c)—directs management, subject to valid existing rights, "so as to maintain their presently existing wilderness character" until Congress determines otherwise.

P.L. 98-328—the Oregon Wilderness Act of 1984

§ 3—designates 22 new USFS wilderness areas and seven USFS wilderness area additions totaling 788,700 acres in Oregon.

§ 4(f)—designates one new USFS wilderness area and one USFS wilderness area addition totaling 70,800 acres in Oregon.

§ 5(b)—directs management in accordance with the Wilderness Act, subject to valid existing rights.

§ 6—states that the statute creates no buffer zone.

§ 7—provides statewide USFS release language.

P.L. 98-339—the Washington State Wilderness Act of 1984

§ 3—designates 18 new USFS wilderness areas and two USFS wilderness area additions totaling 898,790 acres in Washington.

§ 3(7)—revises the boundary of one USFS wilderness area in Washington, effectively deleting 800 acres.

§ 4(b)—directs management in accordance with the Wilderness Act, subject to valid existing rights.

§ 5—provides statewide USFS release language.

§ 6(a)—designates one new BLM wilderness area with 7,140 acres in Washington.

§ 6(b)—directs management in accordance with the Wilderness Act, subject to valid existing rights.

§ 9—states that the statute creates no buffer zone.

P.L. 98-406—the Arizona Wilderness Act of 1984

§ 101(a)—designates 26 new USFS wilderness areas and four USFS wilderness area additions totaling 658,540 acres in Arizona.

§ 101(a)(13)—states that the statute is to have no effect on "the installation and maintenance of hydrologic, meteorologic, or telecommunications facilities … or limited motorized access to such facilities when nonmotorized access means are not reasonably available or when time is of the essence, subject to such conditions as the Secretary deems desirable, where such facilities and access are essential to flood warning, flood control, and water reservoir operation purposes."

§ 101(a)(23)—"the governmental agency having jurisdictional authority may authorize limited access to the area, for private and administrative purposes," along a specified route.

§ 101(b)—directs management in accordance with the Wilderness Act, subject to valid existing rights.

§ 101(d)—states that the statute creates no buffer zone.

§ 101(e)(1)—establishes no "express or implied claim or denial on the part of the Federal Government as to exemption from Arizona State water laws."

§ 101(e)(2)—directs that state jurisdiction over and responsibilities for fish and wildlife are unaffected.

§ 101(f)(1)—allows continued livestock grazing "where established before the date of enactment" in accordance with the Wilderness Act and § 108 of P.L. 96-560.

§ 101(f)(2)—requires a review of all grazing management "to insure that such policies, practices, and regulations fully conform with and implement the intent of Congress."

§ 102(a)—designates three USFS wilderness study areas totaling 67,930 acres in Arizona, with recommendations from the President by January 1, 1986.

§ 103—provides statewide USFS release language, except for the areas specified in § 102.

§ 202—designates one new BLM wilderness area with 6,670 acres in Arizona.

§ 203—directs management in accordance with the Wilderness Act, subject to valid existing rights.

§ 301(a)—designates nine new BLM and USFS wilderness areas totaling 397,300 acres in Arizona.

§ 302(a)—directs management in accordance with the Wilderness Act, subject to valid existing rights.

§ 302(b)—allows continued livestock grazing "where established before the date of enactment … subject to such reasonable regulations, policies, and practices as the Secretary concerns deems necessary, as long as such regulations, policies, and practices conform with and implement the intent of Congress regarding grazing in such areas as … expressed in the Wilderness Act."

P.L. 98-425—the California Wilderness Act of 1984

§ 101(a)—designates 24 new USFS wilderness areas and 15 USFS wilderness area additions totaling 1,297,930 acres in California.

§ 101(a)(2)—allows "continued motorized access to those previously existing facilities … [for] permitted livestock grazing activities … in the same manner and degree in which such access was occurring as of the date of enactment."

§ 101(a)(6)—modifies the boundary of one wilderness area, transferring land to another area and directing the fire road between them "to be closed to all motorized vehicles except … for administrative purposes."

§ 101(a)(7)—allows "nonmotorized dispersed recreation to continue at a level not less than the level of use which occurred during calendar year 1979."

§ 101(a)(13)—allows "portions of the existing primitive road between the two wilderness areas … be relocated for environmental protection or for other reasons," with boundary adjustments to the wilderness areas, as needed, "effective upon publication of a notice of such relocation in the Federal Register."

§ 101(a)(24)—allows a right-of-way, pursuant to an application within 10 years of enactment, and authorizes construction of a transmission line. If the power transmission line is constructed, "the corridor shall cease to be a part of" the wilderness, and the Secretary "shall publish a notice thereof in the Federal Register."

§ 101(a)(25)—states that nothing "shall be construed to prejudice, alter, or affect in any way, any rights or claims of right to the diversion and use of waters from the North Fork of the San Joaquin River, or in any way interfere with the construction, maintenance, repair, or operation of a hydroelectric power project." Authorizes "continued motorized access to those previously existing facilities … related to permitted livestock grazing … [and] operation and maintenance of the existing cabin located in" the area "in the same manner and degree in which such access and operation and maintenance … were occurring as of the date of enactment."

§ 102(a)—designates three USFS planning areas (i.e., wilderness study areas) totaling 98,200 acres in California, with recommendations within three years.

§ 102(b)—directs management the planning areas "so as to maintain their presently existing wilderness character and potential" for four years, subject to valid existing rights.

§ 103(a)—directs management USFS wilderness areas in accordance with the Wilderness Act, subject to valid existing rights.

§ 103(b)(1)—allows continued livestock grazing "where established before the date of enactment … subject to such reasonable regulations, policies, and practices as the Secretary deems necessary, as long as such regulations, policies, and practices fully conform with and implement the intent of Congress regarding grazing in such areas as … expressed in the Wilderness Act."

§ 103(b)(2)—authorizes, "as provided in … the Wilderness Act , … such measures as are necessary in the control of fire, insects, and diseases, subject to such conditions as [the Secretary] deems desirable."

§ 103(b)(3)—directs management wilderness areas, "as provided in … the Wilderness Act … to preserve their wilderness character and to devote them to the public purposes of recreational, scenic, scientific, educational, conservation, and historical use."

§ 103(c)—requires "negotiations to acquire by exchange all or part of any privately owned lands within the national forest wilderness areas."

§ 106—designates two new NPS wilderness areas totaling 1,414,580 acres and two potential NPS wilderness additions totaling 3,650 acres in California.

§ 108—adds potential wilderness "upon publication in the Federal Register of a notice … that all uses prohibited by the Wilderness Act have ceased." Directs management "insofar as practicable as wilderness."

§ 109—directs management NPS wilderness areas in accordance with the Wilderness Act.

§ 110—directs "mineral prospecting, exploration, development, and mining of cobalt and associated minerals" in one USFS roadless area proceed under the U.S. mining laws governing nonwilderness lands.

§ 111—provides statewide USFS release language, except for 65 areas listed in § 111(e), pending wilderness recommendations for those areas developed during of preparation of land management plans.

P.L. 98-428—the Utah Wilderness Act of 1984

§ 102—designates 12 new USFS wilderness areas totaling 749,550 acres in Utah.

§ 103(b)—directs management in accordance with the Wilderness Act, subject to valid existing rights.

§ 201—provides statewide USFS release language.

§ 301(a)—allows continued livestock grazing, in accordance with the Wilderness Act and § 108 of P.L. 96-560.

§ 301(b)—requires a review of all grazing management "to insure that such policies, practices, and regulations fully conform with and implement the intent of Congress."

§ 302(a)—establishes no "express or implied claim or denial on the part of the Federal Government as to exemption from Utah water laws."

§ 302(b)—authorizes "whatever sanitary facilities are necessary, including but not limited to vault toilets which may require service by helicopter, to insure the continued health and safety of the communities serviced by the watersheds" for 10 of the wilderness areas. Also allows "motorized access and road maintenance by local municipalities for those minimum maintenance activities necessary to guarantee the continued viability of whatsoever watershed facilities currently exist or which may be necessary in the future to prevent the degradation of the water supply … subject to such reasonable regulations as are deemed necessary."

§ 303—states that the statute creates no buffer zone.

§ 304—requires continued assessments of the mineral potential of the designated areas.

§ 305—authorizes "the installation and maintenance of hydrologic, meteorologic, climatological, or telecommunication facilities … or limited motorized access to such facilities when nonmotorized access means are not reasonably available or when time is of the essence, subject to

such conditions as [are deemed] desirable, where such facilities or access are essential to flood warning, flood control and water reservoir operation."

§ 306(a)(1)—withdraws areas from mining laws and mineral and geothermal leasing laws, except for one area, where competitive CO_2 leases are authorized for bid within five years. Subsection (b) establishes conditions and requirements in the event of development of such leases.

P.L. 98-430—the Florida Wilderness Act of 1983

§ 1—designates six new USFS wilderness areas and one USFS wilderness area addition totaling 49,150 acres in Florida.

§ 1(4)—allows existing motorboat use on one creek.

§ 2(a)—designates two USFS wilderness study areas with 10,900 acres in Florida.

§ 2(b)—directs management of the study areas "so as to maintain their presently existing wilderness character and potential" until Congress determines otherwise, subject to valid existing rights.

§ 4—directs management of the wilderness areas in accordance with the Wilderness Act, subject to valid existing rights.

§ 6—provides statewide USFS release language.

P.L. 98-508—the Arkansas Wilderness Act of 1984

§ 3—designates eight new USFS wilderness areas and one USFS wilderness area addition totaling 91,103 acres in Arkansas.

§ 4—provides statewide USFS release language.

§ 6—directs management in accordance with the Wilderness Act, subject to valid existing rights.

§ 7—states that the statute creates no buffer zone.

P.L. 98-514—the Georgia Wilderness Act of 1984

§ 2—designates two USFS wilderness area additions totaling 14,439 acres in Georgia.

§ 4—directs management in accordance with the Wilderness Act, subject to valid existing rights.

§ 5—provides statewide USFS release language, except for 10 areas totaling 118,000 acres in Georgia.

P.L. 98-515—the Mississippi National Forest Wilderness Act of 1984

§ 2—designates two USFS wilderness areas totaling 5,440 acres in Mississippi.

§ 4—directs management in accordance with the Wilderness Act, subject to valid existing rights.

§ 5—provides statewide USFS release language.

P.L. 98-550—the Wyoming Wilderness Act of 1984

§ 201(a)—designates eight new USFS wilderness areas and five USFS wilderness area additions totaling 884,129 acres in Wyoming.

§ 201(a)(11)—authorizes "occasional motorized access for administrative purposes and related activities … for habitat management, trapping, transporting and proper management of the area's bighorn sheep population."

§ 201(c)—provides that four designated areas shall not affect "any present or future water rights for, and … construction, operation or maintenance of, the State II or Stage III water development projects, … or any subsequent modification thereof … to the extent that such modification provides for the diversion and transportation of water in the Little Snake River Basin for storage or use in said basin or in Wyoming … No term or condition shall be imposed … on the basis of any present or future wilderness" characteristics, designations, or studies in one national forest or in three specified counties.

§ 203—directs management in accordance with the Wilderness Act, subject to valid existing rights.

§ 301(a)—designates three USFS wilderness study areas totaling 180,540 acres in Wyoming.

§ 301(b)—requires recommendations within three years.

§ 301(c)—directs management of the areas, "subject to valid existing rights and reasonable access to exercise such rights, until Congress determines otherwise … to maintain their presently existing wilderness character." Withdraws one area from mining laws, and for that area authorizes "oil and gas exploration and development … under reasonable conditions to protect the environment according to the laws and regulations generally applicable to nonwilderness lands." Allows continued snowmobiling "in the same manner and degree as was occurring prior to the date of enactment."

§ 401—provides statewide USFS release language, except for the area identified in § 5 of P.L. 92-476.

§ 501—requires a review of grazing "to insure that such policies, practices, and regulations fully conform with and implement the intent of Congress" in the Wilderness Act and P.L. 98-406.

§ 502—establishes no "express or implied claim or denial on the part of the Federal Government as to exemption from Wyoming water laws."

§ 503—directs that state jurisdiction over and responsibilities for fish and wildlife are unaffected.

§ 504—states that the statute creates no buffer zone.

§ 505—requires, for all wilderness areas in Wyoming, cooperation with the state "in conducting a cultural resources management program … [for] the protection of archaeological sites and interpretation of such sites for the public benefit and knowledge."

P.L. 98-574—the Texas Wilderness Act of 1984

§ 2—designates five new USFS wilderness areas totaling 34,346 acres in Texas.

§ 4(a)—directs management in accordance with the Wilderness Act, subject to valid existing rights.

§ 4(b)—encourages an expeditious exchange to acquire timber industry land within two of the wilderness areas.

§ 5—provides statewide USFS release language.

P.L. 98-578—the Tennessee Wilderness Act of 1984

§ 2—designates three new USFS wilderness areas totaling 24,942 acres in Tennessee.

§ 4—directs management in accordance with the Wilderness Act, subject to valid existing rights.

§ 5—provides USFS release language for certain counties in Tennessee. (See P.L. 99-490.)

§ 6(a)—designates two USFS wilderness study areas totaling 5,100 acres in Tennessee, to be reviewed in the initial NFMA Cherokee National Forest management plan.

§ 6(b)—directs management of the wilderness study areas, "until Congress determines otherwise … so as to maintain its presently existing wilderness character."

P.L. 98-585—the Pennsylvania Wilderness Act of 1984

§ 4—designates two new USFS wilderness areas totaling 9,705 acres in Pennsylvania.

§ 5(a)—directs management in accordance with the Wilderness Act, subject to valid existing rights.

§ 5(b)—directs that state jurisdiction over and responsibilities for fish and wildlife are unaffected.

§ 8—provides statewide USFS release language.

§ 9—states that the statute creates no buffer zone.

P.L. 98-586—the Virginia Wilderness Act of 1984

§ 2—designates 10 new USFS wilderness areas and one USFS wilderness area addition totaling 55,984 acres in Virginia.

§ 4—directs management in accordance with the Wilderness Act, subject to valid existing rights.

§ 5—provides statewide USFS release language, except for areas in § 6.

§ 6(a)—designates four USFS wilderness study areas totaling 25,075 acres in Virginia.

§ 6(c)—directs management of the areas, "subject to valid existing rights [and] … until Congress determines otherwise … so as to maintain its presently existing wilderness character."

§ 6(d)—requires a study within two years, by the state and the U.S. Environmental Protection Agency, of "the effects of the proposed industrial development site at Covington, Virginia, on air quality off the areas designated for wilderness study."

§ 7—states that the statute creates no buffer zone.

P.L. 98-603—the San Juan Basin Wilderness Protection Act of 1984

§ 102(a)—designates two new BLM wilderness areas totaling 27,840 acres in New Mexico.

§ 102(b)—directs management in accordance with the Wilderness Act, subject to valid existing rights.

§ 102(d)—allows continued livestock grazing "where established before the date of enactment … subject to such reasonable regulations, policies, and practices as the Secretary deems necessary, as long as such regulations, policies, and practices fully conform with and implement the intent of Congress regarding grazing in such areas as … expressed in the Wilderness Act."

§ 109—designates one USFS wilderness area addition with 20 acres in New Mexico; authorizes the "continuance of the existing diversion dam and existing related facilities … including the provision for access and the use of mechanized equipment only for construction and maintenance of existing structures" and allows "upgrading of the existing diversion dam … within four years."

P.L. 99-197—the Kentucky Wilderness Act of 1985

§ 2—designates one new USFS wilderness area with 13,300 acres in Kentucky.

§ 3—directs management in accordance with the Wilderness Act, subject to valid existing rights.

§ 4—provides statewide USFS release language.

P.L. 99-490—the Tennessee Wilderness Act of 1986

§ 2—designates four new USFS wilderness areas and two USFS wilderness area additions totaling 33,735 acres in Tennessee.

§ 4—directs management in accordance with the Wilderness Act, subject to valid existing rights.

§ 5—provides USFS release language for the remaining counties in Tennessee. (See P.L. 98-578.)

P.L. 99-504—the Nebraska Wilderness Act of 1985

§ 101—designates one new USFS wilderness area with 8,100 acres in Nebraska.

§ 102(a)—directs management in accordance with the Wilderness Act, subject to valid existing rights.

§ 102(b)(1)—allows continued livestock grazing, in accordance with the Wilderness Act and § 108 of P.L. 96-560.

§ 102(b)(2)—requires a review of all grazing management "to insure that such policies, practices, and regulations fully conform with and implement the intent of Congress."

§ 104—provides statewide USFS release language.

P.L. 99-555—the Georgia Wilderness Act of 1986

§ 2—designates four new USFS wilderness areas and one USFS wilderness area addition totaling 42,258 acres in Georgia.

§ 4—directs management in accordance with the Wilderness Act, subject to valid existing rights.

P.L. 99-584—the Texas Wilderness Act Amendments of 1986

§ 2(a)—modifies the boundaries of the areas designated in P.L. 98-574 by reference to a new map.

§ 2(b)—directs management in accordance with the Wilderness Act, subject to valid existing rights; allows continued livestock grazing "subject to such reasonable regulations as are deemed necessary."

P.L. 99-635—Olympic National Park Boundary Adjustment

§ 1(c)—replaces existing designations for three USFS wilderness areas in Washington, deleting 4,571 acres. (This was temporary; Olympic National Park wilderness was designated in P.L. 100-668.)

P.L. 100-184—the Michigan Wilderness Act of 1987

§ 3—designates 10 new USFS wilderness areas totaling 91,535 acres in Michigan.

§ 5—directs management in accordance with the Wilderness Act, subject to valid existing rights.

§ 6—provides statewide USFS release language.

§ 7—states that the statute creates no buffer zone.

§ 8—directs that state jurisdiction over and responsibilities for fish and wildlife are unaffected.

§ 9—assures the "right of adequate access" to private lands and requires "concurrence of the owner" for the acquisition of private lands.

§ 10—allows measures to control fire, insects, and diseases "as provided in … the Wilderness Act."

P.L. 100-225—El Malpais National Monument, Title IV

§ 401—designates two new BLM wilderness areas totaling 98,210 acres in New Mexico.

§ 402(a)—directs management in accordance with the Wilderness Act, subject to valid existing rights.

§ 402(b)—allows continued livestock grazing "subject to reasonable regulations, policies, and practices" that "fully conform with and implement the intent of Congress" in the Wilderness Act and § 108 of P.L. 96-560.

P.L. 100-326—Virginia Wilderness

§ 1—designates four new USFS wilderness areas and two USFS wilderness area additions totaling 27,687 acres in Virginia.

§ 2—directs management in accordance with the Wilderness Act, subject to valid existing rights.

§ 4—repeals the wilderness study section (§ 6) of P.L. 98-586.

P.L. 100-499—the Winding Stair Mountain National Recreation Area and Wilderness Area Act

§ 3—designates two new USFS wilderness areas totaling 13,954 acres in Oklahoma.

§ 5—directs management in accordance with the Wilderness Act, subject to valid existing rights.

§ 6—provides statewide USFS release language for Oklahoma.

§ 7—states that the statute creates no buffer zone.

§ 16—allows measures to control fire, insects, and diseases "as provided in … the Wilderness Act."

§ 18—directs that state jurisdiction over and responsibilities for fish and wildlife are unaffected.

P.L. 100-524—the Congaree Swamp National Monument [now National Park] Expansion and Wilderness Act

§ 2(a)—designates one new NPS wilderness area with 15,010 acres in South Carolina.

§ 2(b)—designates 6,840 acres of potential NPS wilderness in South Carolina; adds the area to wilderness when nonfederal lands have been acquired and "all uses thereon prohibited by the Wilderness Act have ceased."

§ 4—directs management in accordance with the Wilderness Act, subject to valid existing rights.

P.L. 100-547—the Sipsey Wild and Scenic River and Alabama Addition Act of 1988

§ 201(a)—designates two USFS wilderness area additions totaling 13,970 acres in Alabama.

§ 201(b)—directs management in accordance with the Wilderness Act, subject to valid existing rights.

§ 201(c)—allows measures to control fire, insects "including the Southern Pine Beetle," and diseases "subject to conditions as the Secretary determines desirable," including "such measures in the Secretary's judgment … deemed necessary to protect threatened resources on Federal, State, or private adjacent lands."

§ 201(d)—allows the Secretary to "convert existing roads … into suitable hiking or horse trails."

§ 202—provides statewide USFS release language.

P.L. 100-668—the Washington Park Wilderness Act of 1988

§ 101—designates one new NPS wilderness area with 876,669 acres in Washington.

§ 102—allows the Secretary to "upgrade, maintain and replace, as necessary, the Wolf Creek underground powerline to Hurricane Ridge: *Provided*, That to the extent practicable, such maintenance and operation shall be conducted in such a manner as to remain consistent with wilderness management."

§ 201—designates one new NPS wilderness area with 634,614 acres and potential wilderness additions of 5,226 acres in Washington.

§ 202—allows continued operation of specified hydroelectric projects.

§ 301—designates one new NPS wilderness area with 216,855 acres in Washington.

§ 302—allows the Secretary to "upgrade, maintain and replace as necessary, the Paradise powerline from Longmire to Paradise: *Provided*, That to the extent practicable, such maintenance and operation shall be conducted in such a manner as to protect scenic viewsheds."

Title IV (a)(1)—directs management in accordance with the Wilderness Act, subject to valid existing rights.

Title IV (a)(2)—requires administration of potential wilderness additions "insofar as practicable as wilderness" and adds the areas upon *Federal Register* notice "that all uses thereon that are

inconsistent with the Wilderness Act have ceased or that non-Federal interests in land have been acquired."

Title IV (a)(3)—states that the statute creates no buffer zone.

Title V, § 502—"subject to valid existing rights … Congress hereby expressly reserves such water rights as necessary, for the purposes for which such areas are so designated."

P.L. 101-195—the Nevada Wilderness Protection Act of 1989

§ 2—designates 13 new USFS wilderness areas and one USFS wilderness area addition totaling 733,400 acres in Nevada.

§ 4—directs management in accordance with the Wilderness Act, subject to valid existing rights.

§ 5—provides statewide USFS release language.

§ 6(a)—allows continued livestock grazing "where established before the date of enactment" in accordance with the Wilderness Act and P.L. 96-560.

§ 6(b)—requires a review of all grazing management "to insure that such policies, practices, and regulations fully conform with and implement the intent of Congress."

§ 7—states that the statute creates no buffer zone.

§ 8—"reserves a quantity of water sufficient to fulfill the purposes." Requires the Secretary to act to protect those rights.

§ 9—directs that state jurisdiction over and responsibilities for fish and wildlife are unaffected.

§ 10—authorizes, "where appropriate, the installation and maintenance of hydrologic, meteorologic, or climatological collection devices … where such facilities and access thereto are essential to flood warning, flood control and water reservoir operation," subject to reasonable terms and conditions.

§ 11—states that the statute is to have no effect on low-level military overflights, new units of special use airspace, and flight training routes over four specific wilderness areas.

P.L. 101-401—the Maine Wilderness Act of 1990

§ 2—designates one new USFS wilderness area with 12,000 acres in Maine.

§ 4—directs management in accordance with the Wilderness Act, subject to valid existing rights.

§ 5—provides statewide USFS release language.

§ 6—states that the statute creates no buffer zone.

§ 7—allows measures to control fire, insects, and diseases "as provided in … the Wilderness Act."

§ 8—directs that state jurisdiction over and responsibilities for fish and wildlife are unaffected.

P.L. 101-626—the Tongass Timber Reform Act

§ 202—amends a previous wilderness statute (P.L. 96-487) to designate five new USFS wilderness areas and one USFS wilderness area addition totaling 296,080 acres in Alaska.

P.L. 101-628—the Arizona Desert Wilderness Act of 1990

§ 101(a)—designates 38 new BLM wilderness areas and one BLM wilderness area addition totaling 1,089,970 acres in Arizona.

§ 101(a)(3)—provides that "the existing water pipeline for the town of Oatman, together with the right of ingress and egress thereto, may be operated, maintained, and upgraded, subject to reasonable requirements to protect wilderness values."

§ 101(a)(20)—provides that a specified right-of-way and "the right of ingress or egress thereto shall not be affected… and the existing powerline utilizing such right-of-way may be operated, maintained, and upgraded, subject to reasonable requirements to protect wilderness values."

§ 101(b)—directs management in accordance with the Wilderness Act, subject to valid existing rights.

§ 101(d)—states that the statute creates no buffer zone.

§ 101(e)—directs that state jurisdiction over and responsibilities for fish and wildlife are unaffected.

§ 101(f)(1)—allows continued livestock grazing "where established before the date of enactment" in accordance with the Wilderness Act and Appendix A of H.Rept. 101-405.

§ 101(f)(2)—requires a review of all grazing management "to insure that such policies, practices, and regulations fully conform with and implement the intent of Congress."

§ 101(g)—"reserves a quantity of water sufficient to fulfill the purposes of this title." Requires the Secretary to act to protect those rights.

§ 101(h)—states that the statute is to have no effect on low-level military overflights, new units of special use airspace, and flight training routes.

§ 101(i)—requires mineral rights in the wilderness areas to be acquired by exchange.

§ 101(k)—modifies a previously-enacted provision for a specific wilderness area concerning management and use of a particular road.

§ 101(l)—states that the statute is to have no effect on "the operation for flood control purposes" of a particular dam.

§ 102—provides statewide BLM release language, except for two specified areas.

§ 301(a)—designates four new FWS wilderness areas totaling 1,343,444 acres in Arizona.

§ 301(b)—directs management in accordance with the Wilderness Act, subject to valid existing rights.

§ 301(c)(1)(A)[24]—"reserves a quantity of water sufficient to fulfill the purposes of this title."

§ 301(c)(1)(B)[24]—establishes "no right to water of the Colorado River are reserved, either expressly, impliedly, or otherwise."

§ 301(c)(2)[24]—requires the Secretary to act to protect those rights.

§ 301(c)(3)[24]—directs no "relinquishment or reduction of any water right reserved or appropriated by the United States … before the date of enactment."

§ 301(e)—states that the statute is to have no effect on "the operation of federally owned dams located on the Colorado River."

§ 301(f)—states that the statute is to have no effect on low-level military overflights or ground instrumentation for the Cabeza Prieta National Wildlife Refuge.

§ 301(g)—states that the statute is to have no effect on "border operations by the Immigration and Naturalization Service, the Drug Enforcement Agency, or the United States Customs Service."

§ 302—directs that nothing in Titles I, II, or III "shall amend, construe, supersede, or preempt any State law, Federal law, interstate compact, or international treaty pertaining to the Colorado River (including its tributaries) in the Upper Basin, including, but not limited to, the appropriation, use, development, storage, regulation, allocation, conservation, exportation, or quality of those waters."

H. Rept. 101-405 to accompany H.R. 2570 (P.L. 101-626)—Appendix A. Grazing Guidelines

Pages 41-43 of the report supplement the "very clear intent" of § 4(d)(4)(2) of the Wilderness Act and of H.Rept. 96-617 "that livestock grazing, and activities and the necessary facilities to support a livestock grazing program, will be permitted to continue … when grazing was established prior to classification of an area as wilderness." The guidelines provide direction on five points:

1. Prohibits curtailing grazing simply because an area has been designated as wilderness, and directs that wilderness designation should not be used "as an excuse by administrators to slowly 'phase out' grazing."

2. Allows maintenance of existing supporting facilities (e.g., fences, line cabins, water wells and lines, stock tanks, etc.). Allows occasional use of motorized equipment where practical alternatives do not exist, "based on a rule of practical necessity and reasonableness."

[24] Designated as §301(c)(1(A), §301(c)(1)(B), §301(c)(2), and §301(c)(3) in original. Should have been designated as §301(d)(1)(A), §301(d)(1)(B), §301(d)(2), and §301(d)(3), respectively.

3. Does not require replacement or reconstruction of deteriorated facilities or improvements to use natural materials, "unless the material and labor costs of using natural materials are such that their use would not impose unreasonable additional costs."

4. Allows construction of new improvements or replacement of deteriorated facilities, if in accordance with these guidelines and area management plans and "primarily for the purpose of resource protection and the more effective management of these resources."

5. Allows motorized equipment for emergencies "such as rescuing sick animals or the placement of feed in emergency situations."

H. Rept. 101-405 to accompany H.R. 2570 (P.L. 101-626)—Appendix B. Wildlife Management Guidelines

Pages 44-51 present the committee's conclusions of applicable, previously existing BLM policies and guidelines for fish and wildlife management in wilderness areas. After purposes and general policy, the report includes 14 points authorizing various activities, with multiple guidelines for implementing several of the points:.

1. Allows motorized equipment if "truly necessary to administer." Expects "that any such use should be rare and temporary; that no roads can be built; and that … such use is the minimum necessary to accomplish the task."

2. Allows fish and wildlife research and management surveys when conducted "in a manner compatible with the preservation of the wilderness environment." Methods that "temporarily infringe on the wilderness environment may be approved if alternative methods or other locations are not available." Aircraft use must "minimizes disturbance of other users, including humans and wildlife."

3. Allows facility development and habitat alteration "in rare instances … to alleviate adverse impacts caused by human activities." Allows existing flow-maintenance dams, water developments, water diversions, ditches, and other fish and wildlife habitat developments. Allows "maintenance of existing water supplies and development of additional water supplies … but only when essential to preserve the wilderness resource and to correct unnatural conditions resulting from human influence."

4. Allows actions necessary to protect or recover threatened or endangered species, "including habitat manipulation and special protection measures." Directs using "only the minimum actions necessary and the methods most appropriate in wilderness."

5. Allows angling, hunting and trapping, "subject to applicable State and Federal laws and regulations."

6. Allows scientific sampling of fish and wildlife populations in wilderness.

7. Allows chemical treatment "to prepare waters for reestablishment of indigenous species, to protect or recover Federally listed threatened or endangered species, or to correct undesirable conditions resulting from the influence of man. Species of fish traditionally stocked before wilderness designation may be considered indigenous."

8. Allows collecting fish spawn "when alternative sources are unavailable or unreliable, or where spawn taking was an established practice before wilderness designation."

9. Allows fish stocking "using means appropriate for wilderness," to reestablish or maintain an indigenous species, or (b) to perpetuate or recover a threatened or endangered species. Prohibits stocking with exotic species.[25] Allows stocking of barren lakes or streams, "if there is mutual agreement that no appreciable loss of scientific values or adverse effects on wilderness resources will occur."

10. Allows aerial fish stocking "where this was an established practice before the wilderness designation or where other practical means are not available."

11. Allows wildlife transplants (removal, reintroduction, or supplemental introduction) "if necessary: (a) to perpetuate or recover a threatened or endangered species; of (b) to restore the population of an indigenous species eliminated or reduced by human influence." Directs transplants "in a manner compatible with the wilderness character of the area."

12. Allows "wildlife damage control," including for non-indigenous species, "to protect Federally listed threatened or endangered species, to prevent transmission of diseases or parasites affecting other wildlife and humans, or to prevent serious losses of domestic livestock."

13. Allows control of visitor access and use to protect wildlife "sensitive to human encroachments on their ranges … particularly during certain seasons of the year."

14. Directs fire management to "(a) permit lightning-caused fires to play, as nearly as possible, their natural ecological role within wilderness and (b) reduce, to an acceptable level, the risks and consequences of wildfire within wilderness or escaping from wilderness."

P.L. 101-633—the Illinois Wilderness Act of 1990

§ 3—designates seven new USFS wilderness areas and one USFS wilderness area addition totaling 26,266 acres in Illinois.

§ 5—directs management in accordance with the Wilderness Act, subject to valid existing rights.

§ 6—states that the statute creates no buffer zone.

§ 7—directs that state jurisdiction over and responsibilities for fish and wildlife are unaffected.

§ 8—allows measures to control fire, insects, and diseases.

§ 9—permits relatives and descendents, and those accompanying them, access to and maintenance of cemeteries, limited to "appropriate access and maintenance to minimize any detrimental effects on the wilderness resource."

[25] Presumably, this would still allow "species traditionally stocked before wilderness designation," even if they were exotic species, given the direction in #7 that such species "may be considered indigenous."

P.L. 102-217—the Chattahoochee National Forest Protection Act of 1991

§ 2(a)—designates two new USFS wilderness areas and one USFS wilderness area addition totaling 25,840 acres in Georgia.

§ 2(b)—directs management in accordance with the Wilderness Act, subject to valid existing rights.

P.L. 102-301—the Los Padres Condor Range and River Protection Act

§ 2—designates four new USFS wilderness areas and three USFS wilderness area additions totaling 400,450 acres, and one potential USFS wilderness addition with 50 acres in California.

§ 2(5)—directs that "the Toad Springs road corridor delineated as potential wilderness shall remain open to off road vehicle traffic until construction of an alternative route which bypasses this area is completed. These potential wilderness lands shall be automatically incorporated in … [the] Wilderness upon publication of a notice in the Federal Register."

§ 3(a)—directs management in accordance with the Wilderness Act, subject to valid existing rights.

§ 3(b)—allows that "to guarantee the continued viability of the watersheds … and to ensure the continued health and safety of the communities serviced by such watershed, the Secretary of Agriculture may take such measures as are necessary for fire prevention and watershed protection including, but not limited to, acceptable fire presuppression and fire suppression measures and techniques."

§ 3(c)—allows "management activities to maintain or restore fish and wildlife populations, including the California condor, and the habitats … where consistent with relevant wilderness management plans in accordance with appropriate policies and guidelines such as those set forth in Policies and Guidelines for Fish and Wildlife Management in National Forests and Bureau of Land Management Wilderness, dated August 25, 1986."

§ 3(d)—states that the statute creates no buffer zone.

§ 3(e)—"reserves a quantity of water sufficient to fulfill the purposes of this Act." Directs the Secretary to act to protect those rights.

§ 5—provides USFS release language for specified areas.

P.L. 103-77—the Colorado Wilderness Act of 1993

§ 2(a)—designates nine new USFS wilderness areas and 10 USFS wilderness area additions totaling 611,730 acres in Colorado.[26]

§ 2(a)(8)—authorizes acquisition of mineral reservations "only by donation or exchange."

§ 2(a)(13)—establishes "no right, or claim of right, to the diversion and use of the waters by the Fryingpan-Arkansas Project shall be prejudiced, expanded, diminished, altered, or affected by this Act, nor shall anything in this Act be construed to expand, abate, impair, impede, limit, interfere with, or prevent the construction, operation, use, maintenance, or repair of the project facilities and diversion systems to their full extent."

§ 3(a)—directs management in accordance with the Wilderness Act, subject to valid existing rights.

§ 3(b)—allows continued livestock grazing in accordance with the Wilderness Act, § 108 of P.L. 96-560, and Appendix A of H.Rept. 101-405.

§ 3(c)—directs that state jurisdiction over fish and wildlife is unaffected.

§ 3(e)—states that the statute creates no buffer zone.

§ 3(g)(1)—states that the statute is to have no effect on valid existing rights.

§ 4—repeals the wilderness study provisions of P.L. 96-560.

§ 8(b)(1)—prohibits any federal employee from asserting, and any court or agency from considering, "any claim to or for water or water rights" based on wilderness designation "as constituting an express or implied reservation of water or water rights."

§ 8(c)—directs that "neither the President nor any" other federal employee "shall fund, assist, authorize, or issue a license or permit for the development of any new water resource facility" as defined in § 8(a)(3) within the wilderness areas.

§ 8(d)(1)—allows "reasonable access to water resource facilities in existence on the date of enactment … including motorized access where necessary and customarily employed on routes existing on the date of enactment."

§ 8(d)(2)—allows existing, customarily used access routes to be "used, maintained, repaired, and replaced to the extent necessary to maintain their present function, design, and serviceable operation, so long as such activities have no increased adverse impacts on the resources and values."

§ 8(d)(3)—allows existing water resource facilities "to be used, operated, maintained, repaired, and replaced to the extent necessary for the continued exercise … of vested water rights."

[26] Section 3(a)(2) transfers jurisdiction of the small amount of BLM land included in some of the wilderness designation to the USFS.

§ 8(d)(4)—allows water resource facilities and access routes to be "maintained and repaired when and to the extent necessary to prevent increased adverse impacts on the resources and values."

§ 8(e)—states that the statute is to have no effect or limitation on "the use, operation, maintenance, repair, modification, or replacement of water resource facilities in existence on the date of enactment."

§ 8(f)—requires monitoring of "the operation of and access to water resource facilities."

§ 8(g)(1)—directs that nothing "shall be construed as limiting, altering, modifying, or amending any of the interstate compacts or equitable apportionment decrees."

§ 8(g)(1)—prohibits any federal employee from asserting, and any court or agency from considering, any claim to or "for waters of the North Platte River" based on the designation of a particular wilderness area .

P.L. 103-433—the California Desert Protection Act of 1994

Title I—Designation of Wilderness Areas to be Administered by the Bureau of Land Management

§ 102—designates 66 new BLM wilderness areas and three BLM wilderness area additions totaling 3,667,020 acres in California.

§ 102(1)—authorizes a right-of-way and road construction solely for installation of a space energy laser facility, if requested by the Secretary of the Navy within 15 years of enactment. "So far as practicable, any such road shall be aligned in a manner that takes into account the desirability of minimizing adverse impacts on wilderness values."

§ 102(13)—authorizes a right-of-way and road construction within the identified "nonwilderness road corridor" upon application from the Department of Defense.

§ 103(a)—directs management in accordance with the Wilderness Act, subject to valid existing rights.

§ 103(c)—allows continued livestock grazing "if established before the date of enactment … subject to such reasonable regulations, policies, and practices as the Secretary deems necessary," in accordance with the Wilderness Act and § 101(f) of P.L. 101-628.

§ 103(d)—states that the statute creates no buffer zone.

§ 103(e)—directs that state jurisdiction over fish and wildlife is unaffected.

§ 103(f)—authorizes "management activities to maintain or restore fish and wildlife populations and the habitats," including "the use of motorized vehicles by the appropriate State agencies."

§ 103(g)—states that the statute is to have no effect on "Federal, State, and local law enforcement agencies from conducting law enforcement and border operations as permitted before the date of enactment … including the use of motorized vehicles and aircraft."

§ 104(a)—provides BLM release language for specified areas; (b) retains wilderness-like management "that does not impair the suitability of such areas for preservation as wilderness" for seven BLM wilderness study areas totaling 315,230 acres in California.

§ 104(c)—withdraws the wilderness study areas from public land laws, mining laws, mineral and geothermal leasing laws, and mineral material disposition, subject to valid existing rights.

§ 105—designates one BLM wilderness study area with 11,200 acres in California.

§ 106—requires a report on "current and planned exploration, development or mining activities" in four additional proposed wilderness areas within 10 years of enactment.

Title II—Designation of Wilderness Areas to be Administered by the United States Fish and Wildlife Service

§ 201(a)—designates three new FWS wilderness areas totaling 9,031 acres in California.

§ 201(b)—directs management in accordance with the Wilderness Act, subject to valid existing rights.

§ 202—states that the statute is to have no effect on "the operation of federally owned dams located on the Colorado River."

§ 203—provides that nothing "shall amend, construe, supersede, or preempt any State law, Federal law, interstate compact, or international treaty pertaining to the Colorado River (including its tributaries) in the Upper Basin, including, but not limited to, the appropriation, use, development, storage, regulation, allocation, conservation, exportation, or quality of those waters."

§ 204—provides that this title establishes "no rights to water of the Colorado River are reserved, either expressly, impliedly, or otherwise."

Title VI—National Park Wilderness

§ 601(a)—designates three new NPS wilderness areas totaling 3,985,018 acres in California.

§ 601(b)—designates one potential NPS wilderness with 6,840 acres in California to be added "upon cessation of all uses prohibited by the Wilderness Act and publication in the Federal Register of a notice;" directs management "insofar as practicable as wilderness."

§ 603—directs management in accordance with the Wilderness Act.

Title VII—Miscellaneous Provisions

§ 706—"reserves a quantity of water sufficient to fulfill the purposes of this Act." Directs the Secretary to act to protect those rights.

Title VIII—Military Lands and Overflights

§ 802(a) & (b)—states that there is no effect from "this Act, the Wilderness Act, or other land management laws generally applicable to" the NPS and wilderness areas on "low-level overflights of military aircraft" or "designation of new units of special airspace or the use of establishment of military flight training routes."

P.L. 104-208 (Omnibus Consolidated Appropriations Act, FY1997), Division B—the Oregon Resource Conservation Act of 1996

Title I—the Opal Creek Wilderness and Scenic Recreation Area Act of 1996

§ 104(a)—designates one new USFS wilderness area and transfers part of an existing wilderness to the new area in Oregon.

§ 104(b)—establishes conditions for the designation and transfer.

Title VII—Oregon Islands Wilderness, Additions

§ 701(a)—designates one FWS wilderness area addition with 95 acres in Oregon.

§ 701(c)—designates "all federally owned named, unnamed, surveyed and unsurveyed rocks, reefs, islets and islands lying within three geographic miles off the coast of Oregon and above mean high tide" as part of the wilderness, and transfers jurisdiction to the FWS.

P.L. 104-333—the Omnibus Parks and Public Lands Management Act of 1996

§ 302—Anaktuvuk Pass Land Exchange

(c)(1)—modifies the designation of one NPS wilderness area in Alaska, deleting 73,993 acres and adding 56,825 acres (a net deletion of 17,168 acres).

§ 1022—the Bisti/De-Na-Zin Wilderness Expansion and Fossil Forest Protection Act

(b)(1)—designates one BLM wilderness area addition with 16,525 acres in New Mexico.

(b)(4)—amends P.L. 98-603 by adding a new § 102(e) withdrawing the areas from the mining laws, mineral leasing laws, geothermal leasing laws, and mineral material sales laws, but allowing the exchange of coal leases and oil and gas leases, and authorizing for existing oil and gas leases "terms, stipulations, and conditions … necessary to avoid significant disturbance of the land surface or impairment of the ecological, educational, scientific, recreational, scenic, and other wilderness values of the lands."

§ 1023—the Opal Creek Wilderness and Scenic Recreation Area

Reenacts Title I of Division B of P.L. 104-208.

§ 1027—Oregon Islands Wilderness, Additions

Reenacts Title VII of Division B of P.L. 104-208.

P.L. 105-75—Eagles Nest Wilderness Boundary Adjustment

§ 1(a)—designates one USFS wilderness area addition with 160 acres in Colorado, pending the acquisition of the parcel before December 31, 2000.

P.L. 105-277 (Omnibus Consolidated and Emergency Supplemental Appropriations Act, 1999), Division A, § 101(e) (Interior and Related Agencies)

§ 610—designates one USFS wilderness study area of 15,000 acres in Washington, pending the consummation of a land exchange, with recommendations to the President within three years, management of the lands, "subject to valid existing rights and existing uses … until Congress determines otherwise or until December 31, 2003, … to maintain their wilderness character," and withdraws the lands from mining and mineral leasing (including geothermal leasing) laws.

P.L. 106-65 (FY2002 National Defense Authorization Act)

§ 3032(b)(1)—directs management the previously-established FWS Cabeza Prieta Wilderness "(A) for the purposes for which the refuge and wilderness were established; and (B) to support current and future military aviation training needs."

§ 3032(c) & (d)—extend and amend an existing memorandum of understanding to continue and expand military aviation and ground instrumentation with few limitations.

§ 3032(e)—authorizes public closures of the refuge and wilderness for public safety and national security.

P.L. 106-76—the Black Canyon of the Gunnison National Park and Gunnison Gorge National Conservation Area Act of 1999

§ 6(a)—adds 4,419 acres to an existing NPS wilderness in Colorado.

§ 8(a)(1)—designates one new BLM wilderness area with 17,700 acres in Colorado.

§ 8(b)—directs management in accordance with the Wilderness Act, subject to valid existing rights.

§ 8(c)—directs that state jurisdiction over fish and wildlife is unaffected.

§ 10(a)—establishes no "express or implied reservation of water for any purpose" or effect on existing water rights.

§ 10(b)—requires establishing "any new water right that … is necessary for the purposes of this Act … in accordance with the procedural and substantive requirements" of the state.

P.L. 106-145—the Otay Mountain Wilderness Act of 1999

§ 3—designates one new BLM wilderness area with 18,500 acres in California.

§ 5—provides BLM release language for specified areas.

§ 6(a)—directs management in accordance with the Wilderness Act, subject to valid existing rights.

§ 6(b)—authorizes "drug interdiction, border operations, and wildland fire management operations," in accordance with the Wilderness Act and "subject to such conditions as the Secretary considers appropriate."

§ 8—states that the statute creates no buffer zone.

P.L. 106-156—the Dugger Mountain Wilderness Act of 1999

§ 2(a)—designates one new USFS wilderness area with 9,200 acres in Alabama.

§ 2(c)—directs management in accordance with the Wilderness Act, subject to valid existing rights.

§ 2(d)—allows "ground-based mechanical and motorized equipment to disassemble and remove" the fire tower and supporting structures. The road to the fire tower is to be closed after the tower is removed.

P.L. 106-353—the Colorado Canyons National Conservation Area and Black Ridge Canyons Wilderness Act of 2000

§ 5—designates one new BLM wilderness area with 75,550 acres in Colorado.

§ 6(c)—withdraws the areas from public land laws, mining laws, mineral and geothermal leasing laws, and mineral material disposition, subject to valid existing rights.

§ 6(e)—directs management in accordance with the Wilderness Act, subject to valid existing rights.

§ 6(f)—authorizes hunting, trapping, and fishing; allows zone and period closures for "public safety, administration, or public use and enjoyment."

§ 6(g)(2)—allows livestock grazing, consistent with the Wilderness Act and Appendix A of H.Rept. 101-405.

§ 6(h)—requires "a comprehensive management plan for the long-range protection and management of the Conservation Area and the Wilderness" within three years.

§ 6(i)—states that the statute creates no buffer zone.

§ 6(l)(2)—directs that nothing shall (A) constitute "either an express or implied reservation of any water or water rights;" (B) affect any existing "conditional or absolute water rights in the State;" (C) be construed as "limiting, altering, modifying, or amending any of the interstate compacts or equitable apportionment decrees that apportion water."

§ 9—directs the Secretary (a) to "continue to allow private landowners reasonable access to inholdings;" and (b) to grant "public right of access, including commercial vehicles, to Glade Park."

P.L. 106-399—the Steens Mountain Cooperative Management and Protection Act of 2000

§ 201—designates one new BLM wilderness area with 170,000 acres in Oregon.

§ 202(a)—directs management in accordance with the Wilderness Act.

§ 202(c)—requires "reasonable access to private lands within the boundaries."

§ 202(d)(1)—allows continued livestock grazing, consistent with the Wilderness Act and Appendices A and B of H.Rept. 101-405.

§ 202(d)(2)—directs permanent retirement of grazing permits for identified lands.

§ 203—directs that "nothing shall constitute an express or implied claim or denial on the part of the Federal Government as to exemption from State water laws."

§ 204—states that the statute is to have no effect on existing wilderness study areas; (c) expands one existing BLM wilderness study area.

P.L. 106-456—the Spanish Peaks Wilderness Act of 2000

§ 2—amends P.L. 103-77 to designate one new USFS wilderness area with 18,000 acres in Colorado.

§ 3(a)—directs continued "historic uses of the Bulls Eye Mine Road … subject to such terms and conditions as the Secretary may provide."

§ 3(b)—requires access to privately owned land within the wilderness in accordance with the Wilderness Act.

P.L. 106-471—Virginia Wilderness

§ 1—amends P.L. 100-326 to designate two new USFS wilderness areas totaling 10,571 acres in Virginia.

P.L. 106-554 (Consolidated Appropriations Act, 2004), incorporating by reference the Black Rock Desert-High Rock Canyon Emigrant Trails National Conservation Area Act of 2000

§ 8(a)—designates 10 new BLM wilderness areas totaling 757,500 acres in Nevada.

§ 8(b)—directs management in accordance with the Wilderness Act, subject to valid existing rights.

§ 8(d)—allows continued livestock grazing, subject to "reasonable regulations, policies, and practices" that conform with the Wilderness Act, § 101(f) of P.L. 101-628.

P.L. 107-107 (FY2002 National Defense Authorization Act)

§ 1049—authorizes closure of the Vieques Naval Training Range, Puerto Rico; transfers the area to the Department of the Interior as part of the National Wildlife Refuge System; directs that the 900-acre "Live Impact Area" be administered as wilderness; and closes the area to access by the public.

P.L. 107-206 (Supplemental Appropriations Act for Further Recovery From and Response to Terrorist Attacks on the United States)

§ 706(n)—amends § 103 of P.L. 96-560 to designate one USFS wilderness area addition with 3,600 acres in South Dakota.

P.L. 107-216—the James Peak Wilderness and Protection Area Act

§ 2(a)—amends P.L. 103-77 to designate one new USFS wilderness area and two USFS wilderness area additions totaling 17,195 acres in Colorado.

P.L. 107-282—the Clark County Conservation of Public Land and Natural Resources Act of 2002

§ 202(a)—designates 17 new BLM wilderness areas and one BLM wilderness area addition totaling 451,915 acres in Nevada.

§ 202(d)—withdraws the areas from public land laws, mining laws, mineral leasing laws, mineral materials laws, and geothermal leasing laws.

§ 203(a)—directs management in accordance with the Wilderness Act, subject to valid existing rights.

§ 203(b)—allows continued livestock grazing, subject to "reasonable regulations, policies, and practices" that conform with the Wilderness Act and Appendix A of H.Rept. 101-405.

§ 203(d)(2)—states that nothing in the act "(A) … shall constitute or be construed to constitute either an express or implied reservation by the United States of any water or water rights … (B) … shall affect any water rights in the State … (C) … shall be construed as establishing a precedent … (D) … shall be construed as limiting, altering, modifying, or amending any interstate compacts or equitable apportionment decrees that apportion water among and between the State of Nevada and other States; [and] (E) … construed as limiting, altering, modifying, or amending the Clark County Multi-Species Habitat Conservation Plan."

§ 203(d)(3)—directs the Secretary to "follow the procedural and substantive requirements of the law of the State … to obtain and hold any water rights."

§ 203(d) (4)(B)—prohibits funding, assisting, authorizing, or permitting for new water resource facilities within the wilderness areas.

§ 204—states that the statute creates no buffer zone.

§ 205(a)—states that the statute is to have no effect on low-level military overflights, flight testing or evaluation, or new units of special use airspace.

§ 206—prohibits diminution of tribal access rights for tribal activities, "including spiritual, cultural, and traditional food-gathering activities."

§ 207—provides BLM release language for specified areas.

§ 208(a)—directs that state jurisdiction over fish and wildlife is unaffected.

§ 208(b)—authorizes "management activities to maintain or restore fish and wildlife populations and the habitats to support such populations … in accordance with appropriate policies" from Appendix B of H.Rept. 101-405, "including the occasional and temporary use of motorized vehicles if such use … would promote healthy, viable, and more naturally distributed wildlife populations that would enhance wilderness values … with the minimum impact necessary."

§ 208(c)—authorizes continued use of aircraft "to survey, capture, transplant, monitor, and provide water for wildlife populations, including bighorn sheep, and feral stock, horses, and burros" consistent with the Wilderness Act and Appendix B of H.Rept. 101-405.

§ 208(d)—authorizes "structures and facilities … for wildlife water development projects, including guzzlers" if they enhance the wilderness values and "the visual impacts … can reasonably be minimized."

§ 208(e)—authorizes, in consultation with the state, zones and periods of no hunting, fishing, or trapping "for public safety, administration, or compliance with applicable laws."

§ 208(f)—directs a cooperative agreement with the state specifying "the terms and conditions under which the State … may use wildlife management activities in the wilderness areas."

§ 209—directs that nothing "precludes … wildfire management operations (including operations using aircraft or mechanized equipment) to manage wildfires in the wilderness areas."

§ 210—directs that nothing "precludes … the installation and maintenance of hydrologic, meteorologic, or climatological collection devices … if the facilities and access … are essential to flood warning, flood control, and water reservoir operation," subject to prescribed terms and conditions.

§ 211—states that the statute is to have no effect on the "laws, regulations, or management policies applicable to the National Park Service for Lake Mead National Recreation Area."

P.L. 107-370—the Big Sur Wilderness and Conservation Act of 2002

§ 2(a)—designates 13 USFS and BLM wilderness area additions totaling 56,880 acres in California.

§ 3(a)—directs management in accordance with the Wilderness Act, subject to valid existing rights.

§ 3(b)—authorizes livestock grazing, consistent with the Wilderness Act, § 108 of P.L. 96-560, and Appendix A of H.Rept. 101-405.

§ 3(c)—directs that state jurisdiction over fish and wildlife is unaffected.

§ 3(d)—"reserves a quantity of water sufficient to fulfill the purposes of this Act." Directs the Secretary to act to protect those rights.

§ 4—directs management plan amendments to authorize "whatever appropriate actions … are necessary for fire prevention and watershed protection consistent with wilderness values."

§ 5(a)—states that the statute is to have no effect on low-level military overflights, new units of special use airspace, or military flight training routes.

§ 5(b)—authorizes continued "nonmotorized access to and use of the wilderness areas … for military training … in the same manner and degree as authorized prior to enactment."

§ 7—authorizes "the construction and maintenance of a new water line and corresponding spring box improvements adjacent to an existing domestic water service" in one wilderness area.

P.L. 108-424—the Lincoln County Conservation, Recreation, and Development Act of 2004, Title II

§ 203(a)—designates 14 new BLM wilderness areas totaling 768,294 acres in Nevada.

§ 203(d)—withdraws the areas from public land laws, mining laws, mineral leasing laws, and geothermal leasing laws.

§ 204(a)—directs management in accordance with the Wilderness Act, subject to valid existing rights.

§ 204(b)—allows continued livestock grazing, subject to "reasonable regulations, policies, and practices" that are consistent with the Wilderness Act and Appendix A of H.Rept. 101-405.

§ 204(d)(2)—directs that nothing "(A) shall constitute or be construed to constitute either an express or implied reservation by the United States of any water or water rights … (B) shall affect any water rights in the State … (C) shall be construed as establishing a precedent … or (E) shall be construed as limiting, altering, modifying, or amending any of the interstate compacts or equitable apportionment decrees that apportion water among and between the State and other States."

§ 204(d)(3)—directs the Secretary to "follow the procedural and substantive requirements of the law of the State … to obtain and hold any water rights."

§ 204(d)(4)(B)—prohibits funding, assisting, authorizing, or permitting for new water resource facilities within the wilderness areas.

§ 205—states that the statute creates no buffer zone.

§ 206—states that the statute is to have no effect on low-level military overflights, flight testing or evaluation, or new units of special use airspace.

§ 207—prohibits diminution of tribal access rights for tribal activities, "including spiritual, cultural, and traditional food-gathering activities."

§ 208—provides BLM release language for specified areas.

§ 209(a)—directs that state jurisdiction over fish and wildlife is unaffected.

§ 209(b)—authorizes "management activities to maintain or restore fish and wildlife populations and the habitats to support such populations … in accordance with appropriate policies" from Appendix B of H.Rept. 101-405, "including the occasional and temporary use of motorized vehicles if such use … would promote healthy, viable, and more naturally distributed wildlife populations that would enhance wilderness values … with the minimum impact necessary."

§ 209(c)—authorizes continued use of aircraft "to survey, capture, transplant, monitor, and provide water for wildlife populations, including bighorn sheep, and feral stock, horses, and burros" consistent with the Wilderness Act and Appendix B of H.Rept. 101-405.

§ 209(d)—authorizes "structures and facilities … for wildlife water development projects, including guzzlers" if they enhance the wilderness values and "the visual impacts … can reasonably be minimized."

§ 209(e)—authorizes, in consultation with the state, zones and periods of no hunting, fishing, or trapping "for public safety, administration, or compliance with applicable laws."

§ 209(f)—requires a cooperative agreement with the state specifying "the terms and conditions under which the State … may use wildlife management activities in the wilderness areas."

§ 210—directs that nothing "precludes … wildfire management operations (including operations using aircraft or mechanized equipment) to manage wildfires in the wilderness areas."

§ 211—directs that nothing "precludes … the installation and maintenance of hydrologic, meteorologic, or climatological collection devices … if the facilities and access … are essential to flood warning, flood control, and water reservoir operation" subject to prescribed terms and conditions.

P.L. 108-447 (Consolidated Appropriations Act, FY2005), Division E (Interior and Related Agencies)

§ 140(c)—designates one new NPS wilderness area with 33,500 acres in Wisconsin.

§ 140(d)(1)—directs management in accordance with the Wilderness Act, subject to valid existing rights.

§ 140(d)(2)—states that the statute is to have no effect on "any treaty rights;" management of the waters of Lake Superior; or "the use of motors on the lake waters, including snowmobiles and the beaching of motorboats … and the maintenance and expansion of any docks existing at the time of the enactment."

§ 145(a)—replaces § 2 of P.L. 97-250, essentially providing one NPS wilderness area addition of 1,026 acres and reducing the NPS potential wilderness by 1,218 acres in Georgia.

P.L. 109-94—the Ojito Wilderness Act

§ 3(a)—designates one new BLM wilderness area with 11,183 acres in New Mexico.

§ 3(c)—directs management in accordance with the Wilderness Act, subject to valid existing rights.

§ 3(f)—provides BLM release language for specified areas.

§ 3(g)—allows continued livestock grazing "where established before the date of enactment," consistent with the Wilderness Act and Appendix A of H.Rept. 101-405.

§ 3(h)—directs that state jurisdiction over or responsibilities for fish and wildlife are unaffected.

§ 3(i)—directs that nothing "(A) shall constitute or be construed to constitute either an express or implied reservation by the United States of any water or water rights … (B) shall affect any water rights in the State … (C) shall be construed as establishing a precedent … or (E) shall be construed as limiting, altering, modifying, or amending any of the interstate compacts or equitable apportionment decrees that apportion water among and between the State and other States."

§ 3(i)(3)—directs the Secretary to "follow the procedural and substantive requirements of the law of the State … to obtain and hold any water rights."

§ 3(i)(4)(B)—prohibits funding, assisting, authorizing, or permitting for new water resource facilities within the wilderness areas, except wildlife guzzlers.

§ 3(j)—withdraws areas from public land laws, mining laws, mineral and geothermal leasing laws, and mineral material laws, subject to valid existing rights.

P.L. 109-118—the Caribbean National Forest Act of 2005

§ 3(a)—designates one new USFS wilderness area with 10,000 acres in Puerto Rico.

§ 3(c)—directs management in accordance with the Wilderness Act, subject to valid existing rights.

§ 3(d)—directs that nothing "precludes the installation and maintenance of hydrologic, meteorological, climatological, or atmospheric data collection and remote transmission facilities, or any combination of those facilities … [if] essential to the scientific research purposes of the Luquillo Experimental Forest."

P.L. 109-163 (National Defense Authorization Act for FY2006), Subtitle H—Utah Test and Training Range

§ 384(a)—designates one new BLM wilderness area with 101,400 acres in Utah.

§ 384(b)—withdraws areas from public land laws, mining laws, mineral and geothermal leasing laws, and mineral material disposition, subject to valid existing rights.

§ 384(d)—directs management in accordance with the Wilderness Act, subject to valid existing rights.

§ 384(f)—directs that state jurisdiction over fish and wildlife is unaffected.

§ 384(g)—allows continued livestock grazing "subject to such reasonable regulations, policies, and practices" that conform with the Wilderness Act, § 101(f) of P.L. 101-628, and Appendix A of H.Rept. 101-405.

§ 384(h)—states that the statute creates no buffer zone.

§ 384(i)—provides BLM release language for specified areas.

P.L. 109-362—the Northern California Coastal Wild Heritage Wilderness Act

§ 3—designates eight new USFS and BLM wilderness areas and four USFS and BLM wilderness area additions totaling 264,559 acres in California.

§ 4(a)—directs management in accordance with the Wilderness Act, subject to valid existing rights.

§ 4(d)—withdraws areas from public land laws, mining laws, mineral and geothermal leasing laws, and mineral material disposition, subject to valid existing rights.

§ 4(e)—authorizes measures to control fire, insects, and diseases in accordance with the Wilderness Act and H.Rept. 98-40.

§ 4(f)—requires "adequate access to such property to ensure the reasonable use and enjoyment of the property by the owner."

§ 4(g)—states that the statute is to have no effect on "the installation and maintenance of the instrumentation" if the Secretary "determines that hydrologic, meteorologic, and climatological instrumentation is appropriate to further the scientific, educational, and conservation purposes."

§ 4(h)—states that the statute is to have no effect on low-level military overflights, new units of special use airspace, or military flight training routes.

§ 4(i)—allows continued livestock grazing "where established before the date of enactment," consistent with the Wilderness Act and Appendix A of H.Rept. 101-405.

§ 4(j)(1)—authorizes "management activities to maintain or restore fish and wildlife populations and … habitats" if consistent with applicable wilderness management plans and carried out in accordance with applicable guidelines and policies.

§ 4(j)(2)—directs that state jurisdiction over fish and wildlife is unaffected.

§ 4(k)—ensures access to "members of Indian tribes for traditional cultural and religious purposes" in accordance with the Wilderness Act and the American Indian Religious Freedom Act (P.L. 95-341), and allows temporary closures to the public of "the smallest practicable area for the minimum period of time necessary."

§ 4(l)—states that the statute creates no buffer zone.

§ 4(m)—prohibits closing "cherry-stemmed" roads (defined in the subsection) or prohibiting access on those roads, except "for purposes of significant resource protection or public safety."

§ 5—provides BLM release language for specified areas.

§ 6—designates one potential BLM wilderness area with 11,271 acres in California. Directs management as wilderness pending its designation upon the earlier of the *Federal Register* notice that the conditions incompatible with the Wilderness Act have been removed or five years after enactment. Also authorizes motorized equipment and mechanized transport for "ecological restoration (including the elimination of non-native species, removal of illegal, unused, or decommissioned roads, repair of skid tracks, and any other activities necessary to restore the natural ecosystems)," but directs use of "the minimum tool or administrative practice necessary to accomplish the ecological restoration with the least amount of adverse impact on wilderness character and resources."

P.L. 109-382—the New England Wilderness Act of 2006

Title I—New Hampshire

§ 102—designates one new USFS wilderness area and one USFS wilderness area addition with 34,500 acres in New Hampshire.

§ 104(a) & (b)—direct management in accordance with the Wilderness Act, subject to valid existing rights.

§ 104(c)—directs that state jurisdiction over and responsibilities for fish and wildlife are unaffected.

§ 104(d)—withdraws areas from public land laws, mining laws, mineral and geothermal leasing laws, subject to valid existing rights.

Title II—Vermont

§ 211—designates two new USFS wilderness areas and four USFS wilderness area additions totaling 41,652 acres in Vermont.

§ 213(a)—directs management in accordance with the Wilderness Act, subject to valid existing rights.

§ 213(b)—directs that state jurisdiction over fish and wildlife is unaffected, "including the stocking of fish … to support the Connecticut River Atlantic Salmon Restoration Program."

§ 213(c)—authorizes "the continuance of" three specified trails and "the marking and maintenance of associated trails and trail structures."

P.L. 109-432 (Tax Relief and Health Care Act of 2006) Division C (Other Provisions), Title III—the White Pine County Conservation, Recreation, and Development Act of 2006, Subtitle B

§ 323(a)—designates 12 new BLM wilderness areas and two BLM wilderness area additions totaling 558,133 acres in Nevada.

§ 323(d)—withdraws the areas from public land laws, mining laws, mineral leasing laws, and geothermal leasing laws.

§ 324(a)—directs management in accordance with the Wilderness Act, subject to valid existing rights.

§ 324(b)—allows continued livestock grazing, "subject to … reasonable regulations, policies, and practices" and consistent with the Wilderness Act and Appendix A of H.Rept. 101-405.

§ 324(d)(3)—directs that nothing "(A) shall constitute or be construed to constitute either an express or implied reservation by the United States of any water or water rights … (B) shall affect

any water rights in the State … (C) shall be construed as establishing a precedent … or (E) shall be construed as limiting, altering, modifying, or amending any of the interstate compact or equitable apportionment decree that apportions water among and between the State and other States."

§ 324(d)(4)—directs the Secretary to "follow the procedural and substantive requirements of the law of the State … to obtain and hold any water rights."

§ 324(d)(5)(B)—prohibits funding, assisting, authorizing, or permitting for new water resource facilities within the wilderness areas.

§ 325—states that the statute creates no buffer zone.

§ 326—states that the statute is to have no effect on low-level military overflights, flight testing or evaluation, or new units of special use airspace.

§ 327—prohibits diminution of tribal rights, including access for activities, "including spiritual, cultural, and traditional food-gathering activities."

§ 328—provides BLM release language for specified areas.

§ 329(a)—directs that state jurisdiction over fish and wildlife is unaffected.

§ 329(b)—authorizes "management activities … to maintain or restore fish and wildlife populations and the habitats" in accordance with the Wilderness Act and Appendix B of H.Rept. 101-405, "including the occasional and temporary use of motorized vehicles if such use … would promote healthy, viable, and more naturally distributed wildlife populations that would enhance wilderness values … with the minimum impact necessary."

§ 329(c)—authorizes continued use of aircraft "to survey, capture, transplant, monitor, and provide water for wildlife populations, including bighorn sheep, and feral stock, feral horses, and feral burros" consistent with the Wilderness Act and Appendix B of H.Rept. 101-405.

§ 329(d)—authorizes "structures and facilities … for wildlife water development projects, including guzzlers" if they enhance the wilderness values and "the visual impacts … can reasonably be minimized."

§ 329(e)—authorizes, in consultation with the state, zones and periods of no hunting, fishing, or trapping "for public safety, administration, or compliance with applicable laws."

§ 329(f)—requires a cooperative agreement with the state specifying "the terms and conditions under which the State … may use wildlife management activities in the wilderness areas."

§ 330—authorizes "such measures as may be necessary to control fire, insects, and diseases," consistent with the Wilderness Act.

§ 331—authorizes "the installation and maintenance of [hydrologic, meteorologic, or climatological] collection devices" if appropriate for "scientific, educational, and conservation purposes."

P.L. 110-229 (Consolidated Natural Resources Act of 2008)

§ 101(a)—designates one new USFS wilderness area with 106,000 acres in Washington.

§ 101(b)(1)—directs management in accordance with the Wilderness Act, subject to valid existing rights.

§ 101(b)(2)—requires consultation with interested parties to develop a trail plan "adjacent to or to provide access to" the wilderness.

§ 101(b)(3)—authorizes "helicopter access to construct and maintain a … telecommunications repeater site … for safety, health, and emergency services."

§ 101(b)(4)—authorizes continued use of floatplanes on one lake, subject to reasonable regulations.

§ 101(b)(5)—authorizes continued operation and maintenance of one lookout tower.

§ 101(c)(2)—requires "adequate access to private inholdings" within the wilderness.

P.L. 111-11—the Omnibus Public Land Management Act of 2009

Title I, Subtitle A—Wild Monongahela Wilderness

§ 1001(a)—designates three new USFS wilderness areas and three USFS wilderness area additions totaling 37,771 acres in West Virginia.

§ 1001(c)—directs management in accordance with the Wilderness Act, subject to valid existing rights.

§ 1001(c)—authorizes continuation of "the competitive running event permitted from 2003 through 2007 in the vicinity of the boundaries of the Dolly Sods Wilderness … in a manner compatible with the preservation of such areas as wilderness."

§ 1001(e)—directs that state jurisdiction over and responsibilities for fish and wildlife are unaffected.

Title I, Subtitle B—Virginia Ridge and Valley Wilderness

§ 1101(a)—amends P.L. 100-326 to designate six new USFS wilderness areas and six USFS wilderness area additions totaling 39,105 acres in Virginia.

§ 1102(b)—designates one USFS wilderness study area with 3,226 acres in Virginia.

§ 1103—designates one potential USFS wilderness area addition with 349 acres in Virginia. Directs management in accordance with the Wilderness Act, but authorizes, for "ecological restoration (including the elimination of nonnative species, removal of illegal, unused, or decommissioned roads, and any other activity necessary to restore the natural ecosystems in the potential wilderness area) … use of motorized equipment and mechanized transport" until the

area is added to the designated wilderness. Adds the area the existing wilderness when "the conditions … that are incompatible with the Wilderness Act … have been removed, or … five years after the date of enactment," whichever occurs sooner.

Title I, Subtitle C—Mt. Hood Wilderness, Oregon

§ 1202(a)—designates three new USFS wilderness areas and five USFS wilderness area additions totaling 124,240 acres in Oregon.

§ 1202(c)—designates three potential USFS wilderness area additions totaling 2,770 acres in Oregon. One is to be added when "the conditions in the potential wilderness area … are compatible with the Wilderness Act." The other areas are to be added when the specified land exchanges are completed.

§ 1202(e)—directs management in accordance with the Wilderness Act, subject to valid existing rights.

§ 1202(f)—states that the statute creates no buffer zone.

§ 1202(g)—directs that state jurisdiction over and responsibilities for fish and wildlife are unaffected.

§ 1202(h)—authorizes measures to control fire, insects, and diseases "subject to such terms and conditions as the Secretary determines to be desirable and appropriate."

§ 1202(i)—withdraws areas from public land laws, mining laws, mineral and geothermal leasing laws, and mineral material disposition.

Title I, Subtitle D—Copper Salmon Wilderness, Oregon

§ 1301(a)—amends P.L. 98-328 to designate one new USFS wilderness areas with 13,700 acres in Oregon.

Title I, Subtitle E—Cascade-Siskiyou National Monument, Oregon

§ 1405(a)—designates one new BLM wilderness area with 24,100 acres in Oregon.

§ 1405(c)(1)—directs management in accordance with the Wilderness Act, subject to valid existing rights.

§ 1405(c)(2)—authorizes measures to control fire, insects, and diseases "subject to such terms and conditions as the Secretary determines to be desirable and appropriate."

§ 1405(c)(3)—allows continued livestock grazing "if established before the date of enactment … subject to such reasonable regulations as are considered necessary by the Secretary," in accordance with the Wilderness Act and Appendix A of H.Rept. 101-405.

§ 1405(c)(4)—directs that state jurisdiction over and responsibilities for fish and wildlife are unaffected.

Title I, Subtitle F—Owyhee Public Land Management

§ 1503(a)—designates six new BLM wilderness areas totaling 517,025 acres in Idaho.

§ 1503(a)(3)—provides BLM release language for certain areas.

§ 1503(b)(1)—directs management in accordance with the Wilderness Act, subject to valid existing rights.

§ 1503(b)(2)—withdraws areas from public land laws, mining laws, mineral and geothermal leasing laws, and mineral material disposition.

§ 1503(b)(3)—allows continued livestock grazing "subject to such reasonable regulations, policies, and practices as the Secretary considers necessary," consistent with the Wilderness Act and Appendix A of H.Rept. 101-405. Requires "an inventory of existing facilities and improvements associated with grazing" and authorizes "fencing around wilderness areas … [as] appropriate to enhance wilderness values. Also authorizes the donation and termination of grazing leases or permits, in whole or in part.

§ 1503(b)(5)—requires "a trail plan that addresses hiking and equestrian trails."

§ 1503(b)(6)—authorizes "commercial services (including authorized outfitting and guide activities) … to the extent necessary for activities that fulfill recreational or other wilderness purposes" consistent with the Wilderness Act.

§ 1503(b)(7)—requires "adequate access to the property" for private landowners within the wilderness areas, consistent with the Wilderness Act.

§ 1503(b)(8)(A)—directs that state jurisdiction over fish and wildlife is unaffected.

§ 1503(b)(8)(B)—authorizes "any management activities that are necessary to maintain or restore fish and wildlife populations and habitats" if consistent with wilderness management plans and with Appendix B of H.Rept. 101-405. Also authorizes "the occasional and temporary use of motorized vehicles, if the use, as determined by the Secretary, would promote healthy, viable, and more naturally distributed wildlife populations that would enhance wilderness values while causing the minimum impact necessary to accomplish those tasks."

§ 1503(b)(8)(C)—authorizes state use of aircraft (including helicopters) "to survey, capture, transplant, monitor, and provide water for wildlife populations," consistent with the Wilderness Act and Appendix B of H.Rept. 101-405.

§ 1503(b)(9)—authorizes measures to control fire, insects, and diseases "subject to such terms and conditions as the Secretary determines to be desirable and appropriate."

§ 1503(b)(10)—states that the statute creates no buffer zone.

§ 1503(b)(11)—states that the statute is to have no effect on low-level military overflights, flight testing and evaluation, and new units of special use airspace and flight training routes.

§ 1503(b)(12)—directs that the designation "shall not create an express or implied reservation by the United States of any water or water rights for wilderness purposes."

Title I, Subtitle G—Sabinoso Wilderness, New Mexico

§ 1602(a)—designates one new BLM wilderness area with 16,030 acres in New Mexico.

§ 1602(c)(1)—directs management in accordance with the Wilderness Act, subject to valid existing rights.

§ 1602(c)(3)—allows continued livestock grazing "if established before the date of enactment" in accordance with the Wilderness Act and Appendix A of H.Rept. 101-405.

§ 1602(c)(4)—states that the statute is to have no effect on state jurisdiction over fish and wildlife.

§ 1602(c)(5)—requires "adequate access to inholdings" and identifies a particular tract of land to be "managed as an inholding in the Sabinoso Wilderness."

§ 1602(d)—withdraws areas from public land laws except exchanges under FLPMA, mining laws, mineral materials and geothermal leasing laws.

§ 1602(e)—provides BLM release language for certain areas.

Title I, Subtitle H—Pictured Rocks National Lakeshore Wilderness

§ 1652—designates one new NPS wilderness area with 11,740 acres in Michigan.

§ 1653(a)—directs management in accordance with the Wilderness Act, subject to valid existing rights.

§ 1653(b)—authorizes continued "use of boats powered by electric motors" on two specific lakes, "subject to any applicable laws (including regulations)."

§ 1654—states that the statute is to have no effect on any treaty rights, Lake Superior water management within the national lakeshore, or "the use of motors on the surface water of Lake Superior … [or] the beaching of motorboats at the line of demarcation" defined in § 1651(1).

Title I, Subtitle I—Oregon Badlands Wilderness

§ 1702(a)—designates one new BLM wilderness area with 29,301 acres in Oregon.

§ 1702(b)(1)—directs management in accordance with the Wilderness Act, subject to valid existing rights.

§ 1702(b)(3)—allows continued livestock grazing "if established before the date of enactment … subject to such reasonable regulations as are considered necessary by the Secretary" in accordance with the Wilderness Act and Appendix A of H.Rept. 101-405.

§ 1702(b)(4)—requires "adequate access" to private property.

§ 1702(c)—designates as potential wilderness a specific 25-foot wide corridor, with authorized nonconforming uses allowed to continue; adds the corridor to the wilderness when the nonconforming uses have terminated.

§ 1703—provides BLM release language for specified areas.

Title I, Subtitle J—Spring Basin Wilderness, Oregon

§ 1752(a)—designates one new BLM wilderness area with 6,382 acres in Oregon.

§ 1752(b)(1)—directs management in accordance with the Wilderness Act, subject to valid existing rights.

§ 1752(b)(3)—allows continued livestock grazing "if established before the date of enactment … subject to such reasonable regulations as are considered necessary by the Secretary" in accordance with the Wilderness Act and Appendix A of H.Rept. 101-405.

§ 1753—provides BLM release language for specified areas.

Title I, Subtitle K—Eastern Sierra and Northern San Gabriel Wilderness, California

§ 1802—designates five new USFS and BLM wilderness areas and three USFS wilderness area additions totaling 468,854 acres in California.

§ 1802(1)—states that the statute is to have no effect on "the ongoing activities of the adjacent United States Marine Corps Mountain Warfare Training Center."

§ 1803(a)—directs management in accordance with the Wilderness Act, subject to valid existing rights.

§ 1803(d)—withdraws areas from public land laws, mining laws, mineral and geothermal leasing laws, and mineral material disposition.

§ 1803(e)—authorizes measures to control fire, insects, and diseases in accordance with the Wilderness Act and H.Rept. 98-40. Directs amendment to local fire management plans for the areas. Requires "agency approval procedures … for responding to fire emergencies" and agreements with state and local firefighting agencies.

§ 1803(f)—requires "adequate access to the property to ensure the reasonable use and enjoyment" for private landowners within the wilderness areas.

§ 1803(g)—states that the statute is to have no effect on low-level military overflights, new units of special use airspace, or military flight training routes.

§ 1803(h)—allows continued livestock grazing, consistent with the Wilderness Act and Appendix A of H.Rept. 101-405.

§ 1803(i)(1)—authorizes "management activities to maintain or restore fish and wildlife populations and … habitats" if consistent with applicable wilderness management plans and carried out in accordance with applicable guidelines and policies.

§ 1803(i)(2)—directs that state jurisdiction over fish and wildlife is unaffected.

§ 1803(j)—states that the statute is to have no effect on horseback riding or use of recreational or commercial saddle or pack stock in the wilderness areas, in accordance with the Wilderness Act and "subject to any terms and conditions determined to be necessary by the Secretary."

§ 1803(k)—directs that outfitter and guide activities conducted under permits for the wilderness additions are to be added to any existing limits for those three wilderness areas.

§ 1804—provides BLM release language for specified areas.

Title I, Subtitle L—Riverside County Wilderness, California

§ 1851(b)(1)—designates five new USFS and BLM wilderness areas and five BLM, NPS, and USFS wilderness area additions totaling 146,242 acres in California.

§ 1851(b)(3)—states that the statute is to have no effect on "the construction, operation, or maintenance, using standard industry practices, of existing utility facilities located outside of the wilderness areas."

§ 1853(c)—designates one potential USFS wilderness area addition with 43,300 acres in California, managed "insofar as practicable as wilderness until such time as the land is designated as wilderness." Adds as wilderness upon *Federal Register* notice that "(A) all uses within the potential wilderness prohibited by the Wilderness Act … have ceased; and (B) sufficient inholdings … have been acquired to establish a manageable wilderness unit."

§ 1853(d)(1)—directs management in accordance with the Wilderness Act, subject to valid existing rights.

§ 1853(d)(3)—withdraws areas from public land laws, mining laws, mineral and geothermal leasing laws, and mineral material disposition.

§ 1853(d)(4)—authorizes measures to control fire, insects, and diseases in accordance with the Wilderness Act and H.Rept. 98-40. Directs amendment to local fire management plans for the areas. Requires "agency approval procedures … for responding to fire emergencies" and agreements with state and local firefighting agencies.

§ 1853(d)(5)—allows continued livestock grazing, consistent with the Wilderness Act and Appendix A of H.Rept. 101-405.

§ 1853(d)(6)—ensures access to one area "by members of an Indian tribe for traditional cultural purposes." Authorizes temporary closures to the general public "to protect the privacy of traditional cultural activities … [of] the smallest practicable area for the minimum period necessary for such purposes."

§ 1853(d)(7)—states that the statute is to have no effect on low-level military overflights, new units of special use airspace, or military flight training routes.

Title I, Subtitle M—Sequoia and Kings Canyon National Parks Wilderness, California

§ 1902—designates one new NPS wilderness area and one NPS wilderness area addition totaling 84,656 acres in California. Also designates one potential USFS wilderness area addition with 130 acres in California, to be added to the wilderness "upon termination of the non-conforming uses."

§ 1902(1)(B)—states that the statute is to have no effect on "(i) the cabins in, and adjacent to, Mineral King Valley; or (ii) the private inholdings known as Silver City and Kaweah Han.

§ 1902(1)(C)—states that the statute is to have no effect of the potential wilderness designation on "the operation, maintenance, and repair of the small check dams and water impoundments," including the use of helicopters, on four specified lakes.

§ 1902(3)—mandates no change to the management of areas in Sequoia and Kings Canyon National Parks previously recommended or proposed as wilderness.

§ 1903(a)—directs management in accordance with the Wilderness Act, subject to valid existing rights.

§ 1903(c)—directs continued "maintenance and access to hydrologic, meteorologic, and climatological devices, facilities and associated equipment consistent with" H.Rept. 98-40.

§ 1903(e)—states that the statute is to have no effect on horseback riding or use of recreational or commercial saddle or pack stock in the wilderness areas, in accordance with the Wilderness Act and "subject to any terms and conditions determined to be necessary by the Secretary."

§ 1904—authorizes appropriations of "such sums as are necessary to carry out this subtitle."

Title I, Subtitle N—Rocky Mountain National Park Wilderness, Colorado

§ 1952(a)—designates one new NPS wilderness area with 249,339 acres in Colorado.

§ 1952(c)—adds the potential wilderness identified on the specified map upon a *Federal Register* notice that "all uses inconsistent with the Wilderness Act … have ceased."

§ 1952(d)—specifies several areas explicitly excluded from the wilderness.

§ 1952(e)—directs management in accordance with the Wilderness Act, subject to valid existing rights.

§ 1952(f)—presents findings on water rights and directs that nothing in the subtitle "(A) constitutes an express or implied reservation by the United States of water or water rights for any purpose; or (B) modifies or otherwise affects any existing [federal] water or water rights."

§ 1952(g)—authorizes measures to control fire, insects, and diseases in accordance with "(1) the laws applicable to the Park and (2) Wilderness Act."

Title I, Subtitle O—Washington County, Utah

§ 1972(a)—designates 15 new BLM wilderness areas totaling 131,932 acres in Utah.

§ 1972(b)(1)—directs management in accordance with the Wilderness Act, subject to valid existing rights.

§ 1972(b)(2)—allows continued livestock grazing "where established before the date of enactment … subject to such reasonable regulations, policies and practices as the Secretary considers necessary," and consistent with the Wilderness Act and the guidelines in Appendix A of H.Rept. 101-405 and H.Rept. 96-617.

§ 1972(b)(3)—authorizes measures to control fire, insects, and diseases in accordance with the Wilderness Act.

§ 1972(b)(4)—states that the statute creates no buffer zone.

§ 1972(b)(5)—states that the statute is to have no effect on low-level military overflights, flight testing and evaluation, or new units of special use airspace or military flight training routes.

§ 1972(b)(7)—states that the statute is to have no effect on "(A) the rights of any Indian tribe; or (B) any tribal rights regarding access to Federal land for tribal activities, including spiritual, cultural, and traditional food-gathering activities."

§ 1972(b)(8)—authorizes "the installation and maintenance hydrologic, meteorologic, and climatological collection devices … if the Secretary determines that the facilities and access to the facilities are essential to flood warning, flood control, or water reservoir operations," in accordance with the Wilderness Act and "subject to such terms and conditions as the Secretary may prescribe."

§ 1972(b)(9)—directs that nothing "(i) shall constitute or be construed to constitute either an express or implied reservation by the United States of any water or water rights … (ii) shall affect any water rights in the State … (iii) shall be construed as establishing a precedent … (iv) shall affect the interpretation … of any other Act; or (v) shall be construed as limiting, altering, modifying, or amending any interstate compacts or equitable apportionment decrees that apportion water among and between the State and other States." Directs the Secretary to "follow the procedural and substantive requirements of the law of the State … to obtain and hold any water rights."

§ 1972(b)(10)—directs that state jurisdiction over fish and wildlife is unaffected and authorizes "management activities to maintain or restore fish and wildlife populations (including activities to maintain and restore fish and wildlife habitats)" if consistent with applicable wilderness management plans and carried out in accordance with the Wilderness Act and applicable guidelines and policies, "including applicable policies described in Appendix B" of H.Rept. 101-405.

§ 1972(b)(11)—authorizes "structures and facilities, including existing structures and facilities, for wildlife water development projects, including guzzlers … if (A) the structures and facilities will, as determined by the Secretary, enhance wilderness values by promoting healthy, viable, and more naturally distributed wildlife populations; and (B) the visual impacts of the structures and facilities on the wilderness areas can reasonably be minimized."

§ 1972(b)(12)—requires a cooperative agreement with the state specifying "the terms and conditions under which wildlife management activities in the wilderness areas … may be carried out."

§ 1972(c)—provides BLM release language for specified areas.

§ 1973—designates one new NPS wilderness area with 124,406 acres in Utah, subject to valid existing rights.

Title II, Subtitle E—Dominguez-Escalante National Conservation Area

§ 2403(a)—designates one new BLM wilderness area with 66,280 acres in Colorado.

§ 2403(b)—directs management in accordance with the Wilderness Act.

§ 2405(a)—withdraws areas from public land laws, mining laws, mineral and geothermal leasing laws, and mineral material disposition.

§ 2405(b)(2)—allows continued livestock grazing "if established before the date of enactment … subject to any reasonable regulations, policies and practices that the Secretary determines to be necessary," and in accordance with the Wilderness Act and the guidelines in Appendix A of H.Rept. 101-405.

§ 2405(e)(3)—authorizes measures to control fire, insects, and diseases "subject to such terms and conditions as the Secretary determines to be desirable and appropriate" and in accordance with the Wilderness Act.

§ 2405(h)(2)—directs the Secretary to "ensure that any water rights within the Wilderness required to fulfill the purposes … are secured in accordance with" state law and other specific provisions.

§ 2405(h)(3)—prohibits the President or "any other officer, employee, or agent of the United States … [to] fund, assist, authorize, or issue a license or permit for the development of any new irrigation and pumping facility, reservoir, water conservation work, aqueduct, canal, ditch, pipeline, well, hydropower project, transmission, or other ancillary facility, or other water diversion, storage, or carriage structure in the Wilderness," except for new livestock watering facilities in accordance the Wilderness Act and Appendix A of H.Rept. 101-405.

§ 2405(i)—directs that state jurisdiction over fish and wildlife is unaffected.

§ 2405(j)—directs that management is subject to valid existing rights.

Author Contact Information

Ross W. Gorte
Specialist in Natural Resources Policy
rgorte@crs.loc.gov, 7-7266

United States Department of the Interior

NATIONAL PARK SERVICE
1849 C Street, NW
Washington, DC 20240

DIRECTOR'S ORDER #41: WILDERNESS STEWARDSHIP

Approved: Jonathan B. Jarvis
Director

Effective Date: May 13, 2013

Duration: This Order will remain in effect until updated or rescinded

This Director's Order (DO #41) supplements *Management Policies 2006*, Chapter 6, Wilderness Preservation and Management. Together with Reference Manual 41 (RM 41), this Order supersedes and replaces any conflicting guidance issued previously.

Contents:

1. **Purpose of this Order**
2. **Authority**
3. **Roles and Responsibilities**
   - 3.1 Associate Director, Visitor and Resource Protection
   - 3.2 Wilderness Leadership Council
   - 3.3 Chief, Wilderness Stewardship Division
   - 3.4 Wilderness Training Manager
   - 3.5 Regional Directors
   - 3.6 Regional Wilderness Coordinators
   - 3.7 Superintendents
   - 3.8 Park Wilderness Coordinators
4. **Training Requirements**
5. **Identification and Designation of the Wilderness Resource**
   - 5.1 Wilderness Eligibility Assessment
   - 5.2 Wilderness Studies and Proposed Wilderness
   - 5.3 Recommended Wilderness
   - 5.4 Designated Wilderness
   - 5.5 Potential Wilderness
   - 5.6 Wilderness Boundaries
6. **Wilderness Stewardship**
   - 6.1 Consistency
   - 6.2 Wilderness Character
   - 6.3 Wilderness Planning
   - 6.4 Minimum Requirements
   - 6.5 Scientific Activities
   - 6.6 Climate Change
   - 6.7 Fire Management
   - 6.8 Abandoned Mine Lands
   - 6.9 Non-native Invasive Species
   - 6.10 Natural Sounds and Night Skies
   - 6.11 Air Quality
   - 6.12 Cultural Resources
   - 6.13 Native Americans and Consultation
   - 6.14 Interpretation and Education
   - 6.15 Naming of Geographic Features
7. **Wilderness Use Management**
   - 7.1 Persons with Disabilities
   - 7.2 Climbing
   - 7.3 Commercial Services
8. **Further Guidance**

---

1. Purpose of this Order

The purpose of this Director's Order is to provide accountability, consistency, and continuity in the National Park Service (NPS) wilderness stewardship program, and to guide servicewide efforts in meeting the requirements of the Wilderness Act (16 U.S.C. 1131-1136). This Order clarifies, where necessary, specific provisions of *Management Policies 2006* and establishes specific instructions and requirements.

This Order should be applied to wilderness stewardship actions carried out within the framework of park general management plans, wilderness stewardship plans, natural resource plans, cultural resource plans, fire management plans, and other activity-level plans.

TAKE PRIDE IN AMERICA

The NPS will apply the guidance contained in this Order to all of its wilderness stewardship activities. For the purpose of applying this guidance, unless specifically noted, the term "wilderness" includes the categories of eligible, proposed, recommended, and designated. Potential wilderness may be identified within the proposed, recommended or designated categories.

It is important to note that these policies may in some instances be superseded by statutory provisions that apply to individual wilderness areas, by rights reserved by former landowners and, in Alaska, by applicable provisions of the Alaska National Interest Lands Conservation Act (ANILCA).

2. Authority

Authority to issue this Order is contained in the NPS Organic Act (16 U.S.C. 1-4), and delegations of authority contained in the Department of the Interior Manual, Part 245. This Order is intended only to improve the internal management of the NPS, and is not intended to, and does not, create any right or benefit, substantive or procedural, enforceable at law or equity by a party against the United States, its departments, agencies, instrumentalities or entities, its officers or employees, or any other person.

3. Roles and Responsibilities

3.1 Associate Director, Visitor and Resource Protection

- oversee the NPS wilderness stewardship program and develop necessary standards and procedures;
- coordinate with the Associate Directors for Natural Resource Stewardship and Science; Park Planning, Facilities, and Lands; Cultural Resources, Partnerships and Science; and Interpretation and Education to enhance wilderness stewardship across disciplines throughout the NPS;
- issue, review, and revise as appropriate, RM 41, which will provide more detailed procedural guidance on administering the wilderness stewardship program; and
- represent the NPS on the Interagency Wilderness Policy Council.

3.2 Wilderness Leadership Council

- advise the Associate Director for Visitor and Resource Protection on all matters pertaining to wilderness and lead the agency in addressing critical wilderness stewardship issues; and
- assist the Wilderness Stewardship Division in developing and implementing programs and projects that improve the accountability, consistency, and continuity of wilderness stewardship.

3.3 Chief, Wilderness Stewardship Division

- provide goals and direction to the wilderness stewardship program as approved by the Associate Director;
- assist the Director with national policy review and responses to congressional inquiries;
- maintain the servicewide wilderness database for wilderness status, acreage, wilderness character, stewardship planning, training, and other pertinent information;
- develop an annual wilderness report;

- facilitate communication throughout all levels and disciplines of the NPS;
- maintain communication with the Wilderness Leadership Council, sharing information on national issues, challenges, and opportunities;
- serve as the NPS representative on the Interagency Wilderness Steering Committee; and
- oversee NPS involvement with the Arthur Carhart National Wilderness Training Center (ACNWTC) and the Aldo Leopold Wilderness Research Institute (ALWRI).

3.4 Wilderness Training Manager

- serve as the NPS representative to the ACNWTC;
- develop and maintain a strategic plan for wilderness training;
- develop, conduct, and track wilderness stewardship training, and track accomplishments; and
- provide information and advice on wilderness stewardship issues to park, regional, and program area staffs.

3.5 Regional Directors

- strive to ensure that wilderness coordination needs within their regions are met, and that parks with wilderness resources are adequately staffed to meet their wilderness-related responsibilities;
- see that eligibility determinations and studies are complete for parks within their region and on any new roadless areas as soon as practicable after these areas are acquired;
- transmit wilderness eligibility determinations to the Director for final approval;
- ensure that all wilderness parks establish a wilderness character baseline, and that wilderness character is integrated into park planning, management, and monitoring;
- ensure that all superintendents and deputy superintendents of parks with wilderness receive ACNWTC Wilderness Stewardship Training within two years of assuming their duties; and
- ensure that superintendents manage wilderness according to the Wilderness Act and appropriate NPS policy documents.

3.6 Regional Wilderness Coordinators

- promote consistency in wilderness stewardship, provide policy interpretation in their region;
- facilitate wilderness training to staff throughout the region;
- provide communication between the multiple levels and disciplines of the wilderness stewardship program; and
- provide information and advice on wilderness stewardship issues to park, regional, and program area staffs.

3.7 Superintendents

- protect wilderness character by adhering to the Wilderness Act and NPS guidance documents;
- establish an interdisciplinary approach to wilderness stewardship;
- designate a park wilderness coordinator with a percentage of time dedicated to wilderness stewardship appropriate to the size and complexity of the wilderness park;

- ensure that park staff has necessary training and skills to be effective wilderness stewards;
- complete eligibility assessments and wilderness studies;
- complete and maintain Wilderness Stewardship Plans[1];
- monitor plans and operations to ensure compliance with the Wilderness Act;
- ensure wilderness character baseline is established and trends monitored;
- ensure that a minimum requirements process is applied for all actions that could potentially affect wilderness character;
- ensure wilderness character impacts are addressed in National Environmental Policy Act (NEPA) compliance documents;
- ensure proposals for scientific activities in wilderness are evaluated and monitored by park wilderness coordinators;
- incorporate wilderness education into park programs;
- participate in interagency wilderness stewardship coordination; and
- attend ACNWTC Wilderness Stewardship Training within two years of assuming their duties.

3.8 Park Wilderness Coordinators

- work with superintendent to facilitate the integration of wilderness character into park planning, management/operations, and monitoring;
- provide advice on wilderness issues to park staffs;
- coordinate eligibility assessments and wilderness studies;
- develop and maintain Wilderness Stewardship Plans;
- establish wilderness character baseline and monitor trends;
- coordinate and assist in minimum requirements analysis, including the documentation and tracking of all decisions;
- assess wilderness effects in NEPA and National Historic Preservation Act (NHPA) compliance documents, and participate in other planning efforts which involve wilderness resources;
- evaluate proposals for scientific activities in wilderness and monitor effects on wilderness character;
- incorporate wilderness education into park programs; and
- participate in local interagency wilderness stewardship coordination.

4. Training Requirements

Park superintendents and deputy superintendents are required to attend ACNWTC Wilderness Stewardship Training within two years of coming to any park with wilderness. Superintendents and deputy superintendents must ensure that park personnel have the appropriate wilderness training and skills to be effective wilderness stewards. Associate directors and regional directors should encourage senior staff from visitor and resource protection, planning, facilities management, natural resource stewardship and science, cultural resources management, and

[1] Within *Management Policies 2006*, the "wilderness stewardship plan" is referred to as the "wilderness management plan." The meaning is the same for both.

interpretation and education, as well as select staff from regional directorates, program areas, and service centers to attend wilderness stewardship training.

5. Identification and Designation of the Wilderness Resource

Parks must make a documented determination of whether lands will be considered eligible for inclusion in the National Wilderness Preservation System. This documented determination should be undertaken using an interdisciplinary approach. The first requirement is an agency's evaluation of lands to determine eligibility based on the statutory definition of wilderness, and outlined as primary criteria in *Management Policies 2006*, Section 6.2.1.1. For eligible lands, the second requirement is a wilderness study, with public involvement, followed by an agency proposal, Secretarial recommendation, and the President's suitability recommendation to Congress.

5.1 Wilderness Eligibility Assessments

Parks with lands possessing wilderness characteristics must complete eligibility assessments to identify lands for possible inclusion in the National Wilderness Preservation System. The eligibility assessment is a general evaluation of park lands as a preliminary step to the wilderness study. In preparing an assessment, the park will consider existing park information, such as general management plans, foundation documents, development plans, natural resource plans, and cultural resource plans. This internal process includes two public notifications. The first notification documents an intention to conduct the eligibility assessment. The second notification provides notice of the Director's approval of the findings and determination of eligibility or ineligibility in the park's assessment.

Lands that are determined to be eligible for wilderness will be managed to preserve their wilderness character. Lands that are determined to be ineligible will be managed in accordance with the NPS Organic Act and all other laws, executive orders, regulations, and policies applicable to non-wilderness areas of the national park system.

Some parks, faced with the need to complete an initial eligibility assessment, may decide to include this step within a wilderness study. The assessment would be completed as an initial step in the study process. The findings in the assessment would then be subject to the more comprehensive evaluation required for the wilderness study, including the requirement for public review and comment.

Lands initially determined to be eligible in the eligibility assessment will be further evaluated in the wilderness study to determine whether they should be proposed by the NPS for designation as wilderness.

5.2 Wilderness Studies and Proposed Wilderness

Formal wilderness studies are used to inform decisions on areas contemplated for wilderness designation. These studies include field work, the identification of alternatives, review under the National Historic Preservation Act (16 U.S.C. 470f), analysis of impacts, public involvement and comment. As a result, the land identifications made in the eligibility assessment may be changed, and may result in more or less land advancing in the wilderness designation process.

The initial determination of eligibility is used as a starting point for the wilderness study. A completed wilderness study may result in revised eligibility determinations. The next step entails the NPS using the results of the wilderness study to submit a proposal for wilderness

designation from the Director to the Secretary of the Interior (Secretary). Throughout the study process, eligible lands continue to be managed to preserve their eligibility for designation by protecting their wilderness character.

Wilderness studies involve a much more intensive review than an eligibility assessment, as demonstrated by the preparation of an environmental impact statement and Record of Decision (ROD). The authority to sign the ROD on a wilderness study is delegated to the NPS Regional Director, and notice of the ROD is published in the Federal Register. The ROD identifies lands to be forwarded to the Director for a wilderness designation proposal. If any historic properties are included in the proposal, the ROD will identify the historic properties and will provide an assessment of effects of the proposed designation, per 36 CFR Part 800. The wilderness study serves as the basis for the Director to propose wilderness designation to the Secretary.

The Secretary (through the Assistant Secretary for Fish and Wildlife and Parks) then reviews the bureau's proposal, and makes his/her determination of suitability and nonsuitability. The Secretary's suitability determination forms the basis for a recommendation to the President. It is possible that the Secretary's determination will change the proposal put forward by the Director.

Lands originally considered as eligible, and proposed by the Director for wilderness designation, become proposed wilderness and are managed as if they were wilderness. Lands considered eligible, but not proposed, are managed to preserve their eligibility for designation by protecting their wilderness character. Lands determined ineligible through the wilderness study will be managed according to the NPS Organic Act and all other laws, executive orders, regulations, and policies applicable to non-wilderness areas of the national park system.

Wilderness proposals resulting from a formal wilderness study will be reviewed and approved by the Director before being forwarded to the Secretary (through the Assistant Secretary's office).

Notification and coordination with the WASO Wilderness Stewardship Division should occur early in this wilderness study process.

5.3 Recommended Wilderness

Once a wilderness study is completed and a proposal is transmitted from the Director, it becomes the Secretary's responsibility under the Wilderness Act to make a recommendation to the President as to suitability or nonsuitability for designation as wilderness. Lands that the Secretary recommends as suitable for designation as wilderness will be managed as if they were wilderness. Lands that have been proposed by the Director, but not recommended by the Secretary, will be managed to preserve their wilderness character.

5.4 Designated Wilderness

Once the President sends the recommendation to both houses of Congress for formal consideration, Congress may enact legislation to include the area in the National Wilderness Preservation System as designated or potential wilderness. Lands designated as wilderness by Congress will be managed as wilderness in accordance with the Wilderness Act and NPS policy. Lands released by Congress from further consideration will be managed in accordance with the NPS Organic Act and all other laws, executive orders, regulations, and policies applicable to non-wilderness areas of the national park system.

5.5 Potential Wilderness

When Congress provides for the designation of potential wilderness lands it also provides the process for the lands to become designated wilderness upon the elimination of the pre-existing nonconforming uses. Pre-existing nonconforming uses might include reserved use and occupancy interests, a road, a structure, or an installation. The National Park Service will seek to remove nonconforming uses that preclude wilderness designation. This process normally provides for the potential wilderness to become designated wilderness upon the elimination of the nonconforming use and the Secretary publishing a Notice in the Federal Register that these lands now meet the qualifications of designation. In limited situations, Congress may also designate in wilderness legislation non-federally owned lands, generally inholdings, as potential wilderness pending Federal acquisition.

5.6 Wilderness Boundaries

Final boundaries of designated wilderness have the full force and effect of Federal law and may be modified only through the legislative process. Wilderness boundaries should be established so they are easily identifiable on the ground. Unless otherwise defined by Congress when the area is designated, the standard boundary setbacks from roads, paved and unpaved, should be 100 feet on land from either side of the centerline. Exceptions to these standards may be proposed on a case-by-case basis to accommodate environmental protection or safety considerations. Any deviation from the standard should be documented on the map and in the legal description that is filed with Congress.

For lands that are designated wilderness, legal descriptions and maps must be filed with Congress, the Wilderness Stewardship Division in WASO (2 copies), the appropriate regional office (2 copies), and at the park. The Associate Director will include in RM 41 further instructions and standards for mapping and otherwise documenting eligible, proposed, recommended, and designated wilderness.

6. Wilderness Stewardship

The goal of wilderness stewardship is to keep these areas as natural and wild as possible in the face of competing purposes and impacts brought on by activities that take place elsewhere in the park and beyond park boundaries. NPS employees should understand this goal, work together and engage other agencies and partners to provide for an enduring resource of wilderness.

6.1 Consistency

Interagency cooperation and coordination is desirable to minimize administrative differences and visitor confusion and to ensure that wilderness resources receive maximum protection. At the national level this will be accomplished through the work of the NPS Wilderness Stewardship Division, Interagency Wilderness Policy Council, Interagency Wilderness Steering Committee, NPS Wilderness Leadership Council, ACNWTC, and ALWRI. Regional staff with wilderness responsibilities should be engaged with their counterparts from the other wilderness management agencies and other appropriate government organizations. Superintendents will ensure that wilderness stewardship within their parks is coordinated with surrounding Federal, State, and local land managers; federally recognized Indian Tribes, Alaska Natives, and Native Hawaiian Organizations; and with other public and private organizations, as appropriate.

In areas where NPS wilderness adjoins wilderness administered by another land management agency, the superintendent must coordinate with land managers of adjacent wilderness units to achieve consistency on regulations, requirements, and management techniques. While the goal is to mitigate problems resulting from the differing agency missions and stewardship, the NPS will not adopt any practice that weakens or compromises the preservation of wilderness within the parks or the parks' fundamental purposes as described in enabling legislation and *Management Policies 2006*. Where appropriate, NPS wilderness stewardship and education programs should explain reasons for differences among neighboring agencies' wilderness stewardship practices.

6.2 Wilderness Character

The Wilderness Act (16 U.S.C. 1133(b)) directs that "each agency administering any area designated as wilderness shall be responsible for preserving [its] wilderness character." Wilderness character is the combination of biophysical, experiential, and symbolic ideals that distinguishes wilderness from other lands. The five qualities of wilderness character are (1) untrammeled, (2) undeveloped, (3) natural, (4) offers outstanding opportunities for solitude or primitive and unconfined recreation, and (5) other features of scientific, educational, scenic, or historical value. Accordingly, each wilderness park will integrate the concept of wilderness character into park planning, management, and monitoring in order to preserve the enduring benefits and values of wilderness for future generations.

Whenever a park planning process that has the potential to affect wilderness character occurs, the park should determine how wilderness character can be both integrated into the planning effort and presented in the planning document. As a foundation, wilderness parks should develop a wilderness character narrative which describes what is unique and special about a specific wilderness, organized by each of the qualities of wilderness character.

Day-to-day management decisions and actions made within a park can significantly affect or be influenced by wilderness character. Wilderness character should be considered in the management and operations conducted by all divisions/work units (e.g., natural and cultural resources management, facilities management, interpretation and education, resource and visitor protection, environmental compliance, and commercial services).

Wilderness parks will conduct a wilderness character assessment, which includes identifying what should be measured, establishing baseline data, and conducting ongoing monitoring of trends. Each measure should be relevant to tracking change in an attribute or element of the park's wilderness character, or relevant to tracking a threat to this attribute. Once a baseline is established, tracking change and reporting on the trend in wilderness character should generally occur every five years.

Specifics on integrating wilderness character into park planning, management, and monitoring can be found in the *NPS Wilderness Character User Guide*, a component of RM 41.

6.3 Wilderness Planning

For every designated wilderness, a Wilderness Stewardship Plan will guide management actions to preserve wilderness character. Parks should notify the WASO Wilderness Stewardship Division Chief and work with their Regional Wilderness Coordinator during the Wilderness Stewardship Planning process. Parks with lands determined to be eligible, proposed, or recommended should also develop plans to preserve wilderness character. Wilderness

Stewardship Plans should be completed within two years of designation, subject to funding. Preservation of wilderness character will be incorporated into appropriate sections of park planning and management documents. Also see *Management Policies 2006*, Section 6.3.4.2.

6.4 Minimum Requirements

Parks must complete a "minimum requirements analysis" (MRA) in order to document the determination of whether a proposed action (project), which involves a prohibited use, is necessary to meet minimum requirements for the administration of the area for the purpose of wilderness. The Wilderness Act in Section 4 (c) identifies the prohibitions (codified at 16 U.S.C. 1133(c)) and Section 2 describes the purpose of wilderness (codified at 16 U.S.C. 1131).

Parks must first determine if the action (project) is necessary for the administration of the wilderness area, to realize the purpose of wilderness. Once the action (project) is determined necessary, parks must next determine the activity (method or tool) to accomplish the action (project) with the least negative impact to wilderness. This MRA should be undertaken using an interdisciplinary approach that includes the project lead, wilderness manager, resource specialists, and superintendent.

NPS Management Policies provide that a MRA must also be applied to all other administrative actions (projects) within wilderness that could potentially affect wilderness character. Also, whenever an environmental assessment or environmental impact statement is prepared for work projects within wilderness, a MRA should be included as part of the document.

Under no circumstances may a MRA be used to allow permanent roads or commercial enterprise within wilderness. The use of motorized equipment and the establishment of management facilities are specifically prohibited when other reasonable alternatives are available.

For newly designated wilderness, parks will prepare a MRA, along with an NHPA Section 106 Determination, to evaluate the retention or removal of administrative facilities, structures, and installations.

Parks in Alaska must consult RM 41 to ensure that their minimum requirement analysis process is consistent with the provisions of ANILCA.

The Associate Director will ensure that additional information, guidance, and detail on applying the MRA are included in RM 41.

6.5 Scientific Activities

The scientific value of wilderness is derived from the preservation of wilderness character. These areas can provide a baseline for study of natural and cultural resources and other related values such as soundscapes and night skies. Wilderness research can help provide a scientific and scholarly basis for wilderness planning, operations, management, interpretive, and education activities.

Scientific activities will be encouraged in wilderness, provided that the benefits of what may be learned outweigh the negative impacts to wilderness character. Managers need to be aware of, and guard against, cumulative effects from simultaneously occurring projects. It is important for scientists to understand that the conduct of their research should be in accord with wilderness preservation principles. Applications for research and other scientific work in wilderness should demonstrate a positive benefit to wilderness or wilderness purposes, and must include a MRA of

the project's methods. Monitoring systems must be implemented to ensure wilderness character is preserved.

Superintendents must use a documented process to determine appropriateness of proposed scientific activities. They should also develop and maintain a comprehensive database to track all scientific activities within the wilderness and their cumulative impact to wilderness character. This database should include an annual certification of continuing need for data collection. The park is responsible for ensuring the removal of scientific equipment by investigators at the end of the authorized research period.

6.6 Climate Change

Climate change will have long-range effects on all aspects of ecosystem function. Wilderness managers and superintendents should collaborate across program areas to develop flexible, sustainable strategies that uphold wilderness values and integrate with park, regional, and national level responses. These strategies must account for any effects on wilderness character from actions taken or not taken.

Superintendents and wilderness staff should fully participate and be leaders in efforts to increase landscape connectivity, improve ecosystem resilience through the reduction of the influence and negative impact of humans on the ecosystem, engage in interagency management collaboration, consider appropriate scientific research, and create relevant climate change communication products.

6.7 Fire Management

Firefighter and public safety are the first priorities in every fire management activity. However, wilderness character must be fully considered during all fire management actions beginning with the development of the Fire Management Plan (FMP) and continuing through the management of individual wildfires and implementation of fuel treatments and post-fire actions. A FMP is required for each park with burnable vegetation. It defines objectives, management requirements, ecological considerations, and potential strategies and tactics for safely managing fire in order to meet overall land management and wilderness objectives. The FMP considers values that require protection from fire (e.g., structures, cultural resources, and other values) as well as those that may benefit from fire within and outside of wilderness.

In many NPS wilderness areas, fires resulting from natural ignitions are considered a natural process that contributes to ecosystem function and is necessary to maintain wilderness in an unimpaired condition. As a result of many factors including past fire management practices within wilderness and the need to control wildfires on adjacent lands, fire may not be adequately functioning as a natural change agent. In those cases, augmenting natural ignitions with prescribed fire or other fuel treatments within wilderness may be necessary to restore or maintain ecological function if that is a goal identified in the park's Wilderness Stewardship Plan or FMP.

To ensure adequate consideration of wilderness resources, a programmatic MRA must be completed as part of the development of the park's FMP and companion environmental compliance document. The programmatic MRA must address management strategies for wildfires and fuel treatments in wilderness. The programmatic statement will establish the need for potential fire management actions in wilderness and will provide guidance for implementing initial wildfire responses. The analysis should specify the minimum activities (strategies, methods, and tools) that are generally permitted for managing wildfires, implementing fuels

treatments, and conducting post-fire activities. For management of long-duration wildfires, an incident specific minimum requirements analysis should be considered to evaluate the methods and tools being applied to manage the event. The analysis should be periodically reviewed throughout the incident to ensure that appropriate strategies, methods, and tools are being used to protect wilderness character.

A MRA must also be developed as part of a Burned Area Emergency Response (BAER) plan for actions in wilderness that are proposed to restore, stabilize, or rehabilitate an area following a wildfire.

Project plans for fuels treatments in wilderness must address the minimum requirement. Project plans should refer to the programmatic MRA developed for the FMP that establishes the necessity for such treatments. If the proposed treatment is confirmed to be within the framework of the programmatic MRA, the project plan is not required to revisit that decision. However, each project plan must contain an analysis of the minimum methods and techniques necessary to accomplish the specific action with the least negative impact to wilderness character.

The application of Minimum Impact Strategies and Tactics (MIST) is required for all fires in wilderness. Qualified wildland fire Resource Advisors should be utilized throughout wildfire incidents, and post-fire activities including emergency stabilization and BAER. Resource advisors must be knowledgeable about wilderness values, objectives, and policies.

A delegation of authority from the park superintendent to an Incident Commander will include appropriate emphasis on the protection of wilderness resources and character, and the minimum requirements concept. Fire management resources must be adequately briefed on the concepts of wilderness stewardship and held accountable for preservation of wilderness character. They must be made aware of specific protections and constraints contained in the park's Wilderness Stewardship Plan and FMP.

Parks lacking an approved FMP must suppress all wildfires in a method that is commensurate with values to be protected and with consideration for the principles of risk management. While parks lacking an approved FMP may not use resource objectives as a primary consideration when selecting a suppression strategy for a wildfire, the impacts of suppression alternatives on wilderness character and other resource values must be considered when response strategies are developed and decisions are approved. Parks lacking an approved FMP may not implement prescribed fire projects. Also see *Management Policies 2006*, Section 6.3.9 and Director's Order #18: Wildland Fire Management.

6.8 Abandoned Mine Lands

Abandoned mine lands, adits, shafts and wells will be evaluated for closure or restoration using the MRA, which includes consideration of public safety, natural and cultural resources, and wilderness character.

6.9 Non-native Invasive Species

Non-native invasive plant and animal species must not be brought into wilderness. Parks should be managed with the goal of early detection and rapid response in areas adjacent to wilderness to prevent the spread into wilderness. Parks should have information and programs to inform the visiting and non-visiting public about the impacts of non-native invasive plants and animals and how to prevent their introduction and spread. Regulations (e.g., requiring certified weed-free

hay, grain and hay cubes for stock) may need to be put in place within a park's compendium in order to prevent the introduction and spread of non-native invasive species.

Parks should use Integrated Pest Management (IPM) to guide invasive species planning and implementation and develop management plans using IPM that may require NEPA and minimum requirements compliance. Elements include prevention, inventory, prioritization, treatment, monitoring, research, education, and outreach. An inventory and assessment of non-native invasive species should be conducted before any treatment actions are proposed. The objective of treatment within wilderness should be the eradication of the invasive species. If eradication is not feasible, the objective of treatment should be to contain the invasion, preventing spreading.

The management of non-native invasive species can result in both positive and negative impacts to wilderness character. A MRA will be conducted on proposed actions to inventory, monitor, control or eradicate non-native invasive species. The MRA will be the basis for managers to determine if the proposed action is necessary and will identify the management activity which has the least negative impact on wilderness. Also see *Management Policies 2006,* Section 4.4.1.

6.10 Natural Sounds and Night Skies

Opportunities to hear the sounds of nature and view the night sky are important components of wilderness character. Experiencing natural soundscapes and viewing night skies unmarred by human-caused noise and light is critical to the primeval character of wilderness, giving the visitor a sense of remoteness and solitude. Wilderness provides us with moments of quiet reflection to experience the natural rhythms of sound in the wild and inspires us to contemplate the mysteries of a star-filled sky, experiences that are rapidly disappearing in the modern world. Anthropogenic noise and light travel long distances. In many wilderness areas, the only perceptible human influence on the landscape is the noise and light from human activity, often occurring many miles away. Effective management of wilderness should involve careful attention to these important resources. Also see *Management Policies 2006,* Section 4.9.

6.11 Air Quality

Managers must protect air quality related values (AQRVs) in wilderness. Managers should define AQRVs for each wilderness, select sensitive indicators, collect baseline data, establish a long-term monitoring program to track changes, and establish the acceptable level of protection needed to protect AQRVs. Proposals for the use of temporary instrumentation to monitor AQRVs will be evaluated using a MRA. Managers should rely on instrumentation outside of the wilderness to the extent possible.

Managers must ensure that agency actions conform to the air pollution regulations and do not contribute to long-term negative impacts to wilderness air quality. Managers will be responsible for reducing the impacts of smoke from wildland fires in wilderness, while understanding and promoting the need to re-introduce the natural role of fire into wilderness ecosystems. As community leaders in environmental stewardship, managers are committed to using sustainable practices in parks that will reduce air pollution, such as the use of alternative energy sources (e.g., solar power, wind energy, and alternative fuels). Interpretation of these and other sustainable practices in parks will help educate visitors on ways they can reduce their contribution to air pollution.

The NPS has no direct permitting or enforcement authority over air pollution sources. Managers will work with Federal and State regulatory agencies to identify air pollution effects and develop protection strategies. Managers should be involved in local and State air quality planning and permitting processes. Managers should review proposed emission source projects with the potential to impact wilderness and make recommendations to mitigate the impacts of these sources.

6.12 Cultural Resources

Wilderness may contain features of scientific, educational, scenic, and historical values that are also cultural resources. There has been prior human use in all areas now designated as wilderness, resulting in archeological sites, historic structures, cultural landscapes, and associated features, objects, and traditional cultural properties located in many wilderness areas that contribute to our appreciation of wilderness. It is important to recognize that all laws intended to preserve our cultural heritage are applicable in wilderness and must be applied in concert with the Wilderness Act. Also see *Management Policies 2006*, Section 6.3.8.

NPS managers must maintain an affirmative cultural resource management program in wilderness, but these sites must additionally be treated in a manner that preserves other wilderness resources and character. Measures to protect and inventory cultural resources in wilderness must comply with the Wilderness Act provisions for minimum requirements analysis.

Cultural resource specialists must fully participate in the development of a park's Wilderness Stewardship Plan. Wilderness stewardship specialists must fully participate in the development of a park's cultural stewardship plan when cultural resources are present in wilderness. In keeping with the Secretary of the Interior's Standards for managing cultural resources, a variety of management actions may be taken, including restoration or stabilization of a site or property, or professional level documentation and removal after appropriate steps have been taken to comply with the National Historic Preservation Act (16 U.S.C. 470f). Parties interested in the historic preservation issue(s) must be consulted, including but not limited to, appropriate tribal government officials, including Tribal Historic Preservation Officers, Alaska Natives, and Native Hawaiian Organizations, State Historic Preservation Officers and, if necessary, the Advisory Council on Historic Preservation.

6.13 Native Americans and Consultation

For Native Americans, wilderness can be a homeland or a place of profound tribal history or traditional use. Managers must engage in government-to-government consultation with associated federally recognized Indian Tribes to assist in culturally sensitive wilderness stewardship. Uses of wilderness in a park may be subject to a treaty right by a formerly occupying tribe to engage in certain activities. Various laws and executive orders reflect our nation's respect for the strongly held tribal relationships to places in wilderness. Additionally, Executive Order 13175 and the Department of the Interior Policy on Consultation with Indian Tribes require that the National Park Service conduct government-to-government consultations with federally recognized Indian Tribes when undertaking any Federal action that may have a direct impact on tribes or tribal lands. Federal actions include policy, guidance, and/or operational activity that affect tribal cultural practices, lands, resources, or access to traditional areas of cultural or religious importance on federally managed lands. Tribes may have concerns about natural and cultural resources that may not necessarily be addressed during the Section 106 process. Also see *Management Policies 2006*, Sections 1.11 and 8.5.

6.14 Interpretation and Education

The Comprehensive Interpretive Plan for parks with proposed, recommended, or designated wilderness should include and address the primary park interpretive themes that reflect the wilderness. Wilderness significance statements and interpretive themes can be found in the NPS Wilderness Education and Partnership Plan, developed by the Wilderness Leadership Council. Wilderness character, resources and stewardship should be included in the park's interpretation, education, and outreach programming and should be included as an integral component of the park's long-range interpretive plan and annual implementation plan.

Staff education is an integral part of wilderness stewardship. Therefore, wilderness awareness training will be incorporated into all appropriate training programs for park staff, including seasonal staff, cooperating association employees, concessions employees, and volunteers.

Leave No Trace (LNT) principles and practices will be applied to all forms of recreation management within wilderness. LNT principles should be incorporated into interpretive activities and products such as hikes, talks, brochures, maps, and websites. All commercial guides leading trips into wilderness should attend LNT workshops and be required to incorporate LNT into their trips. Park staff who work in wilderness should attend LNT workshops and training. Also see *Management Policies 2006*, Sections 6.4.2 and 7.1.

6.15 Naming of Geographic Features

The U.S. Board on Geographic Names governs the naming of geographic features and has the authority to approve or disapprove any request to name a feature within wilderness. As stated in the Board's Principles, Policies, and Procedures, the Board will not approve proposed names unless an overriding need exists, such as for purposes of safety, education, or area administration. To maintain the untrammeled character of wilderness, the NPS will not propose to the Board, or support proposals by others, to apply new names to geographic features within any category of wilderness. A rare exception to this policy may be considered on a case-by-case basis when a proposed name: (a) has a direct influence on the safety of persons within the area; (b) serves a useful wilderness interpretive or educational purpose; or (c) is linked to an historical figure, activity, incident, or resource having a direct association with the geographic feature; and (d) meets all other NPS and Board policies applicable to geographic naming. The NPS Office of Policy coordinates with the Board and should be consulted on naming issues relating to wilderness. Also see *Management Policies 2006*, Section 9.6.3.

7. Wilderness Use Management

7.1 Persons with Disabilities

While section 507(c) of the Americans with Disabilities Act (ADA) (42 U.S.C. 12207(c)) allows for the use of wheelchairs in wilderness, it also states that "no agency is required to provide any form of special treatment or accommodation, or to construct any facility or modify any condition of lands within a wilderness area in order to facilitate such use." Nevertheless, the NPS is committed to providing opportunities for appropriate enjoyment of wilderness by persons with disabilities.

Wheelchairs (whether manually operated or power-driven) are allowed in wilderness if they meet the definition in the ADA: "…a device designed solely for use by a mobility-impaired person for

locomotion, that is suitable for use in an indoor pedestrian area." The device must also be a person's primary mode of locomotion.

The NPS will allow service animals within wilderness when their use is required. Department of Justice (DOJ) regulations (28 CFR Part 36), implementing the ADA define a service animal as any dog that is individually trained to do work or perform tasks for a person with a disability. Other species of animals are not service animals for the purpose of this definition. The training of service animals in wilderness may be allowed if it does not negatively impact wilderness character and only in areas specifically designated for pets by the park superintendent.

The Wilderness Access Decision Tool publication provides further guidance in assisting managers in making appropriate, objective, and consistent decisions regarding the use of wilderness by persons with disabilities. Managers should ensure that decisions concerning wilderness use do not inadvertently discriminate against persons with disabilities. Also see *Management Policies 2006*, Section 6.4.10 and RM 41.

7.2 Climbing

For the purpose of this Order, climbing is defined to include rock climbing, snow and ice climbing, mountaineering, canyoneering, and caving, where climbing equipment, such as ropes and fixed or removable anchors, is generally used to support an ascent or descent. The NPS recognizes that climbing is a legitimate and appropriate use of wilderness. However, any climbing use or related activity must be restricted or prohibited when its occurrence, continuation, or expansion would result in unacceptable impacts to wilderness resources or character, or interfere significantly with the experience of other park visitors.

If climbing activities occur in wilderness, climbing management strategies will be included as part of the park's Wilderness Stewardship Plan, or other activity-level plan. Wilderness parks with climbing use will exchange information on best practices, work together on servicewide implementation, and communicate with stakeholders and wilderness users. Wilderness climbing education and impact monitoring will be important components in climbing management programs. It is recognized that the use of removable anchors may reduce, but does not in every case completely eliminate, the need for fixed anchors. The occasional placement of a fixed anchor for belay, rappel, or protection purposes does not necessarily impair the future enjoyment of wilderness or violate the Wilderness Act. However, climbing practices with the least negative impact on wilderness resources and character will always be the preferred choice.

The establishment of bolt-intensive face climbs is considered incompatible with wilderness preservation and management due to the concentration of human activity which they support, and the types and levels of impacts associated with such routes. Climbing management strategies will address ways to control, and in some cases reduce, the number of fixed anchors to protect the park's wilderness resources or to preserve the "untrammeled," "undeveloped," and "outstanding opportunities for solitude" qualities of the park's wilderness character.

Fixed anchors or fixed equipment should be rare in wilderness. Authorization will be required for the placement of new fixed anchors or fixed equipment. Authorization may be required for the replacement or removal of existing fixed anchors or fixed equipment. The authorization process to be followed will be established at the park level and will be based on a consideration of resource issues (including the wilderness resource) and recreation opportunities. Authorization may be issued programmatically within the Wilderness Stewardship Plan or other

activity-level plan, or specifically on a case-by-case basis, such as through a permit system. Prior to the completion of the park's Wilderness Stewardship Plan or other activity-level plan, the park superintendent may approve new fixed anchors or fixed equipment on a case-by-case basis.

If unacceptable impacts are occurring in wilderness as a result of climbing, the park superintendent may deem it necessary to restrict or prohibit the placement of fixed anchors. Proposals for the placement of fixed anchors or fixed equipment for the administrative purpose of facilitating future rescue operations must be evaluated through a MRA.

"Clean climbing" techniques should be the norm in wilderness. This involves the use of temporary equipment and anchors that can be placed and removed without altering the environment (e.g. slings, cams, nuts, chocks, and stoppers). Practices such as gluing or chipping holds, and damaging or removing vegetation on or at the base of climbing routes, are prohibited by NPS regulations (36 CFR 2.1). The use of motorized equipment (e.g. power drills) is prohibited by the Wilderness Act and NPS regulations (36 CFR 2.12). Climbers are encouraged to adopt Leave No Trace principles and practices for all climbing activities, including packing out all trash and human waste.

7.3 Commercial Services

Parks must make a documented determination of the types and amount of commercial services necessary to realize wilderness purposes (recreational, scenic, scientific, educational, conservation and historical) in a given area at a given time. This documented determination process should be undertaken using an interdisciplinary approach that includes the wilderness manager, commercial services staff, and other resource specialists. There are two specific legal requirements for allowing commercial services from the Wilderness Act (16 U.S.C. 1133(d)(5)). The first requirement of the Wilderness Act is a determination that a certain activity is necessary in wilderness. For activities that are necessary to realize the wilderness purposes, the second requirement is an evaluation of the minimum amount of commercial service that is necessary to achieve these purposes.

Wilderness areas at, or near, visitor use capacity may not be able to accommodate any commercial services either at all or during peak capacity periods. Commercial services, similar to all other activities, may only be allowed in wilderness if wilderness character is preserved. Commercial services may be limited to preserve opportunities for primitive recreation or other aspects of wilderness character. Specific consideration should also be given to the potential short-term and long-term impacts of commercial service activities. The use of motor vehicles, motorized equipment, or mechanized transport is not allowed in wilderness for commercial services.

Commercial filming is considered a commercial service for purposes of the Wilderness Act. Parks must apply the same two legal requirements for commercial services to any commercial filming request in wilderness. For example, is it necessary, why does the commercial filming need to take place in park wilderness? If necessary, what wilderness purposes (recreational, scenic, scientific, educational, conservation and historical) will be realized from this use? In most cases, park managers should work with the applicant to find locations outside of wilderness that can accommodate this use. If wilderness locations are justified, then the activities should minimize impacts to other visitors' enjoyment of wilderness and only use the minimum amount of the wilderness needed for the activity for the shortest possible period of time.

Commercial still photography activities that include the use of models, sets, or props, or promote a product or service are prohibited in wilderness.

Commercial air tours are inconsistent with preservation of wilderness character. Existing air tours over a proposed wilderness area will not preclude consideration for wilderness designation. Ways to prevent or minimize negative impacts to wilderness character should be addressed in Wilderness Stewardship and Air Tour Management Plans. Parks should also work with air tour operators and the FAA to further prevent or minimize negative impacts to wilderness character.

8. Further Guidance

Additional resources available for guidance are:

- Wilderness Act (16 U.S.C. 1131-1136)
- Title 43, Part 19 of the Code of Federal Regulations
- NPS *Management Policies 2006*, Chapter 6
- Reference Manual 41: Wilderness Stewardship
- Director's Order #18: Wildland Fire Management
- Director's Order #53: Special Park Uses
- NPS Wilderness Stewardship Division (internal NPS web site)
- http://wilderness.nps.gov/
- http://www.wilderness.net/

----*End of Director's Order*----

THE WILDERNESS ACT

Public Law 88-577 (16 U.S.C. 1131-1136)
88th Congress, Second Session
September 3, 1964
(As amended)

AN ACT
To establish a National Wilderness Preservation System for the permanent good of the whole people, and for other purposes.
Be it enacted by the Senate and House of Representatives of the United States of America in Congress assembled,

SHORT TITLE

SECTION 1. This Act may be cited as the "Wilderness Act".

WILDERNESS SYSTEM ESTABLISHED STATEMENT OF POLICY

SECTION 2. (a) In order to assure that an increasing population, accompanied by expanding settlement and growing mechanization, does not occupy and modify all areas within the United States and its possessions, leaving no lands designated for preservation and protection in their natural condition, it is hereby declared to be the policy of the Congress to secure for the American people of present and future generations the benefits of an enduring resource of wilderness. For this purpose there is hereby established a National Wilderness Preservation System to be composed of federally owned areas designated by Congress as "wilderness areas", and these shall be administered for the use and enjoyment of the American people in such manner as will leave them unimpaired for future use and enjoyment as wilderness, and so as to provide for the protection of these areas, the preservation of their wilderness character, and for the gathering and dissemination of information regarding their use and enjoyment as wilderness; and no Federal lands shall be designated as "wilderness areas" except as provided for in this Act or by a subsequent Act.

(b) The inclusion of an area in the National Wilderness Preservation System notwithstanding, the area shall continue to be managed by the Department and agency having jurisdiction thereover immediately before its inclusion in the National Wilderness Preservation System unless otherwise provided by Act of Congress. No appropriation shall be available for the payment of expenses or salaries for the administration of the National Wilderness Preservation System as a separate unit nor shall any appropriations be available for additional personnel stated as being required solely for the purpose of managing or administering areas solely because they are included within the National Wilderness Preservation System.

DEFINITION OF WILDERNESS

(c) A wilderness, in contrast with those areas where man and his works dominate the landscape, is hereby recognized as an area where the earth and its community of life are untrammeled by man, where man himself is a visitor who does not remain. An area of wilderness is further defined to mean in this Act an area of undeveloped Federal land retaining its primeval character and influence, without permanent improvements or human habitation, which is protected and managed so as to preserve its natural conditions and which (1) generally appears to have been affected primarily by the forces of nature, with the imprint of man's work substantially unnoticeable; (2) has outstanding opportunities for solitude or a primitive and unconfined type of recreation; (3) has at least five thousand acres of land or is of sufficient size as to make practicable its preservation and use in an unimpaired condition; and (4) may also contain ecological, geological, or other features of scientific, educational, scenic, or historical value.

NATIONAL WILDERNESS PRESERVATION SYSTEM-
EXTENT OF SYSTEM

SECTION 3. (a) All areas within the national forests classified at least 30 days before the effective date of this Act by the Secretary of Agriculture or the Chief of the Forest Service as "wilderness", "wild", or "canoe" are hereby designated as wilderness areas. The Secretary of Agriculture shall–

(1) Within one year after the effective date of this Act, file a map and legal description of each wilderness area with the Interior and Insular Affairs Committees of the United States Senate and the House of Representatives, and such descriptions shall have the same force and effect as if included in this Act: *Provided, however,* That correction of clerical and typographical errors in such legal descriptions and maps may be made.

(2) Maintain, available to the public, records pertaining to said wilderness areas, including maps and legal descriptions, copies of regulations governing them, copies of public notices of, and reports submitted to Congress regarding pending additions, eliminations, or modifications. Maps, legal descriptions, and regulations pertaining to wilderness areas within their respective jurisdictions also shall be available to the public in the offices of regional foresters, national forest supervisors, and forest rangers.

(b) ***(Classification)*** The Secretary of Agriculture shall, within ten years after the enactment of this Act, review, as to its suitability or nonsuitability for preservation as wilderness, each area in the national forests classified on the effective date of this Act by the Secretary of Agriculture or the Chief of the Forest Service as "primitive" and report his findings to the President. ***(Presidential recommendation to Congress)*** The President shall advise the United States Senate and House of Representatives of his recommendations with respect to the designation as "wilderness" or other reclassification of each area on which review has been completed, together with maps and a definition of boundaries. Such advice shall be given with respect to not less than one-third of all the areas now classified as "primitive" within three years after the enactment of this Act, and the remaining areas within ten years after the enactment of this Act. ***(Congressional***

approval) Each recommendation of the President for designation as "wilderness" shall become effective only if so provided by an Act of Congress. Areas classified as "primitive" on the effective date of this Act shall continue to be administered under the rules and regulations affecting such areas on the effective date of this Act until Congress has determined otherwise. Any such area may be increased in size by the President at the time he submits his recommendations to the Congress by not more than five thousand acres with no more than one thousand two hundred and eighty acres of such increase in any one compact unit; if it is proposed to increase the size of any such area by more than five thousand acres or by more than one thousand two hundred and eighty acres in any one compact unit the increase in size shall not become effective until acted upon by Congress. Nothing herein contained shall limit the President in proposing, as part of his recommendations to Congress, the alteration of existing boundaries of primitive areas or recommending the addition of any contiguous area of national forest lands predominantly of wilderness value. Notwithstanding any other provisions of this Act, the Secretary of Agriculture may complete his review and delete such areas as may be necessary, but not to exceed seven thousand acres, from the southern tip of the Gore Range-Eagles Nest Primitive Area, Colorado, if the Secretary determines that such action is in the public interest.

(c) ***(Report to President)*** Within ten years after the effective date of this Act the Secretary of the Interior shall review every roadless area of five thousand contiguous acres or more in the national parks, monuments, and other units of the national park system and every such area of, and every roadless island within, the national wildlife refuges and game ranges, under his jurisdiction on the effective date of this Act and shall report to the President his recommendation as to the suitability or nonsuitability of each such area or island for preservation as wilderness. ***(Presidential recommendation to Congress)*** The President shall advise the President of the Senate and the Speaker of the House of Representatives of his recommendation with respect to the designation as wilderness of each such area or island on which review has been completed, together with a map thereof and a definition of its boundaries. Such advice shall be given with respect to not less than one-third of the areas and islands to be reviewed under this subsection within three years after enactment of this Act, not less than two-thirds within seven years of enactment of this Act, and the remainder within ten years of enactment of this Act. ***(Congressional approval)*** A recommendation of the President for designation as wilderness shall become effective only if so provided by an Act of Congress. Nothing contained herein shall, by implication or otherwise, be construed to lessen the present statutory authority of the Secretary of the Interior with respect to the maintenance of roadless areas within units of the national park system.

(d)(1) ***(Suitability)*** The Secretary of Agriculture and the Secretary of the Interior shall, prior to submitting any recommendations to the President with respect to the suitability of any area for preservation as wilderness—

(A) ***(Publication in Federal Register)*** give such public notice of the proposed action as they deem appropriate, including publication in the Federal Register and in a newspaper having general circulation in the area or areas in the vicinity of the affected land;

(B) ***(Hearings)*** hold a public hearing or hearings at a location or locations convenient to the area affected. The hearings shall be announced through such means as the respective Secretaries involved deem appropriate, including notices in the Federal Register and in newspapers of general circulation in the area: *Provided*, That if the lands involved are located in more than one State, at least one hearing shall be held in each State in which a portion of the land lies;

(C) at least thirty days before the date of a hearing advise the Governor of each State and the governing board of each county, or in Alaska the borough, in which the lands are located, and Federal departments and agencies concerned, and invite such officials and Federal agencies to submit their views on the proposed action at the hearing or by no later than thirty days following the date of the hearing.

(2) Any views submitted to the appropriate Secretary under the provisions of (1) of this subsection with respect to any area shall be included with any recommendations to the President and to Congress with respect to such area

(e) ***(Proposed modification)*** Any modification or adjustment of boundaries of any wilderness area shall be recommended by the appropriate Secretary after public notice of such proposal and public hearing or hearings as provided in subsection (d) of this section. The proposed modification or adjustment shall then be recommended with map and description thereof to the President. The President shall advise the United States Senate and the House of Representatives of his recommendations with respect to such modification or adjustment and such recommendations shall become effective only in the same manner as provided for in subsections (b) and (c) of this section.

USE OF WILDERNESS AREAS

SECTION 4. (a) The purposes of this Act are hereby declared to be within and supplemental to the purposes for which national forests and units of the national park and wildlife refuge systems are established and administered and--

(1) Nothing in this Act shall be deemed to be in interference with the purpose for which national forests are established as set forth in the Act of June 4, 1897 (30 Stat.11), and the Multiple-Use Sustained-Yield Act of June 12, 1960 (74 Stat. 215).

(2) Nothing in this Act shall modify the restrictions and provisions of the Shipstead-Nolan Act (Public Law 539, Seventy-first Congress, July 10, 1930; 46 Stat. 1020), the Thye-Blatnik Act (Public Law 733, Eightieth Congress, June 2, 1948; 62 Stat. 568), and the Humphrey-Thye-Blatnik-Andersen Act (Public Law 607, Eighty-fourth Congress, June 22, 1956; 70 Stat. 326), as applying to the Superior National Forest or the regulations of the Secretary of Agriculture.

(3) Nothing in this Act shall modify the statutory authority under which units of the national park system are created. Further, the designation of any area of any park, monument, or other unit of the national park system as a wilderness area pursuant to this Act shall in no manner lower the standards evolved for the use and preservation of such park, monument, or other unit of the national park

system in accordance with section 100101(b)(1), chapter 1003, and sections 100751(a), 100752, 100753, and 102101 of title 54, United States Code, the statutory authority under which the area was created, or any other Act of Congress which might pertain to or affect such area, including, but not limited to, section 3(2) of the Federal Power Act (16 U.S.C. 796(2)); and chapters 3201 and 3203 of title 54, United States Code.

(b) Except as otherwise provided in this Act, each agency administering any area designated as wilderness shall be responsible for preserving the wilderness character of the area and shall so administer such area for such other purposes for which it may have been established as also to preserve its wilderness character. Except as otherwise provided in this Act, wilderness areas shall be devoted to the public purposes of recreational, scenic, scientific, educational, conservation, and historical use.

PROHIBITION OF CERTAIN USES

(c) Except as specifically provided for in this Act, and subject to existing private rights, there shall be no commercial enterprise and no permanent road within any wilderness area designated by this Act and except as necessary to meet minimum requirements for the administration of the area for the purpose of this Act (including measures required in emergencies involving the health and safety of persons within the area), there shall be no temporary road, no use of motor vehicles, motorized equipment or motorboats, no landing of aircraft, no other form of mechanical transport, and no structure or installation within any such area.

SPECIAL PROVISIONS

(d) The following special provisions are hereby made:

(1) Within wilderness areas designated by this Act the use of aircraft or motorboats, where these uses have already become established, may be permitted to continue subject to such restrictions as the Secretary of Agriculture deems desirable. In addition, such measure may be taken as may be necessary in the control of fire, insects, and diseases, subject to such conditions as the Secretary deems desirable.

(2) Nothing in this Act shall prevent within national forest wilderness areas any activity, including prospecting, for the purpose of gathering information about mineral or other resources, if such activity is carried on in a manner compatible with the preservation of the wilderness environment. Furthermore, in accordance with such program as the Secretary of the Interior shall develop and conduct in consultation with the Secretary of Agriculture, such areas shall be surveyed on a planned, recurring basis consistent with the concept of wilderness preservation by the Geological Survey and the Bureau of Mines to determine the mineral values, if any, that may be present; and the results of such surveys shall be made available to the public and submitted to the President and Congress.

(3) ***(Mineral leases, claims, etc)*** Notwithstanding any other provisions of this Act, until midnight December 31, 1983, the United States mining laws and all

laws pertaining to mineral leasing shall, to the same extent as applicable prior to the effective date of this Act, extend to those national forest lands designated by this Act as "wilderness areas"; subject, however, to such reasonable regulations governing ingress and egress as may be prescribed by the Secretary of Agriculture consistent with the use of the land for mineral location and development and exploration, drilling, and production, and use of land for transmission lines, waterlines, telephone lines, or facilities necessary in exploring, drilling, production, mining, and processing operations, including where essential the use of mechanized ground or air equipment and restoration as near as practicable of the surface of the land disturbed in performing prospecting, location, and, in oil and gas leasing, discovery work, exploration, drilling, and production, as soon as they have served their purpose. Mining locations lying within the boundaries of said wilderness areas shall be held and used solely for mining or processing operations and uses reasonably incident thereto; and hereafter, subject to valid existing rights, all patents issued under the mining laws of the United States affecting national forest lands designated by this Act as wilderness areas shall convey title to the mineral deposits within the claim, together with the right to cut and use so much of the mature timber therefrom as may be needed in the extraction, removal, and beneficiation of the mineral deposits, if needed timber is not otherwise reasonably available, and if the timber is cut under sound principles of forest management as defined by the national forest rules and regulations, but each such patent shall reserve to the United States all title in or to the surface of the lands and products thereof, and no use of the surface of the claim or the resources therefrom not reasonably required for carrying on mining or prospecting shall be allowed except as otherwise expressly provided in this Act: *Provided*, That, unless hereafter specifically authorized, no patent within wilderness areas designated by this Act shall issue after December 31, 1983, except for the valid claims existing on or before December 31, 1983. Mining claims located after the effective date of this Act within the boundaries of wilderness areas designated by this Act shall create no rights in excess of those rights which may be patented under the provisions of this subsection. Mineral leases, permits, and licenses covering lands within national forest wilderness areas designated by this Act shall contain such reasonable stipulations as may be prescribed by the Secretary of Agriculture for the protection of the wilderness character of the land consistent with the use of the land for the purposes for which they are leased, permitted, or licensed. Subject to valid rights then existing, effective January 1, 1984, the minerals in lands designated by this Act as wilderness areas are withdrawn from all forms of appropriation under the mining laws and from disposition under all laws pertaining to mineral leasing and all amendments thereto.

(4) ***(Water resources and grazing)*** Within wilderness areas in the national forests designated by this Act, (1) the President may, within a specific area and in accordance with such regulations as he may deem desirable, authorize prospecting for water resources, the establishment and maintenance of reservoirs, water-conservation works, power projects, transmission lines, and other facilities needed in the public interest, including the road construction and maintenance essential to development and use thereof, upon his determination that such use or uses in the specific area will better serve the interests of the United States and the people

thereof than will its denial; and (2) the grazing of livestock, where established prior to the effective date of this Act, shall be permitted to continue subject to such reasonable regulations as are deemed necessary by the Secretary of Agriculture.

(5) Commercial services may be performed within the wilderness areas designated by this Act to the extent necessary for activities which are proper for realizing the recreational or other wilderness purposes of the areas.

(6) Nothing in this Act shall constitute an express or implied claim or denial on the part of the Federal Government as to exemption from State water laws.

(7) Nothing in this Act shall be construed as affecting the jurisdiction or responsibilities of the several States with respect to wildlife and fish in the national forests.

STATE AND PRIVATE LANDS WITHIN WILDERNESS AREAS

SECTION 5. (a) In any case where State-owned or privately owned land is completely surrounded by national forest lands within areas designated by this Act as wilderness, such State or private owner shall be given such rights as may be necessary to assure adequate access to such State-owned or privately owned land by such State or private owner and their successors in interest, or the State-owned land or privately owned land shall be exchanged for federally owned land in the same State of approximately equal value under authorities available to the Secretary of Agriculture: ***(Transfers, restriction)*** *Provided, however,* That the United States shall not transfer to a State or private owner any mineral interests unless the State or private owner relinquishes or causes to be relinquished to the United States the mineral interest in the surrounded land.

(b) In any case where valid mining claims or other valid occupancies are wholly within a designated national forest wilderness area, the Secretary of Agriculture shall, by reasonable regulations consistent with the preservation of the area as wilderness, permit ingress and egress to such surrounded areas by means which have been or are being customarily enjoyed with respect to other such areas similarly situated.

(c) ***(Acquisition)*** Subject to the appropriation of funds by Congress, the Secretary of Agriculture is authorized to acquire privately owned land within the perimeter of any area designated by this Act as wilderness if (1) the owner concurs in such acquisition or (2) the acquisition is specifically authorized by Congress.

GIFTS, BEQUESTS, AND CONTRIBUTIONS

SECTION 6. (a) The Secretary of Agriculture may accept gifts or bequests of land within wilderness areas designated by this Act for preservation as wilderness. The Secretary of Agriculture may also accept gifts or bequests of land adjacent to wilderness areas designated by this Act for preservation as wilderness if he has given sixty days advance notice thereof to the President of the Senate and the

Speaker of the House of Representatives. Land accepted by the Secretary of Agriculture under this section shall become part of the wilderness area involved. Regulations with regard to any such land may be in accordance with such agreements, consistent with the policy of this Act, as are made at the time of such gift, or such conditions, consistent with such policy, as may be included in, and accepted with, such bequest.

(b) The Secretary of Agriculture or the Secretary of the Interior is authorized to accept private contributions and gifts to be used to further the purposes of this Act.

ANNUAL REPORTS

SECTION 7. At the opening of each session of Congress, the Secretaries of Agriculture and Interior shall jointly report to the President for transmission to Congress on the status of the wilderness system including a list and descriptions of the areas in the system, regulations in effect, and other pertinent information, together with any recommendations they may care to make.

(Termination of Reporting Requirements)
For termination, effective May 15, 2000, of provisions of this section relating to transmission to Congress of annual report on status of wilderness system, see section 3003 of Pub. L. 104-66, as amended, set out as a note under section 1113 of Title 31, Money and Finance, and pages 48, 110, and 149 of House Document No. 103-7.

Approved September 3, 1964.

Legislative History:
House Reports: No. 1538 accompanying H.R. 9070 (Committee on Interior & Insular Affairs) and No. 1829 (Committee of Conference).
Senate Report: No. 109 (Committee on Interior & Insular Affairs).
Congressional Record: Vol. 109 (1963): April 4, 8, considered in Senate. April 9, considered and passed Senate. Vol. 110 (1964): July 28, considered in House. July 30, considered and passed House, amended, in lieu of H.R. 9070. August 20, House and Senate agreed to conference report.

Note: italicized words in parentheses are editorial additions inserted for reader's convenience.

Amendments to the Wilderness Act of 1964

Public Law 95-495, October 21, 1978
Section 4(b): Paragraph (5) of section 4(d) of the Wilderness Act of 1964 is hereby repealed and paragraphs (6), (7), and (8) of such section 4(d) are hereby redesignated as paragraphs (5), (6), and (7).

> *Original text of the Wilderness Act of 1964 which was repealed:*
> *4(d)(5) Other provisions of this Act to the contrary notwithstanding, the management of the Boundary Waters Canoe Area, formerly designated as the Superior, Little Indian Sioux, and Caribou Roadless Areas, in the Superior National Forest, Minnesota, shall be in accordance with regulations established by the Secretary of Agriculture in accordance with the general purpose of maintaining, without unnecessary restrictions on other uses, including that of timber, the primitive character of the area, particularly in the vicinity of lakes, streams, and portages: Provided, That nothing in this Act shall preclude the continuance within the area of any already established use of motorboats.*

Public Law 113-287, December 19, 2014
Section 5(d)(21): Section 4(a)(3) of the Wilderness Act (16 U.S.C. 1133(a)(3)) is amended—
(A) by striking ‘‘the Act of August 25, 1916’’ and substituting ‘‘section 100101(b)(1), chapter 1003, and sections 100751(a), 100752, 100753, and 102101 of title 54, United States Code’’; and
(B) by striking ‘‘the Act of June 8, 1906 (34 Stat. 225; 16 U.S.C. 432 et seq); section 3(2) of the Federal Power Act (16 U.S.C. 796(2)); and the Act of August 21, 1935 (49 Stat. 666; 16 U.S.C. 461 et seq.)’’ and substituting ‘‘section 3(2) of the Federal Power Act (16 U.S.C. 796(2)); and chapters 3201 and 3203 of title 54, United States Code’’.

> *Original text of the Wilderness Act of 1964 which was amended:*
> *4(a)(3) Nothing in this Act shall modify the statutory authority under which units of the national park system are created. Further, the designation of any area of any park, monument, or other unit of the national park system as a wilderness area pursuant to this Act shall in no manner lower the standards evolved for the use and preservation of such park, monument, or other unit of the national park system in accordance with the Act of August 25, 1916, the statutory authority under which the area was created, or any other Act of Congress which might pertain to or affect such area, including, but not limited to, the Act of June 8, 1906 (34 Stat. 225; 16 U.S.C. 432 et seq.); section 3(2) of the Federal Power Act (16 U.S.C. 796 (2)); and the Act of August 21,1935 (49 Stat. 666; 16 U.S.C. 461 et seq.).*

Regional Forester

W. W. Dresskell, F.S.

U-USES, Silver Lake Irrigation Co., Reservoir, 11/27/46
(Proposed Reconstruction)

PLAN AFFECTING WILDERNESS AREA POLICY

Wilderness Area Policies Affected

The Proclamation dated May 28, 1937, setting aside the Bridger Wilderness Area recognizes:

1. The proposal to conserve, so far as controlling economic conditions will permit, the opportunity for the public to observe the conditions which existed in the pioneer phases of the Nation's development.

2. It is not intended that creation of this primitive area will operate to withdraw water resources from industrial use, since utilization of the resource, if properly regulated, will not be incompatible with the purpose for which the area is intended.

3. The area will be closed to occupancy under special use permit and to public roads.

4. One very poor wagon road enters the area via Pocket Creek. It is not contemplated to improve it.

5. The area contains many potential reservoir sites. A few of them are partially developed. It is recognized that the existence of ranches and communities, such as in Eden Valley, are dependent upon irrigation water. It is proposed to keep out reservoir development in so far as practicable and reasonable, and limit what is done to areas which will not seriously interfere with higher scenic and recreational values.

6. Since the artificial lowering or raising of the lake levels tends to injure the beauty of the shore lines, and in a measure, defeat

the major purpose for which the primitive area is created, demands for future development will be considered only upon a showing of need, and a showing that the approval of a permit will be in the best interests of the public welfare. Each project will be considered upon its merits, and no permit will be issued for reservoir development until the plans and specifications covering the lowering and raising of the lakes, and dam construction, have been approved by the Regional Forester.

7. If, in the course of time, new conditions shall develop under which the controlled utilization of more of the natural resources of the area become economically practicable and socially desirable, the Forester will feel free to modify the plan of management and use, so that while public enjoyment of the unique scenic and recreational values may continue, a proper, correlated utilization of the other resources shall not necessarily be precluded or unduly restricted.

The policy established regarding all Wilderness Areas includes:

(a) Roads passable to motor cars are entirely barred.

(b) The Forest Service has authority to prohibit the use of motorized transportation including 4-wheel drive vehicles, weasels or motorcycles in wilderness areas classified under the old Reg. L-20.

(c) Grazing of domestic livestock, development of water storage projects which do not involve road construction, and improvements necessary for fire protection may be permitted subject to such restrictions as the Chief deems desirable.

REVIEW OF PAST CONDITIONS

A special use permit was issued 1/1/28 to the Silver Lake Reservoir Company, now re-named the Silver Lake Irrigation District, for a reservoir

with 1219.11 acre feet storage capacity on Silver Lake. The Silver Lake dam was about 163 feet long. Log walls about 10 feet apart were laid up and cross tied at about every 10-foot interval and the cribs were partially filled with rock. The height of cribs was about 6½ feet above the lake level and the upper sides were faced with galvanized tin. Water cut under the center section in 1934 and the dam was repaired in 1935. Provisions were made to raise the lake level 6½ feet. The repairs were never satisfactory and since 1935 the Company experienced difficulty in retaining the impounded water.

The permit was re-issued 3/11/40 for the purpose of maintaining a dam and dam structures that have been completed; and to maintain the level of the lake during storage periods at a level not in excess of that to which it has been maintained since 1928; with the further provision that no additional construction work will be performed to facilitate further lowering or raising of the level of the lake until a new permit has been obtained.

On 11/27/46 the Company requested permission to reconstruct the present dam and raise it to a height of 18 feet to increase the storage capacity to 2500 acre feet. Action is pending upon this request.

A road via Pocket Creek was constructed into the Silver Lake reservoir site to haul in materials when the dam was constructed in 1928. The road is in very poor condition and use has been practically limited to hauling salt by cattle permittees. Local ranchers state that the Forest Service aided with the original construction of the road. The approved Bridger Road Plan includes the Pocket Creek road #48 from a point on Pocket Creek two miles below the Forest Boundary to Pocket Creek summit, a point two and eight-tenths miles within the Forest

Boundary (See attached map). Although on the system, the road has not been maintained and the entrance, off the forest, at the Jensen ranch has been kept padlocked.

CONDITIONS TO BE CONSIDERED AFFECTED WILDERNESS AREA POLICY IF CONSTRUCTION IS PERMITTED:

1. A way suitable for hauling construction and camp material and equipment from off the forest to the camp and dam is essential. A means of hauling material from borrow pits to the damsite must be provided.

2. The level of the lake will be raised, but not lowered below present low level.

3. Motorized transportation will be allowed during dam construction only.

4. A campsite within the Wilderness Area will be essential.

5. Temporary scars will be created in borrow pits, damsite and spillway excavation and from vehicular traffic caused from hauling of materials.

PLAN TO PROTECT THE WILDERNESS AREA POLICY

1. The terrain between the Wilderness Area boundary and Silver Lake is open, gently rolling grass and sagebrush lands. Soils by August 1 are firm and dry and will carry the heaviest of construction vehicles. A minimum of road construction will be allowed within the Wilderness Area before safe travel can be accomplished with ordinary vehicles. (See 1st and 4th pictures of Nicholls report attached for typical terrain to be traversed in reaching the damsite.

Because travel is not confined, the permittee will be required to survey one route and confine all traffic to one set of wheel tracks. The

same applies to hauls from borrow pits. The only construction permitted will be the blasting of boulders and corduroying of moist spots.

No restrictions need be placed on the maximum size of equipment to be used on construction. Road conditions on dugways below the Wilderness Area boundary will be the governing factor.

2. The lake shore is nearly devoid of vegetation. Several grass meadows at the upper end of the lake will be flooded and sagebrush and scattered willows will be flooded along the shores. The shore is sandy and the flooding will extend the shore line. Most shore line is gentle, so little erosion caused by wave action is anticipated. No damaging effects to recreational values can be foreseen due to the raising of the water level. (See 2nd and 3rd pictures in Nicholls' report attached.)

3. Any road constructed to a point within 1/2 mile of the Wilderness Area boundary allows motorcar access into the Wilderness Area. After completion of the dam reconstruction, the road will be blasted at a dugway about two miles below the Wilderness Area boundary to effectively barricade all vehicular travel above that point. This action will effectively eliminate possible motorized travel into the Wilderness Area over the Pocket Creek road which existed at the creation of the area. During construction, it will be required that all private cars be parked at the Wilderness area boundary.

In addition to construction machinery, transportation vehicles will be allowed to transport workers from camp to the dam and to transport men and supplies to camp from points off the forest. No use of vehicles will be permitted for other than construction or related activities.

4. The campsite will be of strictly temporary nature - trailers and personally owned automobiles will not be allowed access. The Forest Officer in charge will approve location, layout and construction plans, including sanitation. The campsite will be cleaned to its original condition upon the termination of its use. The location has been designated at the old cow camp cabin in the southwest quarter of Section 5, Township 33 North, Range 105 West. No camping will be permitted at Silver Lake. Use of the camp for housing guests of construction workers or other recreationists visiting the area, will be prohibited.

5. Material for the dam fill will be taken for the two designated pits. One is located at the damsite and the second at Whiskey Creek. The top soil from the damsite pit will be scraped and stockpiled before borrowing is commenced. After completion of the dam, the pit will be smoothed to conform with the general contour of the adjacent area, top soil replaced, then revegetated with a grass seeding. After seeding a method of seed coverage, such as harrowing, will be accomplished to insure seedling growth. The Whiskey Creek pit will be prepared and disposed of in a similar manner, excepting that the creek may be channeled into the pit, forming a lake, then only that portion above water line needs to be treated and revegetated.

After work is completed, all scars, roads, borrow pits, spillways and other scars resulting from dam construction, travel and camp use, will be reseeded with the aforementioned mixture. Broadcasting without coverage will be accepted as satisfactory on road and dam backslopes and fills. Road treads and other scars on flat ground will be loosened, seeded and the seed covered.

6. No local or national opposition is anticipated. Local outfitters are aware of the proposal and have made no comment. Recreationists from Rock Springs are familiar with the situation and accept it as being reasonable.

Local Sportsmen groups, outfitters and State Fish and Game officials are in support of the broad Wilderness policy. They have had the plan for reconstruction of this dam explained to them and have indicated that they do not object to the proposed work.

Neither the local Soil Conservation Service nor Reclamation Service officials have any plans regarding additional reservoirs within the Wilderness Area. Forest personnel on the Bridger do not know of other proposals. Other reservoirs presently permitted within the Wilderness Area are located on Wolf Lake, Divide Lake, Clear Lake, Black Joe Lake, Big Sandy and V Lake. These reservoirs have permanent type improvements and no foreseeable work on them will be required.

7. The proposed increase of storage capacity to 2,500 acre feet will be used entirely to assure adequate irriagion water for the 2,400 acres previously adjudicated and developed in connection with the special use permit originally issued 1/1/28.

No other adequate storage chance is available and the proposed increase of storage will assure the farmers of ~~Eden Valley~~ Silver Creek one irrigation annually which is necessary in order for them to harvest a successful crop. The need for the additional irrigation water has been proven by repeated partial crop failures on the developed area since 1935.

S/ W W. Dreskell

SPECIFICATIONS FOR CONSTRUCTION OF SILVER LAKE DAM, BOULDER, WYOMING.

I. General Condition

1. Location and General Description:

The Silver Lake Irrigation District, Boulder, Wyoming, requires the construction of an earth dam containing a corrugated metal outlet pipe encased in concrete with an inclined metal slide gate and the excavation of a spillway in accordance with these specifications and with the attached plans that are a part of these specifications. The dam is located on Silver Creek in unsurveyed territory about seventeen miles east of the town of Boulder, Wyoming. It is in the Bridger National Forest and within the Bridger Wilderness Area on land owned by the Federal Government and administered by the United States Forest Service. Station 1 + 21.5 on the ~~contour~~ center line of the dam is located North 10° 07' West 5036 feet from the northwest corner of the northeast quarter of Section 3, Township 32 North, Range 105 West. The dam is to be constructed in approximately the same location as an existing old rock filled timber dam, which is to be removed and material disposed of in a manner satisfactory to the Forest Supervisor or his representative. The project site is located at an altitude of approximately 9,930 feet. Construction of the dam will begin about August 1, 1951, and will be completed by October 15, 1951. Work in winter in this high altitude is impossible due to snow and freezing temperatures. Spring floods and the need of the water for irrigation make it inadvisable to start work until the above mentioned date. The regulations of the Forest Service must be complied with for the work proposed is within the Bridger Wilderness Area of the Bridger National Forest. The Forest Service recognizes easements, rights-of-way and

special use permits that have been established by the Silver Lake Irrigation District that own the reservoirs and have been granted permits to cover construction enumerated in the specifications. The contractor will be subject to the following special conditions required by the U. S. Forest Service.

a. Disposal of Existing Dam. Logs and inflammable material will be piled and burned at a place or places on or adjacent to the dam site designated by the forest officer in charge. Rock and fill material not used in the construction of the new dam will be dumped in the reservoir area, or scattered to conform with the natural surroundings at the dam site. Headgate and other metal material remaining from the old dam and not used will be hauled from the forest for disposal.

b. Roads. A minimum of road construction will be allowed within the Wilderness Area. This shall consist of blasting boulders to allow clearance for construction vehicles and placing corduroy in soft spots. All work on roads requires the approval of the forest officer in charge. The terrain is level or gently rolling and ground conditions are firm so that travel by wheeled vehicles is possible over most of the area. Vehicles will be confined to one set of wheel tracks between points of travel. Specifically, from the Wilderness Area boundary to camp, from the borrow pit to the dam site, and from camp to the dam site. Required road construction to allow transportation of equipment and supplies, will be permitted from the Forest Boundary to the Wilderness Area Boundary.

c. Camp. The location for the construction camp has been designated at the old cow camp cabin in the southwest quarter of Section 5, Township 33 North, Range 105 West. This camp will be of temporary nature, consisting of

tent frames and tents and will be laid out according to plans of the Forest Officer in charge. No trailer houses or temporary buildings of lumber construction will be permitted. The cutting or defacing of green timber or the marring of the general landscape feature is prohibited. The campsite will be cleaned to its original condition at the termination of use. No camping by construction personnel will be permitted at Silver Lake.

d. Borrow Pit. Material for the dam fill will be taken from the two designated pits. One is located at the dam site and the second at Whiskey Creek. The top soil from the dam site pit will be scraped and stockpiled before borrowing is commenced. After completion of the dam, the pit will be smoothed to conform with the general contour of the adjacent area, top soil replaced, then revegetated. The misture of grass seed and the method of seeding shall be approved by the Forest Officer in charge. The Whiskey Creek pit shall be prepared and disposed of in a similar manner, excepting that the creek may be channeled into the pit, forming a lake and only that portion above water line needs to be treated and revegetated.

e. Treatment of Roads, Road Treads, Ditches, Spillway Cuts and Other Land Scars. After work is completed, all scars, road treads and otherwise, resulting from dam construction, travel and camp use, will be reseeded as specified above. All corduroy placed in roads constructed for this project shall be removed or treated in a manner satisfactory to the Forest Officer in charge.

f. Wilderness Area Provisions. Because the camp, dam and a portion of the road are within the Bridger Wilderness Area, the following provisions shall be strictly enforced.

Only construction vehicles will be allowed within the Wilderness Area. No private vehicles not used for construction will be allowed to enter the

Wilderness Area. This includes cars owned by workmen on the project. If private vehicles are taken into the forest, these shall be parked at the Wilderness Area Boundary. The contractor will make provision for the required road blocks to accomplish this objective. Construction or transportation vehicles shall not be used to transport personnel from camp to Silver Lake or other parts of the wilderness area for the purpose of hunting or fishing, or for any reason other than the construction of the Silver Lake dam project. The padlock on the gate at the Gladwen Jensen ranch below the forest boundary will be kept locked to prevent the general public from using the road constructed for traffic essential to the project. The camp will not be used to provide facilities for recreationists visiting the area.

Definition of terms. Under the terms of the contract the party of the first part is the Silver Lake Irrigation District and the party of the Second Part is the person, firm, or corporation to whom award is made.

For purposes of clarification, it should be understood that the Silver Lake Irrigation District has entered into an agreement with the Soil Conservation Service of the United States Department of Agriculture, said agreement being no part of these specifications, for engineering and other technical assistance in the design and construction proposed herein. The Silver Lake Irrigation District is also subject to the regulations of the Forest Service, United States Department of Agriculture, and has obtained a permit for the construction proposed herein. The Silver Lake Irrigation District has appointed the Soil Conservation Service its sole designated agent with full authority to interpret specifications, to supervise construction, and to prosecute the work in accordance with these specifications, subject to Forest

Service approval. The party of the second part in signing the contract recognizes and accepts these relationships.

The word "Representative" will refer to the official whom the Soil Conservation Service designates as its field representative, and that official will be the designated agent of the Silver Lake Irrigation District, in accordance with the explanation given above. The Forest Officer in charge will refer to the District Forest Ranger located at Pinedale, Wyoming.

The word "Owner" will mean the Silver Lake Irrigation District, Sublette County, Wyoming, for whom the work is to be performed. The owner will be responsible for payment in accordance with the terms of the contract.

The word "Contractor" as hereinafter used will designate the party of the second part. Subcontractors as such will not be recognized.

Contractor to be present or represented. The contractor at all times shall be present upon the work or shall have a responsible agent or foreman who will, in writing, have full authority to act for the contractor and to carry out instructions given him by the Representative. The foreman shall be qualified to handle all phases of the work covered herein and shall be able to read plans and to interpret specifications. At no cost to the contractor a reasonable number of copies of the Plans and Specifications will be supplied him for use during construction operations. It will be the responsibility of the contractor to see that all his personnel give their fullest cooperation to the Representative even though all dealings of the Representative, except in emergencies, will be with the Contractor or his foreman.

Scope of work covered by specifications. Unless specifically excepted in the specifications, the contractor will furnish all materials, implements, machinery, equipment, tools, supplies, transportation and labor necessary to do

all the work enumerated or provided for under the terms and stipulations of the specifications, the proposal, and the contract.

Plans and working designs. The approved plans will be supplemented by such work drawings as are necessary to adequately control the work. It is mutually agreed that all authorized alterations affecting the requirements and the information given on the approved plans will be in writing and approved by the representative and the Forest Officer in charge. When at any time reference is made to the Plans the interpretation shall be the plans as affected by all authorized alterations then in effect.

Responsibility of damages. The Contractor assumes entire responsibility for the safety of his employees and of his plant, materials, and supplies and for any damage or injuries done by said employees or done to any of them from any source or cause. He shall save harmless the owner and his representative and employees from all suits, actions, or claims resulting from said injuries or damage or from any act or omission of the Contractor, his employees, or his agents in the execution of the work. Said responsibility shall continue until all construction will have been completed and accepted. The owner upon the recommendation of the representative may withhold any money due under the contract in an amount he may consider necessary to cover claims for damages or costs of suits until such are settled or disposed of and satisfactory evidence to that affect furnished him.

Damage to construction. The Contractor shall safeguard, until all work under contract is formally accepted, all construction both complete and incomplete, against damage and destruction, and should damage result he will be required to repair it at his expense in a manner conforming to these specifications. In the absence of definite instructions in the specifications, reconstruction shall be done in a manner suitable to the representative. It is

understood the Contractor would not be expected to pay for damages done to any work undertaken by the owner unless through carelessness of the Contractor such work was damaged.

Patent infringements. The Contractor shall hold and save the owner harmless from all demands, or liabilities for alleged use or manufacture of any patented or unpatented invention, idea, or process on work or on articles herein contracted.

Authority of representative. The representative will decide all questions that arise relative to the interpretation of the specifications and the contract. The Forest Officer in charge will decide all questions relative to the special use permit and regulations of the U. S. Forest Service. They will impartially see that each party to the contract complies with his part of the specifications and regulations.

Representative to be referee. The representative will pass upon the quality and acceptability of the workmanship and of the materials and supplies used under the contract. It will be his duty to enforce the specifications in a fair and unbiased manner, although he has the right to waive any term that may be found unreasonable and out of line with the general spirit of the specifications. If a variation from any requirement is allowed, the representative will grant same in writing with the reasons for his action outlined, but the contract will in no manner be vitiated by such action. The representative will obtain approvals and acceptance of workmanship from the Forest Officer in charge and will not approve any specifications or workmanship not acceptable to the Forest Service.

Sanitary provisions. Satisfactory latrines and garbage pits will be installed at points designated by the Forest Officer in charge and maintained

by the owner at the site of the construction work, and the contractor and his employees will observe and recognize sanitary regulations there. The contractor shall install and maintain latrines in accordance with the regulations of the State Department of Public Health and Forest Service at his plant and the construction camp.

Lines and Grades. Responsibility for setting stakes and for giving lines and grades rests with the representative. The contractor should give him ample notice when surveys will be needed so that stakes can be promptly set without causing costly delays or troublesome inconvenience to anyone. Preservation of survey stakes and marks is the responsibility of the contractors. If such stakes are destroyed before having fulfilled their purpose, the contractor may be charged for the expense of replacement.

Errors, omissions, and inconsistencies. Neither the owner nor the contractor will be allowed to take advantage of an error, omission or inconsistency. Errors, omissions, or inconsistencies discovered by any bidder prior to the opening of the bid will be clarified in accordance with the paragraph "Clarification of Specifications."

Initiation, Prosecution and Completion. The contractor, if weather conditions permit, shall begin construction work on or before August 1, 1951. Each bidder will state in his proposal the number of consecutive calendar days that he would require after the contract is signed to complete the construction, but no proposal will be considered where a period of more than 90 days is required. The owner reserves the right to give preference to a bidder who has offered to complete the work in the shortest time and who, by reputation, has the ability to live up to the time offered in his proposal and has the equipment and resources to accomplish the work within said period. If the

contractor fails to complete the work within the time specified, including any authorized extensions of time, the owner may deduct from any sums due the contractor fifteen dollars ($15.00) for each day beyond the total authorized time. This $15.00 per day charge will be collected as liquidated damages incurred by the owner as a result of the delay and not as a penalty against the contractor for failure to meet the terms of the specifications.

Sufficiency of Time. The period allowed for construction and completion of the proposed work, unless extraordinary and unforeseen difficulties arise, is sufficient if a properly equipped and ably managed firm takes advantage of each good working day. Should extraordinary and unforeseen difficulties arise that in the opinion of the Contractor justify an extension of time, he shall in writing apply to the representative for an extension, and the representative shall in writing grant the extension required, or a portion of it, or reject the request.

Should the representative at any time decide that work is not progressing at the rate specified elsewhere in these specifications, he shall notify the Contractor in writing and give him a specified number of days in which to correct the condition. A copy of the notification to the contractor shall be sent to the owner.

At the expiration of the stipulated period if the contractor has not corrected the condition, a representative of the owner and a representative of the contractor will meet with the representative to form a board to decide what steps should be taken to correct the situation. This board may decide what additional labor and equipment should be hired, or under extreme conditions the full charge of operations should be withdrawn from the Contractor and placed

in the hands of the representative for a definite prescribed period or until the construction is completed. Under such circumstances the representative has the right to take over the Contractor's entire plant and a crew or any portion of either.

Any cost to the owner in excess of the cost computed by contract rates, as a result of the action of the board, shall be deducted from any sums due or to become due the Contractor. Failure of the representative to notify the Contractor promptly, should progress fall behind schedule, shall not be construed to affect the right of the representative to later take action.

Delays and Extensions. The Contractor will not be entitled to any claim for damages for any hindrance or delay in the progress of the work for any cause whatever, but such hindrance or delay may entitle him to an extension of time sufficient to compensate for same, provided the Contractor will immediately in writing notify the representative, who will study the facts outlined by the Contractor, then decide what extension, if any, is justified.

Extra Work. Extra work will be work for which no unit bid was received in the proposal and will not be construed to mean work for which unit bids were received but that is in excess of the quantity mentioned in the proposal. Extra work shall be done only upon a written order of the representative, and no claim for extra work shall be presented unless supported by a written order of the representative.

At the option of the representative the price of extra work may be agreed upon in advance either as a unit price or a lump sum, or the price may be on the basis of actual cost to the Contractor for labor, materials, and equipment usabe, plus fifteen per cent (15%) to cover all supervision and all

overhead charges.

Minor Modifications: Both parties to the Contract agree to give to the representative the right to alter the work as shown on the drawings or described in the specifications at any time such alterations are considered necessary or desirable, provided such alterations are consistent with the general improvement work described in the plans and specifications when the contract was awarded.

All changes will be made a matter of written record by the representative and approval will be secured from the Forest Service before the work is done. The value of work brought about by any change, including additions and excluding omissions, will be determined by the unit price bid for such work, or in the case of extra work, in accordance with the stipulations in the paragraph on Extra Work.

Measurement of Quantities: Computation of quantities that will be the basis for estimates both monthly and final, shall be in accordance with standard practices, and no local rules or customs will be considered. In computing volume the average end-area method shall be employed, all distances being measured along centerline of the fill. In computing volume of embankment, the lines and grades shown on the drawings will be the dimensions that govern. Such computed volume will not include material allowed for shrinkage; neither will it include unauthorized material deposited outside the limits of said lines.

Partial Payments: Between the twenty-fifth (25th) of each month and the end of the month, the representative will prepare an itemized cost estimate of the total work completed to that period. He will allow for all materials and supplies that have been incorporated into the work but not for materials and supplies not incorporated. The total cost estimate shall include expense

allowed for extra work.

On all such estimates except the one for final payment, the representative shall first deduct ten (10) per cent, then shall deduct all sums paid on previous estimates. The resultant figure is the amount due the Contractor on the estimate.

On the last workday in the month the representative will submit the monthly estimate to the owner, who will take whatever action is necessary to have a check prepared and delivered to the Contractor before the fifteenth (15th) day of the ensuing month in the full amount due him.

Any errors or omissions in a monthly estimate will be subject to correction in the next estimate.

Acceptance and Final Payment: The representative will prepare the final estimate when construction has been completed and when all provisions of the specifications have been complied with. This estimate will be itemized and will include any deductions provided for in the specifications; it will also show the amount of the final payment. The representative will certify this to the owner, who will pay the Contractor after all terms of the laws of the State of Wyoming governing final payment for public work contracts, have been complied with. The present law is given below for information only. Any amendments or revisions in force at the time of final payment will be complied with.

CHAPTER 78, SESSION LAWS OF WYOMING 1935
Original House Bill No. 202

"SECTION 95-301. Hereafter whenever any public work is let by contract the commission, board or person under whose direction or supervision such work is being carried on and conducted and upon whose approval mean and final estimates are paid for the construction of such work, shall, forty days before such final

estimate shall be paid, cause to be published in a newspaper of general circulation, published nearest the point at which such work is being carried on, once a week for three consecutive weeks, and also to post in three conspicuous places on such work, a notice setting forth in substance, that such commission, board, or person has accepted such work as completed according to the plans and specifications and rules set forth in the contract between such commission, board or person and the contractor, and that the contractor is entitled to final settlement therefor; said notice shall also set forth that upon the 41st day (and the notice shall specify the exact date) after the 1st publication of said notice the commission, board or person under whose direction or supervision such work has been carried on will pay to the contractor the full amount due under said contract; and nothing in this section shall be construed as relieving the contractor and the sureties on his bond from any claim or claims for work or labor done or materials or supplies furnished in the execution of the contract."

Final Clean-up: The Contractor shall have removed all rubbish, excess materials, temporary facilities, and equipment from the work or from the camp he maintains and shall leave the premises in a neat and presentable condition acceptable to the Forest Officer in charge. Final cleanup will be required before final payment will be recommended

II. Instructions to Bidders:

Warning to Bidder: Before filling out the proposal, a prospective bidder should note carefully the contents of each section given under the heading "Instructions to Bidders," as each is definitely a part of the specifications and hence remains in force after the contract is awarded.

Bid Bond: To insure the execution of the Contract and Bond for performance of the services, no bid will be considered unless the bidder furn-

ishes a warranty bond or a certified check in the amount of five per cent of the total bid. In case the security is in the form of a certified check it shall be payable to Silver Lake Irrigation District and shall be signed by an official of a solvent bank. Such disposition will be made of it as will accomplish the purpose for which it was submitted. Certified checks will be held uncollected at the bidder's risk. Certified checks of unsuccessful bidders will be returned as soon as practicable after award is made; the certified check of the successful bidder will be returned when the contract is executed. In case the security is a guaranty bond it shall be executed on forms secured from the official issuing the call for bids.

Contract and Performance Bond: The bidder to whom award is made will be required to enter into a written contract and to furnish good and approved surety company bond for the full amount of the contract within fifteen (15) days after he is notified of the acceptance of his proposal. The contract and bond forms may be examined by the bidder upon request of the official that is to receive the bids. If the bidder to whom award is first made fails to enter into a contract or to furnish bond as herein provided, the award may be annulled and the contract let to another responsible bidder, who will fulfill every stipulation embraced herein as though he were the original party to whom award was made.

Examination of Site and Specifications: Prior to preparing his bid, each bidder is required to have visited the site of the proposed work and to have acquainted himself with the general physical conditions. He is further required to have familiarized himself with the details of the plans and the various other documents that compose the specifications. As each bidder must determine for himself the various conditions and factors he will have to meet

should he be awarded the bid, he is solely responsible and hence cannot hold the Silver Lake Irrigation District or its representatives liable for misinformation, misunderstanding, misinterpretation, or lack of information. The specifications were prepared to meet the requirements desired by the Silver Lake Irrigation District from data and information secured for that purpose. However, such data or information is not warranted to be absolutely correct or all-inclusive. The bidder is to satisfy himself as to the accuracy or reliability of all statements, and he is to base his bid on his own conclusions. Should operations under the contract disclose unforeseen conditions resulting in expense not anticipated when the bid was prepared, no claim may be made against the Silver Lake Irrigation District or its representatives.

Clarification of Specifications: Should a prospective bidder desire clarification of some part of the specifications or of the plans that are a part thereof, or should he require an explanation of some seeming inconsistency, error, or omission, he will present to the official that is to receive the bids, a statement of the facts as he interprets them; such statement shall be presented at least forty-eight (48) hours prior to the hour set as the last for submitting bids. At least twenty-four (24) hours prior to the hour set, a reply will be given in writing.

Amendments to Plans and Specifications: Amendments to plans and specifications for the purpose of clarification or explanation may be made by the official who is requesting bids, at any time prior to twenty-four (24) hours before the hour set for receiving bids, and all prospective bidders that have requested or obtained copies of the specifications without said amendments, will be notified. Any amendment will become a permanent part of the specifications and copies will be furnished the Forest Officer.

Interpretation of Estimated Quantities: Bidders are cautioned that the estimate of quantities attached to the proposal will serve, as far as this contract is concerned, only for the purpose of comparing bids. The basis of payment will be actual quantities of work performed and accepted, and if upon completion of the project the actual quantities should show either increase or decrease from the quantities shown in the approximate estimate, the unit price mentioned in the proposal will still prevail.

Ability of Bidder: Each bidder will submit with his proposal a statement setting forth the experience he has had in the prosecution of work of magnitude comparable to that proposed in these specifications. Award to a bidder will not be made unless he can show that he has had sufficient experience to do the work proposed and that he has the ability and the necessary resources to do the work within the time specified.

Causes for Rejection: Any alteration in the proposal by the bidder will be sufficient cause for that bid to be rejected. The bidder must have each item upon which he bids carry its own proportion of the cost as nearly as practicable, and if the bid contains an inadequate or unreasonable price for any item the entire bid may b rejected and given no more consideration than if it had not been presented. A bid may be rejected if all the items in the proposal are not bid upon or if there is failure to comply with any of the provisions required of bidders.

Rejection of Bids: The owner reserves the right to reject any bid or all bids should he decide upon such a procedure, and no bidder will have a claim for damages because of such action by the owner.

Withdrawals: A bidder may withdraw any proposal he has submitted at any time prior to the hour set for the closing of the bids provided the request

for withdrawal is signed in a manner identical with the proposals that he is requesting to be withdrawn. No withdrawal or modification will be permitted after the hour designated for closing the bids.

Statement of work: All the various phases of work enumerated in the specifications with all their individual jobs and overhead, whether specifically enumerated, included by implication, or appurtenant thereto, are to be performed by the contractor under one of the items in the list below, irrespective of whether it is named in the said list. Payment for work performed will be in accordance with the list, subject to changes as provided for under the specifications.

Item No.	Item	Unit	Quantity
1	Embankment, impervious core, Zone 1	C.Y.	2660
2	Embankment, Zone 2 of Dam	C.Y.	3160
3	Excavation, Core Trench	C.Y.	1200
4	Excavation, spillway	C.Y.	2003
5	Excavation, structural	C.Y.	50
6	Rock riprap 18" thick	S.Y.	960
7	Sand and gravel base for riprap 9" thick	C.Y.	210
8	Concrete	C.Y.	12.5
9	Reinforcing steel	Pounds	770
10	Corrugated metal pipe 30" diameter 14 ga. double riveted, asphalt dipped, water tight couplings	L. ft.	114
11	Revamping and installing old Calco No. 101, 30" diameter steel gate and frame on concrete inlet structure	Lump sum	Lump sum
12	Furnishing and installing gate lifting mechanism consisting of gate stem, pipe housing, stem sleeves, stem couplings, oil retainer and hand wheel lift.	Lump sum	Lump sum
13	Removal of existing rock filled timber dam	Lump sum	Lump sum

III. Detailed Specifications:

1. Stripping of Dam Site and Borrow Pits: The area to be occupied by the dam, borrow pits and structures shall be cleared of trees, stumps, brush, rubbish, weeds, roots and other combustibles, which shall be piled and burned to complete ash or disposed of in some other satisfactory manner.

The area to be covered by the dam embankment shall be stripped of sod and top soil to a depth sufficient to expose subsoil or rock free of roots and organic matter. Borrow pits shall be stripped in a like manner.

All strippings shall be stockpiled outside of the area of the dam embankment and reservoir. The strippings shall be returned after construction to allow ample soil for revegetation. Surplus strippings shall be spread to blend in with the surrounding contour of the ground surface.

The abutments and the banks of any pits or holes occurring in the foundation shall be sloped not steeper than 1:1 to provide bond with the embankment.

2. Borrow Pits: All materials required for the construction of the earth fill of the dam which are not available from the core trench excavation shall b taken from borrow pits No. 1 and 2 unless otherwise directed by the representative . Borrow pit No. 1 is located about 1000 feet from the dam site while borrow pit No. 2 is located 2.7 miles from the dam site on an old wagon road leading to the dam site. This old wagon road can be made into a good haul road with a very little work. The exact location of the borrow pits shall be designated by the representative.

After borrow is made, the pits shall be left in a reasonably smooth and even condition. In order to avoid the formation of pools in the borrow pits, drainage ditches shall be constructed from the borrow pit to the nearest

outlet where such drainage ditches are necessary. The Contractor shall visit the site with the representative and ascertain for himself the location of the borrow pits and the conditions under which the earth material must be obtained and transported.

Topsoil strippings shall be returned after the pits are smoothed and left in contour with the surrounding area. The area will be seeded according to Forest Service specifications.

3. Construction of Core Trench and Core Wall: A core trench of the bottom width and depth shown on the plans shall be excavated in the foundation along the main axis of the dam and shall extend the full length of the dam. The side slopes of the core trench shall be ½ to 1.

A core wall having a top width of seven feet and side slopes of 3/4 to 1 shall extend the full length of the dam and from the top of the core trench backfill up to a point 2.5 feet below the top of the dam.

The core trench backfill and core-wall embankment shown on the plans as zone number one, shall be a well blended homogeneous mixture composed of fifty per cent of the material from borrow pit No. 1 and fifty per cent from borrow pit No. 2. Mixing of the material from the two borrow pits shall be accomplished as follows: First deposit a horizontal layer approximately two inches in thickness of the material from borrow pit No. 1. On top of this first layer place a two inch layer of the material from borrow pit No. 2. Blend these two layers together into a homogeneous mixture by means of a suitable disc harrow. The discing shall be sufficient to eliminate all streaks of the separate material and produce a homogeneous mixture. The type if disc harrow used shall be approved by the representative, who shall also specify the minimum number of passes that shall be made with the disc harrow over each two layers of material after the

contractor has made mixing tests with his disc harrow.

After the first two layers are mixed, repeat the operation placing a two inch layer of the material from borrow pit No. 1 and a two inch layer from borrow pit No. 2 on top of the mixed material and then thoroughly mix the two layers as before. The two operations should produce an eight inch layer of mixed material.

Each eight inch layer of mixed material produced shall be compacted by passing a fully loaded sheepsfoot roller over it a minimum of four times. The sheepsfoot roller shall have a minimum weight of 200 pounds per square inch of compaction area of the sheepsfoot projections on the roller.

The fill material shall contain the proper amount of moisture to give the mixed material a high density when compacted. It has been determined by laboratory tests that the optimum water content of a mixture composed of 50 per cent of the material from borrow pit No. 1 and 50 per cent of the material from borrow pit No. 2 is 18 per cent. The water content of the mixed material in zone No. 1 shall be between 16 per cent and 18 per cent of the dry weight of the mixture. If the moisture content of the fill material is deficient, the fill material shall be sprinkled with sufficient water to give the proper moisture content.

The core trench back fill shall be carried to the level of the original ground before the placement of the embankment in the dam is started. The material excavated from the core trench may be used in the downstream portion of zone two of the dam if deemed satisfactory by the representative.

4. Embankment, Zone Two: This embankment includes all the fill material except that in the core trench and core wall, required to produce a dam to the lines and grades shown on the plans plus the additional allowance for settlement

of the fill as specified on the plans. The allowance for settlement is specified on the plans as a percentage of the fill heights.

Before any material is placed in the embankment, the site shall be prepared in accordance with the paragraph on "Stripping of Dam Site and Borrow Pits" of these specifications.

Immediately prior to placement of earth fill material, the surface of the site shall be roughened or corrugated parallel to the centerline of the dam. The corrugations shall be made with a plow or scarifier in such a manner that no smooth or packed surface remains.

The material for the fill in zone two of the dam shall be obtained from borrow pit No. 1 except that the material excavated from the core trench may be used in the downstream portion of zone two if deemed satisfactory by the representative.

Only suitable inorganic material shall be used in the embankment and any material that contains sod, roots, brush or other deleterious matter shall be wasted. No material shall be deposited upon frozen soil and no earth containing frozen lumps shall be deposited in the fill. No rocks having a maximum diameter greater than four inches shall be included in the fill.

The fill material shall be laid in approximately horizontal layers of eight inches in thickness concurrently with the laying of the corresponding eight inch layer of mixed material in the core wall, zone 1. Each lift in both zones shall be made concurrently and each lift shall extend over the full width and length of the dam and shall be kept uniform in thickness and smooth. Each lift in zone 2 shall be compacted by passing a fully loaded sheepsfoot roller over each layer at least four times. The sheepsfoot roller shall have a minimum weight of 200 pounds per square inch of compaction area of the sheepsfoot projections on the roller.

The moisture content of the fill material shall be sufficient to secure maximum compaction. It has been determined by laboratory test that the optimum water content of the material from borrow pit No. 1 is 12.4 per cent. The water content of the fill material for zone No. 2 shall be between 11.5 per cent and 12.4 per cent of the dry weight of the material. If the moisture content of the material is deficient, the fill material shall be sprinkled with sufficient water to give the proper moisture content.

The embankment shall be deposited to the grades and lines shown on the plans and established by the representative. The finished surfaces of the embankment shall be reasonably smooth.

5. Rock Riprap: Riprap shall be placed over the upstream surface of the embankment as shown on the plans. The stone for riprap must be hard and durable. The riprap when completed shall present a generally smooth surface free from depressions or humps. The riprap is to be 18 inches thick measured normal to the surface. A layer of well graded sand and gravel 9 inches in thickness measured normal to the surface shall be placed on the earth slope to form a foundation for the riprap. The rock riprap may be dumped in place providing that placement of the rock starts at the toe of the slope and is carried progressively up to the top of the dam. The rock shall be properly graded in size so that voids will not exist which would permit wave action to disintegrate the slope. The rock shall be firmly anchored in place and if flat, thin slab rocks are used, they shall be laid on edge or with the long axis perpendicular to the slope.

6. Outlet Tube: The outlet tube through the dam shall be installed in the position indicated on the plans. The pipe shall be laid in a trench excavated in the original ground. The trench shall be of a width sufficient to

enable the workmen to properly install the pipe and the side slopes shall not be greater than 1:1. The trench shall first be excavated to a depth of four (4) inches above the grade of the bottom of the pipe. Just prior to placement of the pipe the bottom of the trench shall be brought to grade by carefully shaping the bottom of the trench to fit the pipe. The contractor shall be paid for excavating the trench for the outlet tube and cutoff collars at his unit bid price per cubic yard for structural excavation. The yardage to be paid for shall be the number of cubic yards measured in original position of material acceptably excavated in accordance with the plan or as directed by the representative. The foundation on which the pipe is to be placed should consist of firm material capable of supporting the outlet tube in a satisfactory manner. Soft or spongy material shall be removed and replaced with selected earth thoroughly tamped in place. The pipe foundation should be free from projecting stones, stumps, or other obstructions.

The contractor shall construct concrete cutoff collars around the pipe at the locations shown on the plans in order to prevent seepage between the pipe surface and the fill. The cutoff collars shall be the size called for on the plans.

After the outlet pipe has been installed and inspected by the representative, the trench shall be backfilled in 3-inch layers with each layer thoroughly compacted to a height of one foot above the top of the pipe, the embankment adjacent to the pipe shall be compacted in a like manner to this height. The backfill or embankment adjacent to the cutoff collars shall also be compacted in 3-inch layers to a height of one foot above the top of the cutoff collars. This backfill and embankment adjacent to the pipe and cutoff collars shall be made with fine earth material suitable for compaction in 3-inch

layers and each layer shall be thoroughly compacted with hand or mechanical tampers. The layers on each side of the pipe and cutoff collars shall be placed and tamped concurrently so as to prevent displacement of the pipe or cutoff collars by unequal side thrusts.

If the earth used does not contain sufficient moisture for good compaction, water shall be added to the borrow pit or sprinkled on each layer or earth as placed in order to obtain the proper moisture content for the degree of compaction specified.

Compaction shall be carried directly to all concrete and metal surfaces so that there will be no possibility of seepage at the junction of the pipe and cutoff collar surfaces and the earth backfill or embankment. Hand or mechanical compaction shall be carried from the point of contact of the earth with the structure to a minimum height of one (1) foot over the top of the structure and laterally a minimum of three (3) feet from each outside surface or as far as may be required to blend with the body of the fill which is compacted by a sheepsfoot roller.

7. Corrugated Metal Pipe: The corrugated metal pipe shall be galvanized pure iron, close-riveted on all seams, asphalt dipped and shall conform to Federal Specifications QQ-C-806. The thickness of metal shall be the gage specified on the plans. The pipe lengths shall be joined together with watertight metal connections which are held in place by circumferential bands that shall be tightened carefully to prevent leakage. Each joint shall contain an asphalt coated layer of burlap or felt placed between the pipe and the connector. The pipe installation shall be such that the longitudinal laps are at the sides along the spring line, and the inside circumferential laps point downstream. The metal pipe shall be encased in 6" of concrete.

8. Headgate: The contractor will use the thirty inch diameter Hardesty Model No. 101 vertical slide gate now installed on the steep pipe through the old dam. The contractor will revamp the steel frame and gate ring to fit the new concrete inlet structure. If he is unable to revamp the old gate rings, he will furnish a new gate ring suitable for anchoring to the concrete inlet structure. The contractor will install the old metal slide gate on the concrete inlet structure, and furnish and install the gate lifting mechanism consisting of the gate stem, stem sleeves and couplings, oil retainer, pipe housing and hand wheel lift in accordance with the plans. The gate ring shall be set in place at the time the intake structure is poured to provide a water-tight connection. If it is not available at the time the structure is poured, a recess shall be left in the concrete of large enough dimensions to permit grouting in the anchor bolts and gate seat. The contractor will be paid the lump sum bid for revamping and installing old gate and frame. The contractor will also be paid the lump sum bid for furnishing and installing the gate lift mechanism.

9. Spillway Excavation: The contractor shall excavate the cut spillway to the dimensions shown on the plans. The spillway site is located approximately 2250 feet southeast of Station 1 + 21.5 of the new dam. The excavation shall be wasted close to the spillway at the sites designated by the representative and approved by the Forest Officer in charge. The contractor will be paid for unclassified spillway excavation at his unit bid price per cubic yard for spillway excavation. The yardage to be paid for shall be the number of cubic yards measured in original position of material acceptably excavated in accordance with the plans or as directed by the representative.

The wasting from excavation shall be disposed of to conform with the

contour of the surrounding area. Both the excavation and the waste material will be seeded thus providing revegetation of the raw area.

10. Concrete - Composition: Concrete for structures shall be composed of Portland cement, sand, crushed rock or gravel and water mixed in such proportions as to produce a minimum compressive strength of 3000 pounds per square inch at the end of 28 days.

The proportioning of cement, sand, crushed rock or gravel and water shall be such as to produce a workable concrete mixture, neither too sandy nor too harsh, with no more water in the mixture than is necessary to create the required degree of plasticity for proper handling without segregation of the aggregates. Including the free water in the aggregates, the quantity of water used shall not exceed six (6) gallons per sack of cement.

The exact proportions of the cement, sand and gravel or crushed rock in the concrete mixture will depend on the nature of the aggregates that are used. Generally a concrete of the required strength conforming to the above limitations is secured when mixed in the following proportions: 1 part of cement to $2\frac{1}{4}$ parts of sand and $3\frac{1}{4}$ parts of gravel or crushed rock. The above proportions are by weight. If the aggregates used do not give the required workability when combined in the above proportions, the proportions shall be modified to produce workable concrete of the desired slump without exceeding a water-cement ratio of six gallons of water per sack of cement. The slump at point of placement will be within the limits of four and one-half ($4\frac{1}{2}$) to six (6) inches, depending on the nature of the work done.

The representative shall approve the proportioning of the concrete mixture before any concrete is placed, and, if necessary, shall alter the proportioning during any run of concrete in order to obtain workable concrete of

the required strength.

Reinforcing steel, cement and aggregates shall be stored at the site in such a manner as to prevent deterioration or intrusion of foreign matter. Any material that has deteriorated sufficient to weaken the strength of the concrete shall not be used for concrete.

11. Portland Cement: In general, the cement used in concrete shall be Portland Cement meeting government specifications for the same. (Designated C-33).

If alkali is present in the soil adjacent to the structure in sufficient quantity to be harmful to the concrete, the cement used shall be sulphate resisting Portland Cement meeting A.S.T.M. specifications.

12. Aggregates:

a. General - Concrete aggregates shall conform to the tentative specifications for concrete aggregates (A.S.T.M. Serial Designation C33-37T). Where aggregates conforming to these specifications are not obtainable, aggregates that have been shown by tests or by actual service to produce concrete of the required strength, durability, watertightness, and wearing qualities, may be used if authorized by the representative. Aggregates approved for use by state highway departments are satisfactory

b. Fine Aggregate - The sand particles shall be clean, hard, dense, durable, uncoated, non-organic rock fragments that will pass a screen having ¼ inch square or equivalent round openings. It shall be free from injurious amounts of dust, lumps, soft or flaky particles, shale, alkali, organic matter, loam, and other deleterious substances. The sand shall be well graded from coarse to fine and when tested by means of standard laboratory sieves, shall fall within the following limits of gradation:

	Cumulative Per cent by Weight
Retained as a No. 4 sieve	0 to 8
Retained as a No. 14 sieve	20 to 50
Retained as a No. 48 sieve	80 to 90
Retained as a No. 100 sieve	93 to 100

When subjected to the "Standard Method of Test for Organic Impurities in Sand for concrete," A.S.T.M. Designation C 40-33, the fine aggregate shall not show a color darker than the standard color.

c. Coarse Aggregate: Coarse aggregate shall consist of crushed rock or gravel composed of clean, hard, dense, durable, uncoated fragments free from injurious amounts of soft, friable, thin, elongated, or laminated pieces, alkali, organic or other deleterious matter. Ninety-five (95) per cent of the coarse aggregate shall be retained on a screen having a ¼ inch square mesh or equivalent round mesh. Coarse aggregate shall be well graded from coarse to fine and when tested by means of laboratory sieves, shall conform to the following requirements:

	Per cent
Passing a No. 4 sieve	0 to 5
Passing a 3/8-inch sieve	10 to 30
Passing a 3/4-inch sieve	35 to 70
Passing a 1½-inch sieve	95 to 100

d. Pit Run Sand and Gravel: Pit run sand and gravel may be used if it has a proper gradation, is clean and meets the other requirements for producing good concrete. To produce good workable concrete, a minimum of 37 per cent of the pit run sand and gravel should be sand passing through a No. 4 sieve. If the sand in the mixture is less than 37 per cent, additional sand should be

added to the pit run sand and gravel to give the minimum required amount. This additional sand can undoubtedly be obtained by screening it out of the pit run material now intended for use as concrete aggregate. The proportion of cement to pit run aggregate will vary with the gradation of the aggregate. It is anticipated that a workable mix of the required strength will be obtained when mixed in the proportion of one part of cement to 4 parts of pit run aggregate. These proportions are by weight. If the pit run aggregate used does not give the required workability when used in these proportions, the proportion of pit run aggregate shall be modified to produce workable concrete of the desired slump without exceeding the water-cement ratio of six gallons of water per sack of cement.

13. Water: The water used in mixing shall be reasonably clean and free from objectionable quantities of silt, organic matter, alkali, salts, or other impurities.

14. Mixing: The cement, sand, crushed rock or gravel shall be mixed in a concrete mixer of approved type and size until there is a uniform distribution of the materials throughout the mass. The concrete mixer shall be rotated at the speed recommended by the manufacturer, and mixing shall be continued for at least one minute after all materials are in the mixer. Each mixer shall be completely discharged before being recharged. Overloading of the mixer shall not be permitted. Only sufficient water shall be added in mixing to produce a workable mix.

Before mixing is started, all equipment used for mixing and transportation of concrete shall be thoroughly cleaned.

15. Temperature of Concrete: Concrete when deposited in the forms shall have a temperature of not more than 90°F., and not less than 40°F. In

freezing weather the minimum temperature is 50°F.

16. Forms: Forms to confine the concrete shall conform to the shape, lines and dimensions of the member as called for on the plans. The forms shall be of sufficient strength to hold the concrete and to withstand the necessary pressure, ramming and vibration without deflection from the prescribed line.

The surface of all forms in contact with the concrete shall be rigid, tight and smooth. Wooden forms to be used more than once shall be maintained in serviceable condition and thoroughly cleaned before re-use.

Before placing concrete, the surface of all forms shall be oiled with suitable non-staining oil, and all debris shall be removed from the spaces to be occupied by the concrete.

Forms shall be removed in such a manner as to insure the complete safety of the structure. In no case shall the forms be removed until the members have acquired sufficient strength to support safely and without distortion their weight and the load superimposed upon them.

17. Placing: Concrete shall be placed in the work before it has stiffened sufficiently to require retempering. If any concrete before placement has become so stiff that proper placement cannot be assured, the concrete shall be wasted. All concrete surfaces which have set for 12 hours or more upon or against which concrete is to be placed and to which new concrete is to adhere, shall be cleaned of all laitance and loose or defective surface concrete and the surface of the set concrete treated in accordance with the specifications outlined under the paragraph "Construction Joints".

When the placing of concrete is to be interrupted long enough for the concrete to take its final set, beveled 2-inch by 4-inch lumber shall be placed

in the working face of the concrete with the 4-inch side at the surface and parallel to the working face so as to provide a shear joint between the two pours.

Only methods of transporting and placing which will deliver concrete of the required consistency into the work, without segregation and without objectionable porosity, shall be used. Concrete shall be deposited in all cases as nearly as practicable directly into its final position and shall not be caused to flow in the mass in a manner to permit or cause segregation. No concrete shall be placed in water except with written permission, and the method of depositing the concrete shall be subject to approval. No concrete shall be placed in running water.

No concrete that has been contaminated by foreign material shall be deposited on the work, nor shall retempered concrete be used.

When pouring of concrete is once started it shall be carred on as a continuous operation until the placing of the panel or section is completed. The top surface shall generally be leveled. When construction joints are necessary they shall be made in accordance with instructions given in these specifications.

All concrete shall be compacted by suitable means during the operation of placing and shall be thoroughly worked around reinforcements, imbedded fixtures and into the corners of the forms. Where conditions make compacting difficult or where reinforcement is congested, mortar containing the same proportion of sand to cement as used in the concrete shall be deposited in the forms in such places. Concreting shall be carried on at such a rate that the concrete is at all times plastic and flows readily into the spaces between the bars.

The surface of concrete shall be smooth and free from projections, honey-combing, and other objectionable defects. Immediately upon removal of

forms all unsightly ridges or lips shall be removed, and any undesirable local bulge or exposed surface shall be remedied by tooling and rubbing to the satisfaction of the representative.

When concrete is to be placed during freezing weather the necessary precautions shall be taken to prevent it from freezing for a period corresponding to the moist curing period. When necessary, concrete materials shall be heated before mixing. The temperature of the mix shall never be greater than 100°F. The methods of heating the materials and protecting the concrete shall be approved by the representative. Salt, chemicals, or other foreign material shall not be mixed with the concrete for the purpose of preventing freezing or for any other reason. Before concreting is started all ice, snow and frost should be removed from the interior of forms and from reinforcing steel and embedded parts. Concrete shall not be placed on a frozen sub-grade.

18. Construction Joints: Joints not indicated on the plans shall be made and located so as not to impair the strength of the structure. When a joint is to be made the surface of the concrete shall be thoroughly cleaned and all laitance removed. Immediately before placing of the new concrete the contact surface previously placed shall be thoroughly wetted and all surplus water shall be removed from depressions. After cleaning and wetting, all horizontal concrete surfaces shall be covered with a layer of mortar three-quarters (3/4) of an inch thick consisting of the regular concrete mixture without the coarse aggregate. The regular concrete mix shall be placed immediately thereafter.

19. Finishing: The surface of concrete finished against forms shall be smooth, free from projections and thoroughly filled with mortar. Immediately on removal of forms, all holes left by removal of rods and all voids shall be neatly filled with cement mortar of the same proportions as the mortar in the

concrete. All unsightly ridges or lips shall be removed.

20. Curing and Projection: Exposed surfaces of concrete shall be protected from the direct rays of the sun for at least three (3) days. All concrete shall be kept continuously moist for at least one week after the concrete has been placed. The method of keeping concrete moist shall be by sprinkling or spraying with water, or by other suitable and approved means. In freezing weather, suitable means shall be provided for maintaining the concrete at a temperature of at least 50°F. after placing, until the concrete has thoroughly hardened, but for not less than 72 hours. It shall be kept from freezing for a period of not less than one week.

21. Reinforcement Bars: Metal reinforcement shall conform to the requirements of the "Standard Specifications for Billet-Steel Concrete Reinforcement Bars" of Intermediate Grade, A.S.T.M. Serial Designation A15-30, or for "Rail-Steel Concrete Reinforcement Bars" (A.S.T.M. Serial Designation: A16-35). The provision in these specifications for machining deformed bars before testing shall be eliminated. Metal reinforcement, before being placed, shall be free from rust scale or other coatings that will destroy or reduce the bond. Reinforcement shall be formed to the dimensions indicated on the plans. Cold bends shall be made around a pin having a diameter of four (4) or more times the least dimensions of the bar. Metal reinforcement shall not be bent or straightened in a manner that will injure the material. Bars with kinks or bends not shown on the plans shall not be used. Heating of reinforcement for bending will not be permitted.

Steel bars shall be placed in the concrete wherever shown on the drawings or otherwise prescribed. The steel used for concrete reinforcement shall be so secure in position that it will not be displaced during the depositing of the concrete, and special care shall be exercised to prevent any disturbance of steel

in concrete that has already been placed. In slabs and beams, splices of reinforcement shall not be made at points of maximum stress without the approval of the representative. Splices, where permitted, shall provide sufficient lap to transfer the stress between bars by bond and shear, which is a minimum of 40 diameters.

22. Structural Excavation for Inlet and Outlet Structures: All excavation shall be made in accordance with the lines and elevations shown on the plans and established by the representative. Special care shall be taken not to disturb the bottom of the excavation after excavation to final grade has been made. Wasted excavation shall be disposed of as directed by the representative and approved by the Forest Officer in charge.

The contractor may make the width and length of excavation for the inlet and outlet structures any reasonable distance to enable him to proceed with his construction plan. However, the yardage to be paid for shall be the number of cubic yards, measured in original position, of material acceptably excavated in conformity with the plans or as directed by the representative, but in no case shall any yardage be included in the measurement for payment which is outside of a volume bounded by vertical planes 12 inches outside and parallel to the neat lines of the footings.

Structural excavation shall also include the trench excavation for the outlet tube and cutoff collars made in accordance with the plans and as directed by the representative.

23. Backfilling Around Inlet and Outlet Structures: All spaces excavated and not occupied by the structure shall be backfilled with earth up to the surface of the surrounding ground, with a sufficient allowance for settlement as determined by the representative. All material used for backfill shall be of

a quality acceptable to the representative and shall be free from large or frozen lumps, wood, or other extraneous material. All backfill shall be thoroughly compacted and, in general, its top surface shall be neatly graded. No backfill shall be placed against concrete structures until permission shall have been given by the representative and preferably not until the concrete has been in place 28 days or until the concrete has developed a strength of 3000 pounds per square inch. All backfills shall be revegetated to the satisfaction of the Forest Officer in charge.

24. Embankment Around Inlet and Outlet Structure: This item includes all the fill material around the inlet and outlet structures above the backfill placed in accordance with the plans or as directed by the representative. Only suitable inorganic material shall be used in this embankment. No material containing sod, roots, brush or other deleterious matter shall be placed in the embankment. The fill shall be thoroughly compacted and its top surface shall be neatly graded. The contractor shall be paid for this embankment measured in place at the unit bid price per cubic yard for embankment zone 2. The material for this embankment shall be obtained from a borrow pit No. 1.

This proposal covers construction of a dam for the Silver Lake Irrigation District, Boulder, Wyoming, and includes the furnishing of labor, materials and equipment required to build the dam complete in accordance with the plans and specifications.

In accordance with the Notice to Contractors given by the Silver Lake Irrigation District of Boulder, Wyoming, _____, 19____, and subject to all conditions thereof, the undersigned offers and agrees, should the bid be accepted, to furnish all labor and materials and to perform the work for said owner at the prices shown on the following bid schedule:

The bid schedule below lists the various divisions of construction contemplated in these specifications, together with an estimate of the units of each. With these units as the basis, the bidder will extend each item, using the cost he inserts in the unit column. Any total cost found inconsistent with the unit cost when bids are examined will be deemed in error and corrected to agree with the unit cost which shall be considered correct. It is expressly understood that all the various phases of work enumerated in the plans and specifications, with all their individual jobs and overhead, whether specifically enumerated, included by implication or appurtenant thereto are to be performed by the contractor under one of the items listed below, irrespective of whether it is named in said list.

Item No.	Item	Unit	Quantity	Unit Cost	Total
1	Embankment, impervious core, zone 1	C.Y.	2660		
2	Embankment, zone 2 of dam	C.Y.	3160		
3	Excavation core trench	C.Y.	1200		
4	Excavation, spillway	C.Y.	2003		
5	Structural Excavation	C.Y.	50		
6	Rock riprap 18" thick	C.Y.	960		
7	Sand & gravel base for riprap, 9" th.	C.Y.	210		
8	Concrete	C.Y.	12.5		
9	Reinforcing Steel	Pounds	770		
10	Corrugated metal pipe 30" diameter 14 ga. double riveted, asphalt dipped, water tight couplings	L. Ft.	114		
11	Revamping and installing old Calco No. 101, 30" diameter steel gate and frame on concrete inlet structure	Lump sum	Lump sum		

Item No.	Item	Unit	Quantity	Unit Cost	Total
12	Furnishing and installing gate lifting mechanism consisting of gate stem, pipe housing, stem sleeves, stem couplings, oil retainer and hand wheel lift.	Lump sum	Lump sum		
13	Removal of existing rock filled timber dam	Lump sum	Lump sum		
	Grand Total				$

The undersigned represents that he has examined the area and ground of the proposed work and is thoroughly familiar with the conditions under which the work is to be done, and he agrees that this bid is made subject to the Instructions to Bidders, General Conditions, Specifications, Schedules and Drawings referred to in the Notice to Contractor, and which have been furnished to him by the owner, and that the same are made a part thereof.

The undersigned agrees, in case this bid is accepted, to execute a written contract and to furnish a performance bond, as provided in the Specifications. He further agrees to initiate work under the contract within _____ days after the contract is signed and to complete the same within _____ days thereafter, unless an extension of time is granted as provided in the specifications. The undersigned presents with this bid a certified check, draft or bid bond, in the sum of $_____. Dated this _____ day of _____, 1950.

_____

_____

ATTACHMENT D

DAM SAFETY INSPECTION FORM AND PHOTOGRAPHS

RJH CONSULTANTS, INC.
9800 Mt. Pyramid Court, Suite 330, Englewood, CO 80112

DAM INSPECTION FORM

Name of Dam: Silver Lake Dam
State Inventory ID:
Owner of Dam:
Purpose of Dam: Irrigation
Address:
Hazard Classification: High
City/State/ZIP:
County: Sublette
Inspected By: Edwin R. Friend, P.E., P.G., PMP
Legal Location:
Date of Inspection: October 12, 2017
Latitude:
Estimated Lake Level: 9902.5
Longitude:
Weather Conditions: Sunny, 30ºF

Note: Latitude-Longitude was estimated at the center of the dam crest using Google Earth.

Item No.	Item	Yes	No	N/A	[1]Condition (Satisfactory-Fair-Poor-Unsatisfactory)	Remarks
1	**General Conditions of Dam**				**F**	
A	Alterations to the dam?		X			
B	Development in downstream floodplain?	X				
C	Grass cover adequate?					Not visible. Snow covered and trees
D	Settlements, misalignments, or cracks?		X			
E	Recent high water marks?	X				
2	**Upstream Slope of Dam**				**F**	
A	Erosion, slides, or depressions?	X				At outlet works inlet – since 2014, likely from failure of inlet structure.
B	Trees or excessive vegetation?	X				
C	Animal burrows or holes?		X			
D	Evidence of livestock on dam?		X			
E	Cracks, settlement, or bulges?	X				At outlet works inlet
F	Evidence of slides or scarps?		X			
G	Adequate and sound slope protection (rip-rap)?	X				
3	**Crest of Dam**				**F**	
A	Longitudinal or transverse cracking?		X			
B	Trees or excessive vegetation?	X				
C	Crest arching or bowing?		X			
D	Erosion or ruts?	X				
E	Low areas or depressions?	X				
F	Evidence of livestock on crest?	X				Wildlife
G	Road on crest?		X			
4	**Downstream Slope of Dam**				**P**	
A	Erosion, slides, or depressions?					Not visible
B	Trees or excessive vegetation?	X				
C	Animal burrows or holes?	X				Not visible. Previous reports list several on right side.
D	Evidence of livestock on embankment?		X			
E	Cracks, settlement, or bulges?	X				Rock berm on right side - boulders
F	Toe Drains flowing?			X		
G	Seepage or boils?					Historical seepage. Thick willows.

Item No.	Item	Yes	No	N/A	[1]Condition (Satisfactory-Fair-Poor-Unsatisfactory)	Remarks
5	**Abutment Contacts**				**F**	
A	Erosion, cracks, or slides?		X			Low spot on left slope
B	Seepage or boils?		X			
6	**Inlet Structure**				**U**	
A	Concrete? ☒ Metal? ☐					
B	Spalling, cracking, or scaling?	X				Failed
C	Exposed reinforcement?	X				
D	Corrosion present?	X				Separated
E	Coating adequate?		X			
F	Leakage?	X				
G	Trash rack adequate?		X			
H	Obstacles to inlet?	X				
I	Upstream flow control operative? **Opened** & **closed**		X			Failed and inoperable.
7	**Conduit & Outlet**				**P**	
A	Concrete? ☐ Metal? ☒ CMP					
B	Spalling, cracking, or scaling?	X				Lower 2/3 asphalt is missing; some rust.
C	Exposed reinforcement?		X			
D	Joints displaced or offset?		X			
E	Joint material lost?					Not visible.
F	Leakage of valve or gates? Operative?	X				
G	Other leakage?		X			
H	Conduit misaligned?					(1)
I	Outlet or channel obstructed?		X			
J	Outlet channel eroding?		X			
8	**Concrete Spillway**				**N/A**	
A	Spalling, cracking, or scaling?			X		
B	Exposed reinforcement or deterioration?			X		
C	Joints displaced or offset?			**X**		
D	Joint material lost?			X		
E	Leakage (joints, cracks, other)?			X		
F	Wall displaced?			X		
G	Dissipater deteriorating?			X		
H	Dissipaters clean of debris or vegetation?			X		
I	Erosion at toe of spillway?			X		
J	Spillway undercutting?			**X**		
K	Seepage or boils?			**X**		
9	**Auxiliary (Emergency) Spillway Channel**				**S**	
A	Obstructions, debris, trees?		X			
B	Erosion or sinkholes?		X			
C	Animal burrows or holes?		X			
D	Evidence of livestock on spillway?		X			
E	Spillway channel surface material					Bedrock is granitics.
F	Seepage or boils?		X			
10	**Gates**				**U**	
A	Floodgates broken or bent? **Broken**					
B	Floodgates eroded or rusted? **Rusted**					
C	Floodgates operational?		X			
D	Floodgates leaking?	X				
11	**Instruments**					
A	Structure instrumented?			X		
B	Monitoring performed?			X		
C	Instruments operational?			X		

Item No.	Item	Yes	No	N/A	[1]Condition (Satisfactory-Fair-Poor-Unsatisfactory)	Remarks
12	**Development Below Dam** **(Low or Significant Hazard Dams)**				**F**	
A	Are there homes, businesses, or habitable structures located down-stream of the dam?	X				
13	**Emergency Action Plan** **(High Hazard Potential Dams Only)**				**P**	
A	Emergency action plan?		X			
B	Emergency services contacts up-to-date?		X			
C	Dam breach inundation map?	X				By RJH 2017 – not yet published

Note:

1. Based on the inspection video, there appears to be an area of the pipe with a flatter slope about 20 feet from the inlet. The flatter slope is about 20 to 40 feet long.

Remarks:

Spillway: Rock cut in good condition. Channel width is about 35 feet. Channel depth is about 7 feet. Expansion would likely require blasting.

Outlet Works Inlet: Displaced, failed, concrete structure has moved into the pipe, trashrack warped, large depression above the inlet appears to be related to surface erosion into the outlet after the damage. About 1 to 3 feet of vertical erosion, water flowing around inlet, holes in pipe at inlet, concrete structure fallen into pipe with exposed embankment behind, valve stem exposed, no floor on inlet structure.

Outlet Works Outlet: Good condition, rust on lower 2/3 of corrugated metal pipe.

According to the owner, the inlet has always been recessed into the dam.

Heavy tree growth on downstream slope with significant willows. Expect significant seepage on right half of dam.

Need to remove/replace inlet and add about 10 to 20 feet of pipe where valve stem is exposed downstream of inlet structure. Erosion has occurred around the inlet 2 to 3 feet laterally.

Reservoir Rim Potential Borrow:

1. Clayey Sand - 20 to 40 percent low to medium plastic fines, 10 to 30 percent fine to coarse grained gravel, medium sand fine to coarse grained.
2. Well Graded Sand and Gravel - Medium sand, less than 10 percent low to nonplastic fines, 10 to 40 percent gravel.
3. Excavation will likely be required because material is in selective pockets with unknown thickness.

Signature:

Telephone Number: (303) 225-4611

[1]**Condition**: Rate the condition of Sections 1 – 11 on inspection form either: Satisfactory, Fair, Poor or Unsatisfactory.

Satisfactory - No existing or potential dam safety deficiencies are recognized. Acceptable performance is expected under all loading conditions (static, hydrologic, seismic) in accordance with the applicable regulatory criteria or tolerable risk guidelines.
Fair - No existing dam safety deficiencies are recognized for normal loading conditions. Rare or extreme hydrologic and/or seismic events may result in a dam safety deficiency. Risk may be in the range to take furtber action.
Poor - A dam safety deficiency is recognized for loading conditions which may realistically occur. Remedial action is necessary. Poor may also be used when uncertainties exist as to critical analysis parameters which identify a potential dam safety deficiency. Further investigations and studies are necessary.
Unsatisfactory - A dam safety deficiency is recognized that requires immediate or emergency remedial action for problem resolution.

Original access road

Original access road

Existing spillway looking upstream

Existing spillway looking downstream

Upstream slope and outlet works inlet structure

Damaged inlet structure

Damaged CMP outlet pipe at the inlet structure

Embankment crest, left abutment looking towards the right abutment

Downstream embankment slope, outlet works is behind large tree in the middle of the photo

Outlet works CMP, outlet structure looking upstream

Outlet works CMP near outlet structure – looking upstream

Outlet works CMP middle of dam structure – looking upstream

Outlet works CMP at inlet structure – looking upstream

Outlet structure

Embankment upstream slope

Embankment downstream slope

Spillway looking upstream

Embankment upstream slope

ATTACHMENT E

ORIGINAL DRAWINGS AND SPECIFICATIONS

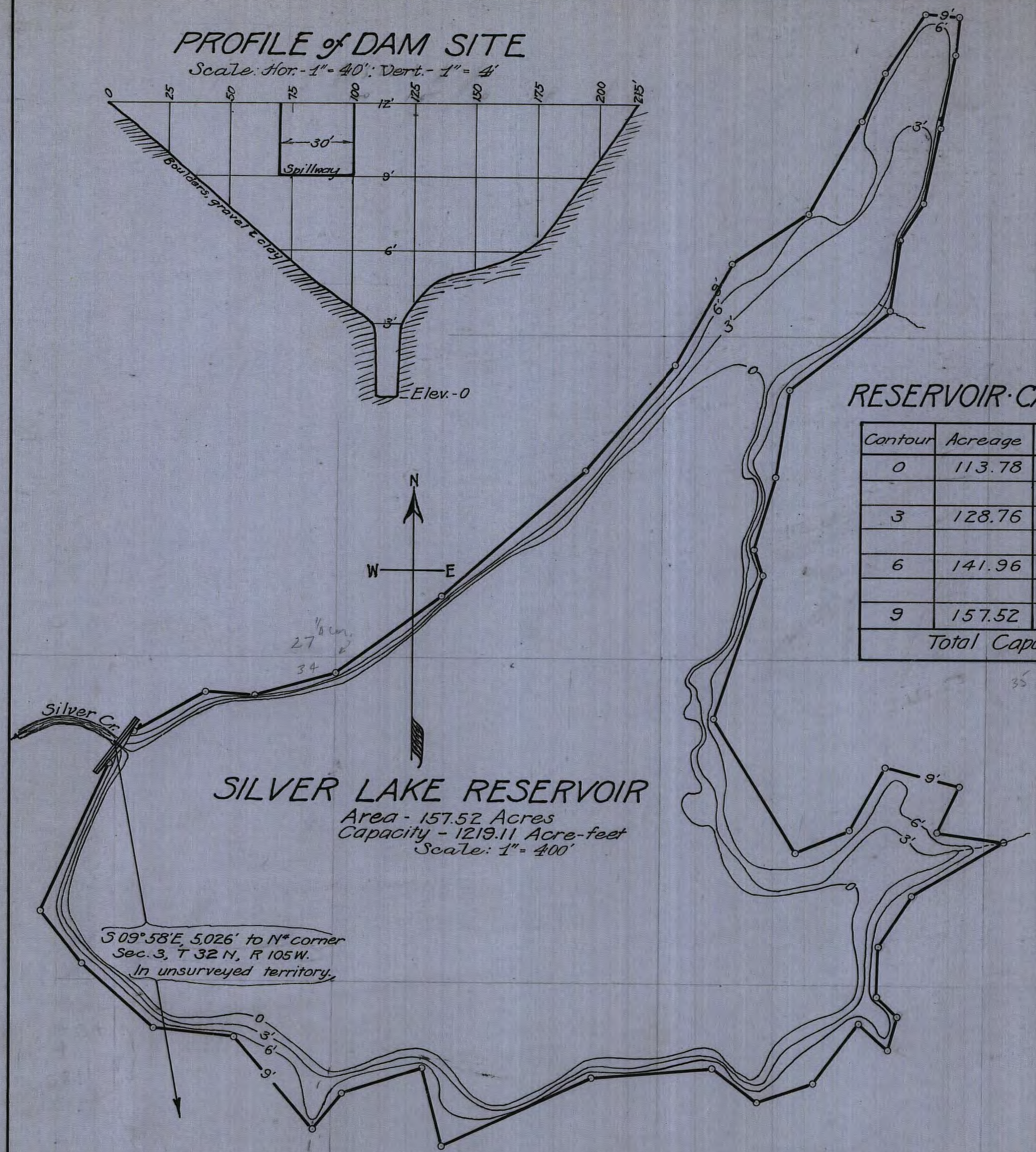

RESERVOIR·CAPACITY·TABLE

Contour	Acreage	Average	Acre-feet
0	113.78		
		121.27	363.81
3	128.76		
		135.36	406.08
6	141.96		
		149.74	449.22
9	157.52		
Total Capacity --			1,219.11

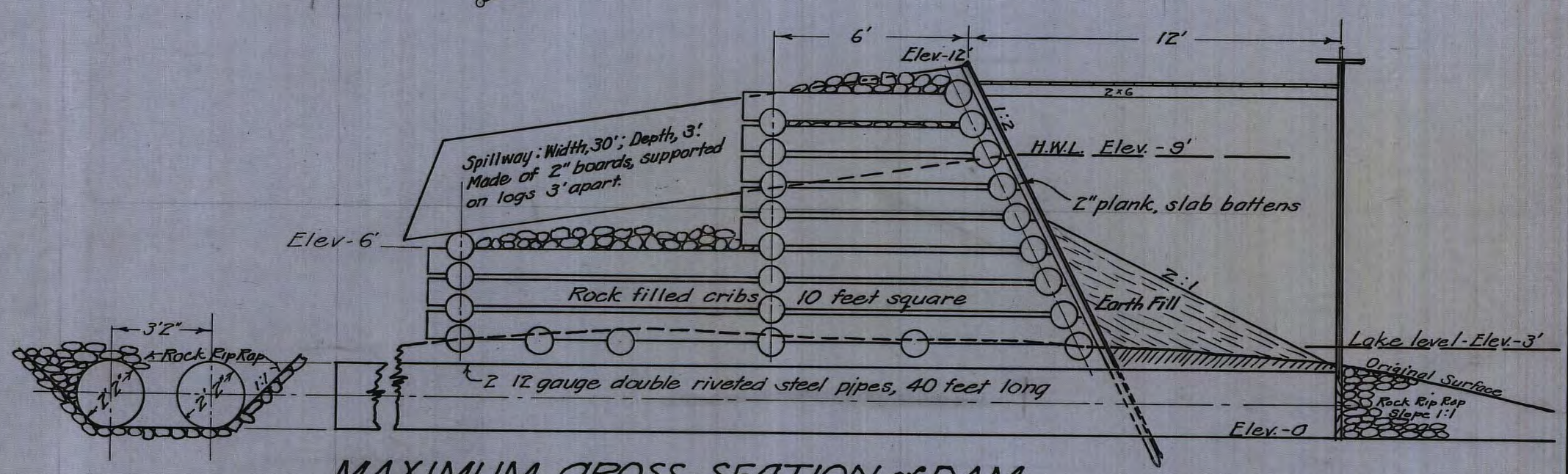

MAXIMUM CROSS-SECTION of DAM

Scale: 1" = 4'

State of Wyoming } ss
County of Sublette }

I, C.C. Feltner, of Pinedale, Wyoming, hereby certify that this map was made from notes taken during an actual survey made by me Sept. 11th, 1924, and that it correctly represents the works described in the accompanying application

C.C. Feltner
Surveyor.

Approved December 2, 1924
Frank C. Emerson
State Engineer.

MAP

TO ACCOMPANY APPLICATION FOR

SILVER·LAKE·RESERVOIR

APPLICANT:

SILVER LAKE RESERVOIR CO.

Ed. P. Steele, Sec'y,

BOULDER, — WYO.

3970 Res.

124/247 D.3

RESERVOIR CAPACITY TABLE

Contour	Acreage	Average	Acre Feet
85.0	94.30		
		98.35	147.52
86.5	102.40		
		111.27	389.44
90.0	120.15		
		133.47	667.35
95	146.80		
		147.00	14.70
95.1 W.L.	147.20		
Total Original Appropriation			1219.11
95.1	147.2		
		163.60	932.52
100.8	180.0		
Enlargement			932.52
Total Capacity After Enlargement			2151.63

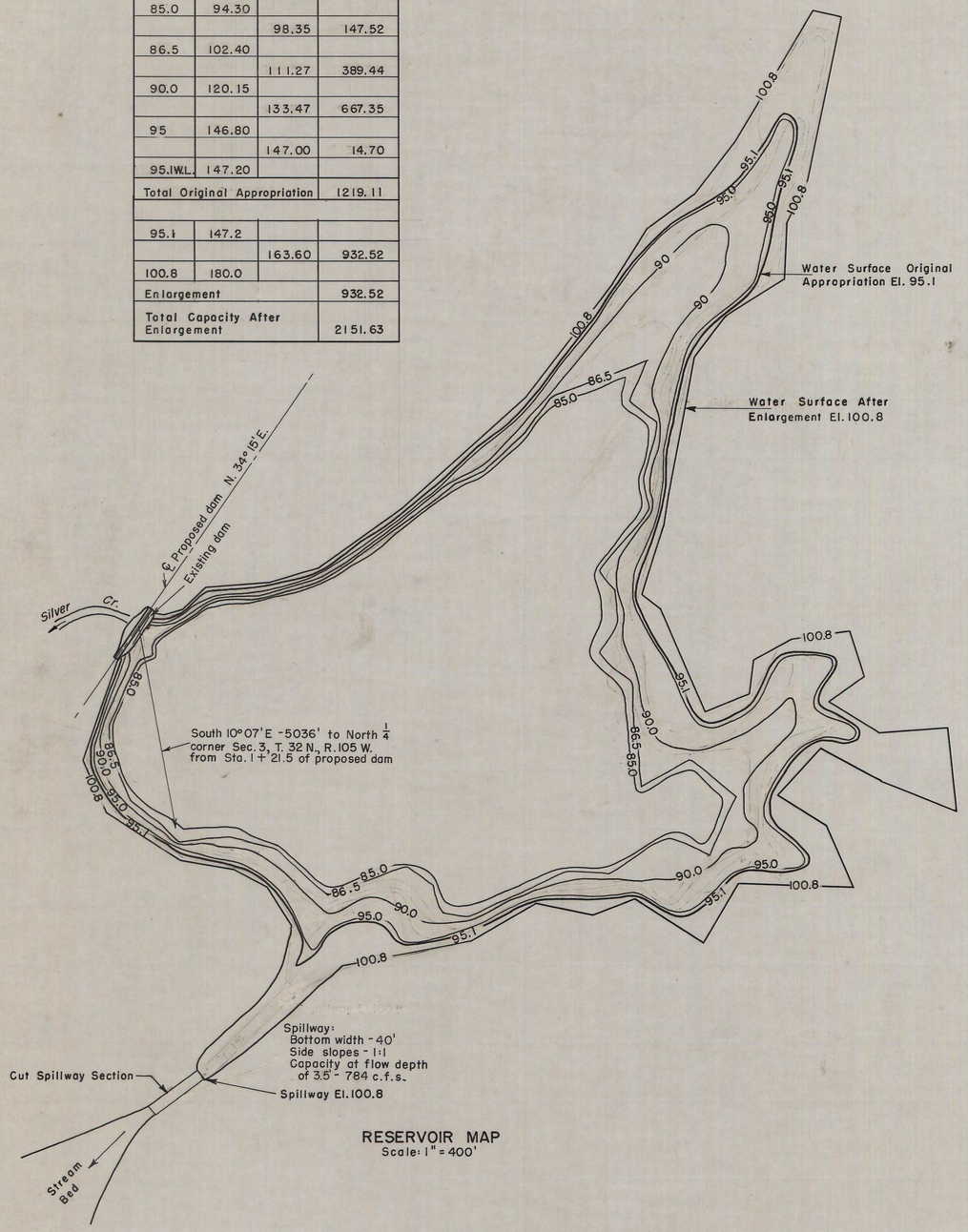

RESERVOIR MAP
Scale: 1" = 400'

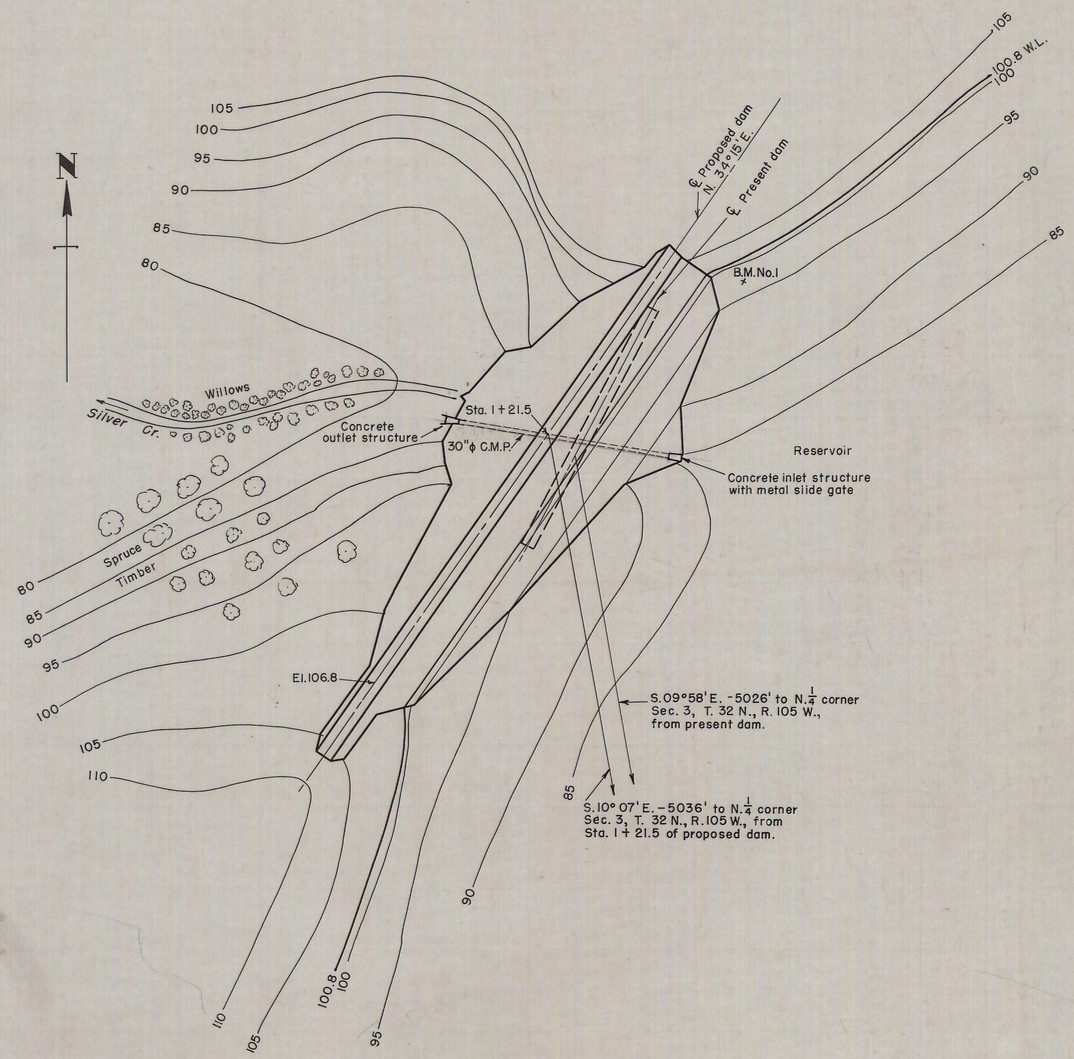

TOPOGRAPHIC MAP AT DAM SITE
Scale: 1" = 50'

STATE OF WYOMING
County of Sublette } ss.

I, Floyd A. Bishop, of Pinedale, Wyoming, hereby certify that this map was made from notes taken during an actual survey made by C. C. Feltner on Sept. 11, 1924 for section corner tie and from notes taken during an actual survey made by me, Floyd A. Bishop of Pinedale, Wyoming, on August 14 and 15, 1947 and August 17, 1948, and that it correctly represents the irrigation works and the location of streams as described in the accompanying application.

Floyd A. Bishop
Engineer

Registration No. 303

APPROVED DECEMBER 2, 1950
L. C. Bishop
L. C. BISHOP - STATE ENGINEER

SCANNED JUN 30 2006

REVISED 2-23-49 R.A.W.

Map and plans to accompany application for
RECONSTRUCTION OF DAM
APPLICANT - SILVER LAKE IRRIGATION COMPANY
Boulder, Wyoming 5769 RES.

SILVER LAKE DAM
TOPOGRAPHIC MAPS OF RESERVOIR AND DAM SITE
SUBLETTE COUNTY, WYOMING

U. S. DEPARTMENT OF AGRICULTURE
SOIL CONSERVATION SERVICE
H. H. Bennett, Chief

REGION FIVE — LINCOLN, NEBRASKA

REFERENCE

CARTOGRAPHIC APPROVAL: J. T. Casey
TECHNICAL APPROVAL: E. J. Francis

COMPILED	TRACED	CHECKED	DATE	DRAWING NO.
F.A.B. W.R.E.	R.H.B.	W.R.E.	10-5-48	5,P-10,815

155/230 Sheet 1 of 3

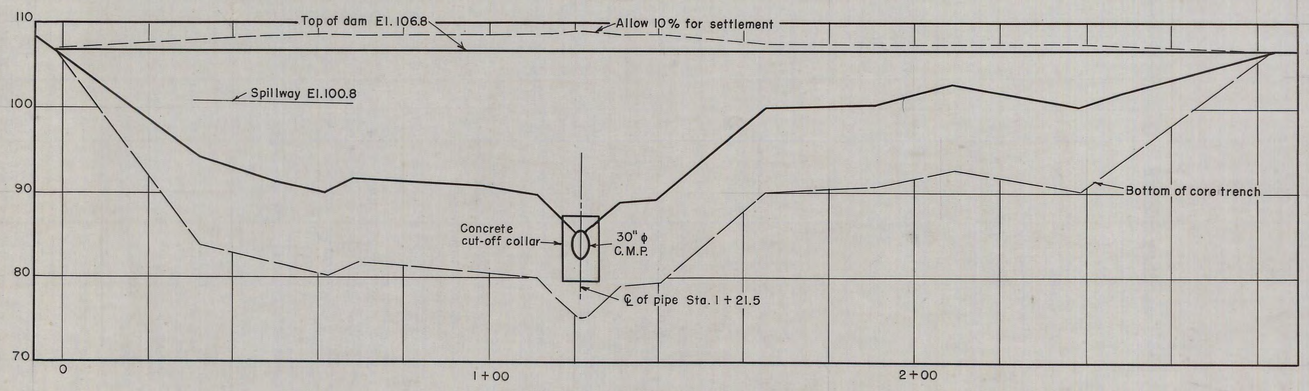

PROFILE ON CENTERLINE OF DAM
Scales: Horiz. - 1" = 20'
Vert. - 1" = 10'

QUANTITIES

ITEM	UNIT	QUANTITY
Embankment, impervious core (Zone 1)	Cu. yd.	2660
Sand and gravel base for riprap, 9" thick	"	210
Embankment, Zones 2 of dam	"	3160
Excavation, core trench	"	1200
Excavation, spillway	"	2003
Rock riprap, 18" thick	Sq. yd.	960
Concrete	Cu. yd.	12.5
Reinforcing steel	Pounds	770
Corrugated metal pipe, 30" diam., 14 ga. double riveted and asphalt dipped, water-tight couplings	L. ft.	114
Gate stem 1½ diam.	"	70
Pipe housing 3" diam.	"	63
Handwheel lift, Type B, 30" wheel, Hardesty	Each	1
Stem sleeves	"	2
Stem couplings	"	3
Oil retainer	"	1
Structural excavation for inlet and outlet structure, and pipe trench	Cu. Yd.	50

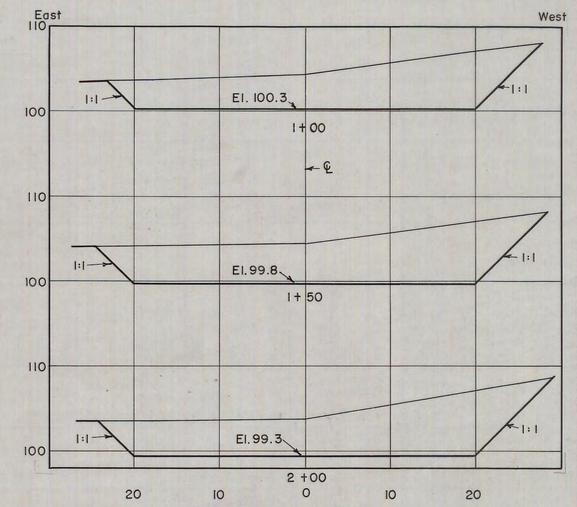

CROSS SECTIONS OF SPILLWAY
Scale: 1" = 10'

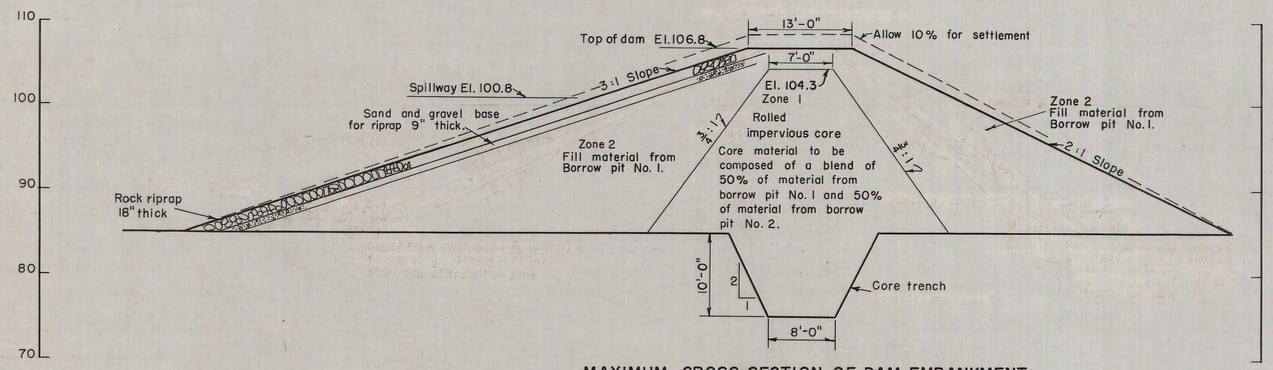

MAXIMUM CROSS-SECTION OF DAM EMBANKMENT
Scale: 1" = 10'

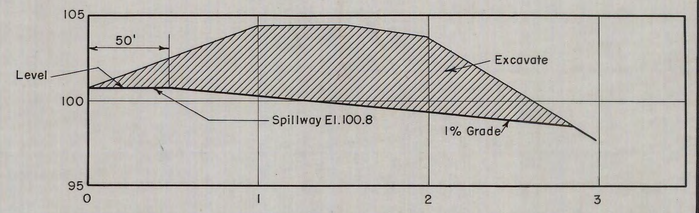

PROFILE ON CENTER LINE OF SPILLWAY
Scale: Horiz. - 1" = 50
Vert. - 1" = 5'

SPILLWAY DATA
Drainage area = 7.86 sq. mi.
Spillway: 40' bottom, 1:1 side slopes
He = 3.5 ft.
Q = 784 c.f.s.

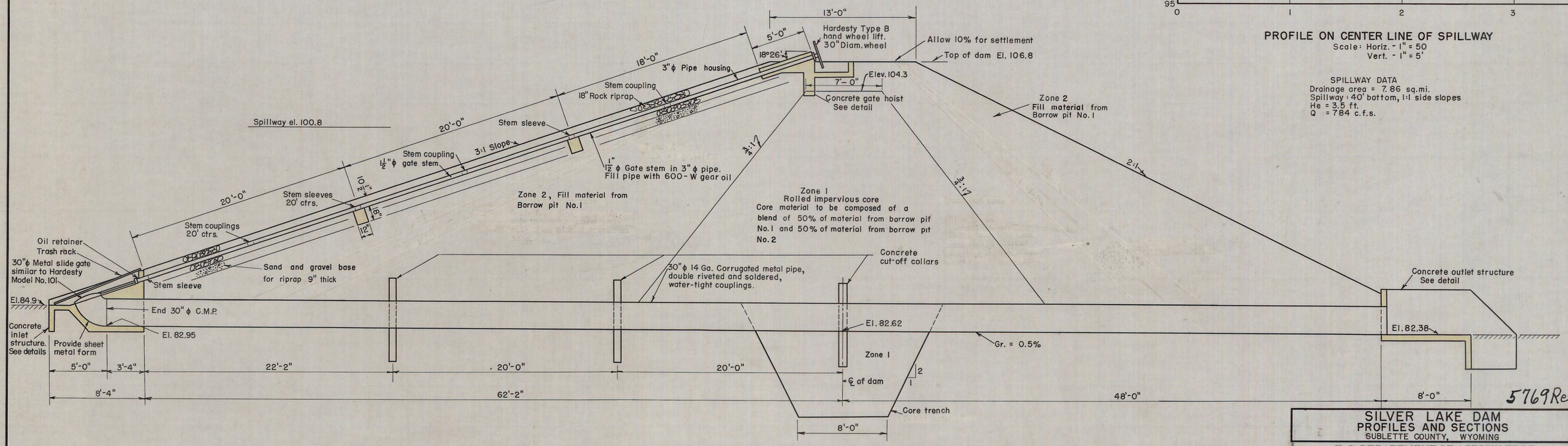

SECTIONAL ELEVATION OF DAM ON CENTER LINE OF DRAW DOWN TUBE
ST. 1 + 21.5
Scale: 1" = 5'

5769 Res.

SCANNED JUN 30 2006

Revised 2-7-50

SILVER LAKE DAM
PROFILES AND SECTIONS
SUBLETTE COUNTY, WYOMING

U. S. DEPARTMENT OF AGRICULTURE
SOIL CONSERVATION SERVICE
H. H. Bennett, Chief

REGION FIVE — LINCOLN, NEBRASKA
REFERENCE

CARTOGRAPHIC APPROVAL			TECHNICAL APPROVAL	
J. T. Casey				
COMPILED	TRACED	CHECKED	DATE	DRAWING NO.
W.R.E.	R.H.B.	W.R.E.	10-5-48	5,P-10,815

155/230 Sheet 2 of 3

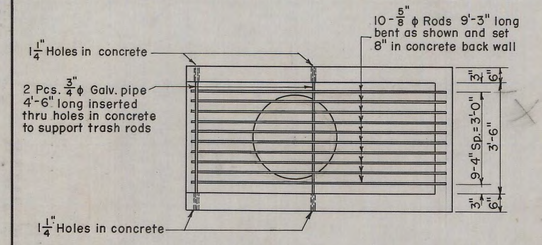

PLAN SHOWING TRASH RACK

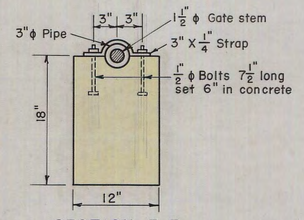

SECTION E-E
Scale: 1" = 1'-0"

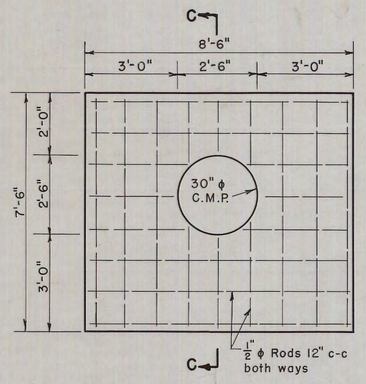

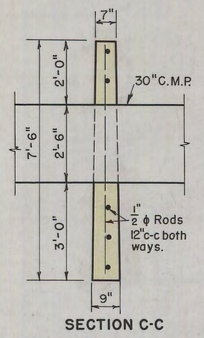

SECTION C-C

DETAILS OF CONCRETE CUT-OFF COLLAR
Scale: ⅜" = 1'-0"

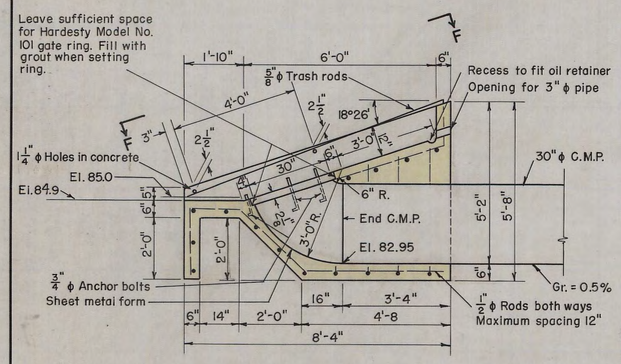

SECTIONAL ELEVATION A-A

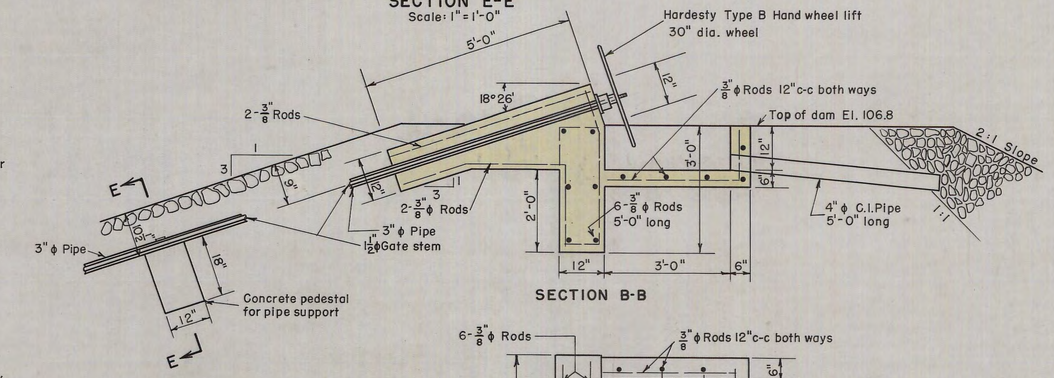

SECTION B-B

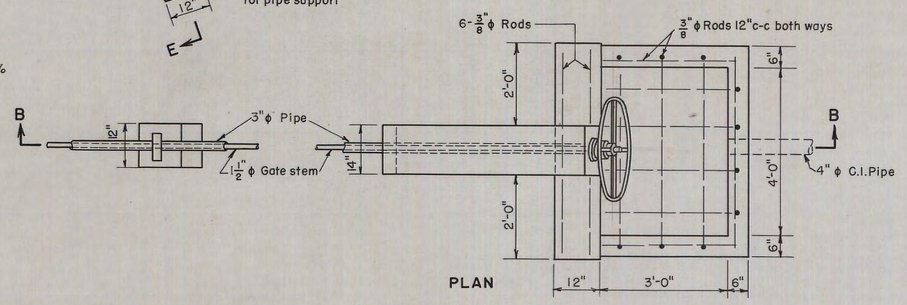

PLAN

DETAILS OF GATE HOIST
Scale: ½" = 1'-0"

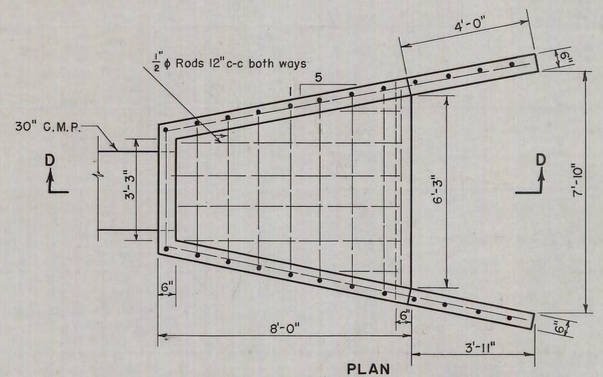

PLAN

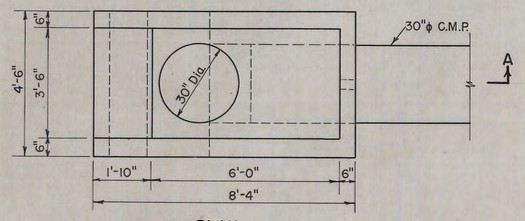

PLAN
TRASH RACK AND GATE NOT SHOWN

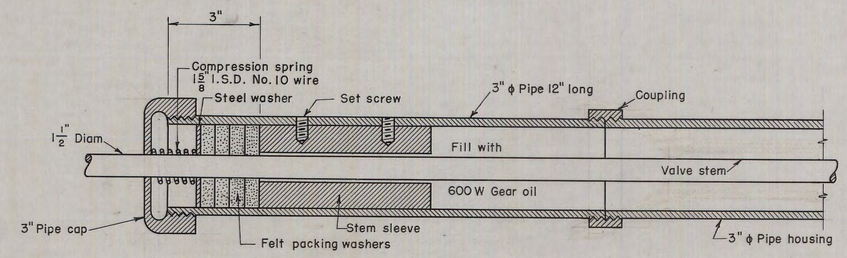

DETAIL OF OIL RETAINER
Not to scale

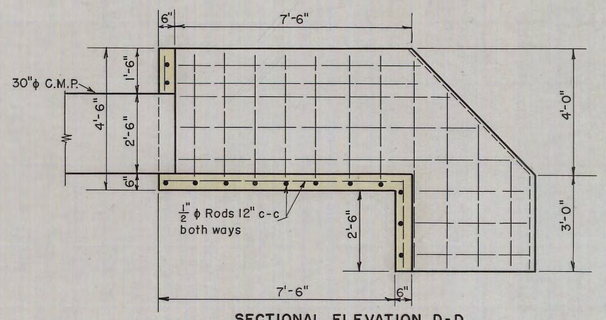

SECTIONAL ELEVATION D-D

DETAILS OF OUTLET STRUCTURE
Scale: ⅜" = 1'-0"

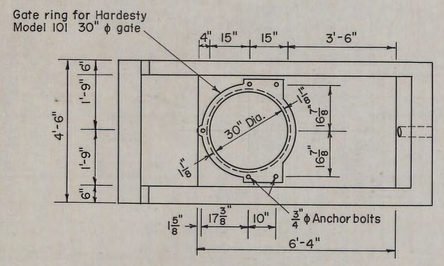

VIEW F-F
GATE COVER AND FRAME NOT SHOWN

DETAILS OF CONCRETE INLET STRUCTURE
Scale: ⅜" = 1'-0"

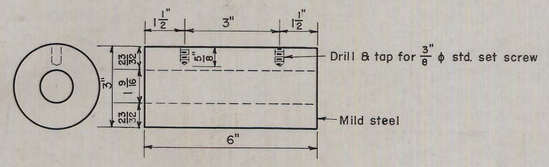

STEM SLEEVE
3 Required

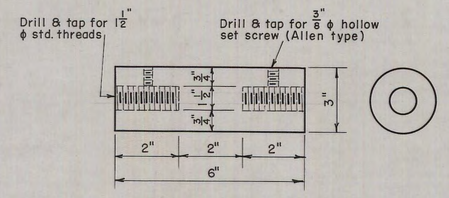

STEM COUPLING
3 Required

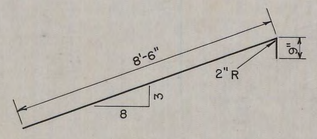

BENDING DIAGRAM FOR TRASH RODS

5769 Res.

SILVER LAKE DAM
DETAILS
SUBLETTE COUNTY, WYOMING

U. S. DEPARTMENT OF AGRICULTURE
SOIL CONSERVATION SERVICE
H. H. Bennett, Chief

REGION FIVE — LINCOLN, NEBRASKA

REFERENCE

CARTOGRAPHIC APPROVAL			TECHNICAL APPROVAL	
COMPILED	TRACED	CHECKED	DATE	DRAWING NO.
W.R.E.	R.H.B.	W.R.E.	10-5-48	5,P-10,815

SCANNED JUN 30 2006

155/230

Sheet 3 of 3

S P E C I F I C A T I O N S

FOR

CONSTRUCTION OF SILVER LAKE DAM

BOULDER, WYOMING

--- - - -

I. GENERAL CONDITIONS

1. Location and General Description.

The Silver Lake Irrigation District, Boulder, Wyoming, requires the construction of an earth dam containing a corrugated metal outlet pipe with an inclined metal slide gate and the excavation of a spillway in accordance with these specifications and with the attached plans that are a part of these specifications. The dam is located on Silver Creek in unsurveyed territory about seventeen miles east of the town of Boulder, Wyoming. It is in the Wyoming National Forest on land owned by the Federal Government and administered by the United States Forest Service. Station 1 + 21.5 on the center line of the dam is located North 10°- 07' West 5036 feet from the northwest corner of the northeast quarter of Section 3, Township 32 north, Range 106 west. The new dam is to be constructed in approximately the same location as an existing old rock filled timber dam, which is to be removed by the contractor. The project site is located at an altitude of approximately 9930 feet. Construction of the dam will begin about the first of August 1950. Work in the winter in this high altitude is impossible due to snow and freezing temperatures. Spring floods and the need of the water for irrigation make it inadvisable to start work until the above mentioned time.

Definition of Terms

Under the terms of the contract the Party of the First Part is the Silver Lake Irrigation District, and the Party of the Second Part is the person, firm, or corporation to whom award is made.

For purposes of clarification, it should be understood that the Silver Lake Irrigation District has entered into an agreement with the Soil Conservation Service of the United States Department of Agriculture (said agreement being no part of these Specifications) for engineering and other technical assistance in the design and construction proposed herein. The Silver Lake Irrigation District has appointed the Soil Conservation Service its sole designated agent with full authority to interpret specifications, to supervise construction, and to prosecute the work in accordance with these specifications. The Party of the Second Part in signing the contract recognizes and accepts this relationship.

The word "Representative" will refer to the official whom the Soil Conservation Service designates as its field representative, and that official will be the designated agent of the Silver Lake Irrigation District in accordance with the explanation given above.

The word "Owner" will mean the Silver Lake Irrigation District of Sublette County, Wyoming, for whom the work is to be performed. The Owner will be responsible for payment in accordance with the terms of the Contract.

The word "Contractor" as hereinafter used will designate the Party of the Second Part. Subcontractors as such will not be recognized.

Contractor To Be Present or Represented

The Contractor at all times shall be present upon the work or shall have a responsible agent or foreman who will, in writing, have full authority to act for the Contractor and to carry out instructions given him by the Representative. The foreman shall be qualified to handle all phases of the work covered herein and shall be able to read plans and to interpret specifications. At no cost to the Contractor a reasonable number of copies of the Plans and Specifications will be supplied him for use during construction operations. It will be the responsibility of the Contractor to see that all his personnel give their fullest cooperation to the Representative even though all dealings of the Representative, except in emergencies, will be with the Contractor or his foreman.

Scope of Work Covered by Specifications

Unless specifically excepted in the Specifications, the Contractor will furnish all materials, implements, machinery, equipment, tools, supplies, transportation, and labor necessary to do all the work enumerated or provided for under the terms and stipulations of the Specifications, the Proposal, and the Contract.

Plans and Working Designs

The approved plans will be supplemented by such work drawings as are necessary to adequately control the work. It is mutally agreed that all authorised alterations affecting the requirements and the information given on the approved plans will be in writing and approved by the Representative. When at any time reference is made to the "Plans" the interpretation shall be the plans as affected by all authorised alterations then in effect.

Responsibility for Damages

The Contractor assumes entire responsibility for the safety of his employees and of his plant, materials, and supplies, and for any damage or injuries done by said employees or done to any of them from any source or cause. He shall save harmless the Owner and his representative and employees from all suits, actions, or claims resulting from said injuries or damage or from any act or omission of the Contractor, his employees, or his agents in the execution of the work. Said responsibility shall continue until all construction will have been completed and accepted. The Owner upon the recommendation of the Representative may withhold any money due under the Contract in an amount he may consider necessary to cover claims for damages or costs of suits until such are settled or disposed of and satisfactory evidence to that effect furnished him.

Damage to Construction

The Contractor shall safeguard, until all work under contract is formally accepted, all construction both complete and incomplete, against damage and destruction, and should damage result he will be required to repair it at his expense in a manner conforming to these Specifications. In the absence of definite instructions in the Specifications, reconstruction shall be done in a manner suitable to the Representative.

It is understood the Contractor would not be expected to pay for damages done to any work undertaken by the Owner unless through carelessness of the Contractor such work was damaged.

Patent Infringements

The Contractor shall hold and save the Owner harmless from all demands, or liabilities for alleged use or manufacture of any patented or unpatented invention, idea, or process on work or on articles herein contracted.

Authority of Representative

The Representative will decide all questions that arise relative to the interpretation of the Specifications and the Contract. He will impartially see that each party to the Contract complies with his part of the Specifications.

Representative To Be Referee

The Representative will pass upon the quality and acceptability of the workmanship and of the materials and supplies used under the Contract. It will be his duty to enforce the Specifications in a fair and unbiased manner, although he has the right to waive any term that may be found unreasonable and out of line with the general spirit of the Specifications. If a variation from any requirement is allowed, the Representative will grant same in writing with the reasons for his action outlined, but the Contract will in no manner be vitiated by such action.

Acceptance or Rejection of Materials or of Work

The Representative will inspect all materials, manufactured articles, supplies, equipment, and construction, and he will accept items found satisfactory and reject those found unsatisfactory. He will have the right, should he reject any item or condemn any construction, to stipulate when the item is to be removed from the plant or the site of construction, and he will have the right to designate how quickly the construction he has condemned will have to be removed or corrected. The Owner will not pay for materials or workmanship not acceptable to the Representative. If the Contractor fails to comply with the orders of the Representative with regard to removal of material or correction of unsatisfactory work, the Representative may have the material removed or the correction made at the Contractor's expense.

Objectionable Employees

The Contractor will be required to discharge any employee and see that he leaves the vicinity promptly if the Representative makes a request of this nature in writing and states that the individual is incompetent or is objectionable for some other reason.

Laws and Regulations

The Contractor shall familiarize himself with all laws and regulations of Federal, State, and local authorities that might in any manner affect the conduct of his work, so that he and those working for him may comply strictly with such laws and regulations. He shall save harmless the Owner and his representative and employees from any claim arising from alleged violation or actual violation of any such law, by-law, ordinance, or regulation. In accordance with such regulations he shall protect his employees with adequate compensation insurance and shall meet all other laws and regulations dealing specifically with labor.

Sanitary Provisions

Satisfactory latrines will be installed and maintained by the Owner at the site of the construction work, and the Contractor and his employees will observe recognized sanitary regulations there. The Contractor shall install and maintain latrines in accordance with regulations of the State Department of Public Health and other authorities having jurisdiction, at his plant or his construction camps.

Lines and Grades

Responsibility for setting stakes and for giving lines and grades rests with the Representative. The Contractor should give him ample notice when surveys will be needed so that stakes can be promptly set without causing costly delays or troublesome inconveniences to anyone. Preservation of survey stakes and marks is the responsibility of the Contractor. If such stakes are destroyed before having fulfilled their purpose, the Contractor may be charged for the expense of replacement.

Errors, Omissions, and Inconsistencies

Neither the Owner nor the Contractor will be allowed to take advantage of an error, omission, or inconsistency. Errors, omissions, or inconsistencies discovered by any bidder prior to the opening of the bid will be clarified in accordance with the paragraph, "Clarification of Specifications."

Initiation, Prosecution, and Completion

The Contractor, if weather conditions permit, shall begin construction work on or before August 1, 1950. Each bidder will state in his proposal the number of consecutive calendar days that he would require after the Contract is signed to complete the construction, but no proposal will be considered where a period of more than 90 days is required. The Owner reserves the right to give preference to a bidder who has offered to complete the work in the shortest time and who, by reputation, has the ability to live up to the time offered in his proposal and has the equipment and resources to accomplish the work within said period.

If the Contractor fails to complete the work within the time specified, including any authorized extensions of time, the Owner may deduct from any sums due the Contractor fifteen dollars ($15.00) for each day beyond the total authorized time. This $15.00 per day charge will be collected as liquidated damages incurred by the Owner as a result of the delay and not as a penalty against the Contractor for failure to meet the terms of the Specifications.

Sufficiency of Time

The period allowed for construction and completion of the proposed work, unless extraordinary and unforeseen difficulties arise, is sufficient if a properly equipped and ably managed firm takes advantage of each good

working day. Should extraordinary and unforeseen difficulties arise that in the opinion of the Contractor justify an extension of time, he shall in writing apply to the Representative for an extension, and the Representative shall in writing grant the extension required, or a portion of it, or reject the request.

Should the Representative at any time decide that work is not progressing at the rate specified elsewhere in these Specifications, he shall notify the Contractor in writing and give him a specified number of days in which to correct the condition. A copy of the notification to the Contractor shall be sent to the Owner.

At the expiration of the stipulated period if the Contractor has not corrected the condition, a representative of the Owner and a representative of the Contractor will meet with the Representative to form a board to decide what steps should be taken to correct the situation. This board may decide that additional labor and equipment should be hired, or under extreme conditions the full charge of operations should be withdrawn from the Contractor and placed in the hands of the Representative for a definite prescribed period or until the construction is completed. Under such circumstances the Representative has the right to take over the Contractor's entire plant and crew or any portion of either.

Any cost to the Owner in excess of the cost computed by contract rates, as a result of the action of the board, shall be deducted from any sums due or to become due the Contractor. Failure of the Representative to notify the Contractor promptly, should progress fall behind schedule, shall not be construed to affect the right of the Representative to later take action.

Delays and Extensions

The Contractor will not be entitled to any claim for damages for any hindrance or delay in the progress of the work for any cause whatever, but such hindrance or delay may entitle him to an extension of time sufficient to compensate for same, provided the Contractor will immediately in writing notify the Representative, who will study the facts outlined by the Contractor, then decide what extension, if any, is justified.

Extra Work

Extra work will be work for which no unit bid was received in the Proposal and will not be construed to mean work for which unit bids were received but that is in excess of the quantity mentioned in the Proposal. Extra work shall be done only upon a written order of the Representative, and no claim for extra work shall be presented unless supported by a written order of the Representative.

At the option of the Representative the price of extra work may be agreed upon in advance either as a unit price or a lump sum or the price may be on the basis of actual cost to the Contractor for labor, materials, and

equipment usage, plus fifteen percent (15%) to cover all supervision and all overhead charges.

Minor Modifications

Both parties to the Contract agree to give to the Representative the right to alter the work as shown on the drawings or described in the Specifications at any time such alterations are considered necessary or desirable, provided such alterations are consistent with the general improvement work described in the Plans and Specifications when the Contract was awarded.

All changes will be made a matter of written record by the Representative. The value of work brought about by any change, including additions and excluding omissions, will be determined by the unit price bid for such work, or in the case of extra work, in accordance with the stipulations in the paragraph on Extra Work.

Measurement of Quantities

Computation of quantities that will be the basis for estimates both monthly and final, shall be in accordance with standard practices, and no local rules or customs will be considered. In computing volume the average end-area method shall be employed, all distances being measured along centerline of the fill. In computing volume of embankment, the lines and grades shown on the drawings will be the dimensions that govern. Such computed volume will not include material allowed for shrinkage; neither will it include unauthorized material deposited outside the limits of said lines.

Partial Payments

Between the twenty-fifth (25th) of each month and the end of the month, the Representative will prepare an itemized cost estimate of the total work completed to that period. He will allow for all materials and supplies that have been incorporated into the work but not for materials and supplies not incorporated. The total cost estimate shall include expense allowed for extra work.

On all such estimates except the one for final payment, the Representative shall first deduct ten (10) percent, then shall deduct all sums paid on previous estimates. The resultant figure is the amount due the Contractor on the estimate.

On the last workday in the month the Representative will submit the monthly estimate to the Owner, who will take whatever action is necessary to have a check prepared and delivered to the Contractor before the fifteenth (15th) day of the ensuing month in the full amount due him.

Any errors or omissions in a monthly estimate will be subject to correction in the next estimate.

Acceptance and Final Payment

The Representative will prepare the final estimate when construction has been completed and when all provisions of the Specifications have been complied with. This estimate will be itemized and will include any deductions provided for in the Specifications; it will also show the amount of the final payment. The Representative will certify this to the Owner, who will pay the Contractor after all terms of the laws of the State of Wyoming governing final payment for public work contracts, have been complied with. The present law is given below for information only. Any amendments or revisions in force at the time of final payment will be complied with.

CHAPTER 78, SESSION LAWS OF WYOMING 1935

Original House Bill No. 202

"SECTION 95-301. Hereafter whenever any public work is let by contract the commission, board or person under whose direction or supervision such work is being carried on and conducted and upon whose approval mean and final estimates are paid for the construction of such work, shall, forty days before such final estimate shall be paid, cause to be published in a newspaper of general circulation, published nearest the point at which such work is being carried on, once a week for three consecutive weeks, and also to post in three conspicuous places on such work, a notice setting forth in substance, that such commission, board, or person has accepted such work as completed according to the plans and specifications and rules set forth in the contract between such commission, board or person and the contractor, and that the contractor is entitled to final settlement therefor; said notice shall also set forth that upon the 41st day (and the notice shall specify the exact date) after the 1st publication of said notice the commission, board or person under whose direction or supervision such work has been carried on will pay to the contractor the full amount due under said contract; and nothing in this section shall be construed as relieving the contractor and the sureties on his bond from any claim or claims for work or labor done or materials or supplies furnished in the execution of the contract."

Final Clean-up

The Contractor shall have removed all rubbish, excess materials, temporary structures, and equipment from the works or from the camps he may have maintained and shall leave the premises in a neat and presentable condition. Final clean-up will be required before final payment will be recommended.

II. INSTRUCTIONS TO BIDDERS

Warning to Bidder

Before filling out the Proposal, a prospective bidder should note carefully the contents of each section given under the heading "Instructions to Bidders," as each is definitely a part of the Specifications and hence remains in force after the contract is awarded.

Bid Bond

To insure the execution of the Contract and Bond for performance of the services, no bid will be considered unless the bidder furnishes a guaranty bond or a certified check in the amount of five (5) percent of the total bid. In case the security is in the form of a certified check it shall be payable to Silver Lake Irrigation District and shall be signed by an official of a solvent bank. Such disposition will be made of it as will accomplish the purpose for which it was submitted. Certified checks will be held uncollected at the bidder's risk. Certified checks of unsuccessful bidders will be returned as soon as practicable after award is made; the certified check of the successful bidder will be returned when the contract is executed. In case the security is a guaranty bond it shall be executed on forms secured from the official issuing the call for bids.

Contract and Performance Bond

The bidder to whom award is made will be required to enter into a written contract and to furnish good and approved surety company bond for the full amount of the contract within fifteen (15) days after he is notified of the acceptance of his proposal. The Contract and bond forms may be examined by the bidder upon request of the official that is to receive the bids. If the bidder to whom award is first made fails to enter into a contract or to furnish bond as herein provided, the award may be annulled and the contract let to another responsible bidder, who will fulfill every stipulation embraced herein as though he were the original party to whom award was made.

Examination of Site and Specifications

Prior to preparing his bid, each bidder is required to have visited the site of the proposed work and to have acquainted himself with the general physical conditions. He is further required to have familiarized himself with the details of the plans and the various other documents that compose the Specifications. As each bidder must determine for himself the various conditions and factors he will have to meet should he be awarded the bid, he is solely responsible and hence cannot hold the Silver Lake Irrigation District or its representatives liable for misinformation, misunderstanding, misinterpretation, or lack of information. The Specifications were prepared to meet the requirements desired by the Silver Lake Irrigation District from data and information secured for that purpose. However, such data or information is not warranted to be absolutely correct or all-inclusive. The bidder is to satisfy himself as to the accuracy or reliability of all statements, and he is to base his bid on his own conclusions. Should operations

under the Contract disclose unforeseen conditions resulting in expense not anticipated when the bid was prepared, no claim may be made against the Silver Lake Irrigation District or its representatives.

Clarification of Specifications

Should a prospective bidder desire clarification of some part of the Specifications or of the Plans that are a part thereof, or should he require an explanation of some seeming inconsistency, error, or omission, he will present to the official that is to receive the bids, a statement of the facts as he interprets them; such statement shall be presented at least forty-eight (48) hours prior to the hour set as the last for submitting bids. At least twenty-four (24) hours prior to the hour set, a reply will be given in writing.

Amendments to Plans and Specifications

Amendments to Plans and Specifications for the purpose of clarification or explanation may be made by the official who is requesting bids, at any time prior to twenty-four (24) hours before the hour set for receiving bids, and all prospective bidders that have requested or obtained copies of the Specifications without said amendments, will be notified. Any amendment will become a permanent part of the Specifications.

Interpretation of Estimated Quantities

Bidders are cautioned that the estimate of quantities attached to the Proposal will serve, as far as this Contract is concerned, only for the purpose of comparing bids. The basis of payment will be actual quantities of work performed and accepted, and if upon completion of the project the actual quantities should show either increase or decrease from the quantities shown in the approximate estimate, the unit price mentioned in the Proposal will still prevail.

Ability of Bidder

Each bidder will submit with his proposal a statement setting forth the experience he has had in the prosecution of work of magnitude comparable to that proposed in these Specifications. Award to a bidder will not be made unless he can show that he has had sufficient experience to do the work proposed and that he has the ability and the necessary resources to do the work within the time specified.

Causes for Rejection

Any alteration in the proposal by the bidder will be sufficient cause for that bid to be rejected. The bidder must have each item upon which he bids carry its own proportion of the cost as nearly as practicable, and if the bid contains an inadequate or unreasonable price for any item the entire bid may be rejected and given no more consideration that if it had not been presented. A bid may be rejected if all the items in the Proposal are

not bid upon or if there is failure to comply with any of the provisions required of bidders.

Rejection of Bids

The Owner reserves the right to reject any bid or all bids should he decide upon such a procedure, and no bidder will have a claim for damages because of such action by the Owner.

Withdrawals

A bidder may withdraw any proposal he has submitted at any time prior to the hour set for the closing of the bids provided the request for withdrawal is signed in a manner identical with the proposal that he is requesting to be withdrawn. No withdrawal or modification will be permitted after the hour designated for closing the bids.

Statement of Work

All the various phases of work enumerated in the specifications with all their individual jobs and overhead, whether specifically enumerated, included by implication, or appurtenant thereto, are to be performed by the contractor under one of the items in the list below, irrespective of whether it is named in the said list. Payment for work performed will be in accordance with the list, subject to changes as provided for under the specifications.

Item No.	Item	Unit	Quantity
1.	Embankment, impervious core, Zone 1	C.Y.	2680
2.	Embankment, Zone 2 of dam	C.Y.	5160
3.	Excavation, Core Trench	C.Y.	1200
4.	Excavation, spillway	C.Y.	2003
5.	Excavation, structural	C.Y.	80
6.	Rock riprap 18" thick	S.Y.	900
7.	Sand and gravel base for riprap 9" thick	C.Y.	210
8.	Concrete	C.Y.	12.5
9.	Reinforcing steel	Pounds	770
10.	Corrugated Metal Pipe 30" diameter 14 ga. double riveted, asphalt dipped, water tight couplings	L.Ft.	114
11.	Revamping and installing old Calco No. 101, 30" diameter steel gate and frame on concrete inlet structure	Lump Sum	Lump Sum
12.	Furnishing and installing gate lifting mechanism consisting of gate stem, pipe housing, stem sleeves, stem couplings, oil retainer and hand wheel lift.	Lump Sum	Lump Sum
13.	Removal of existing rock filled timber dam	Lump Sum	Lump Sum

III. DETAILED SPECIFICATIONS

1. STRIPPING OF DAM SITE AND BORROW PITS

The area to be occupied by the dam, borrow pits and structures shall be cleared of trees, stumps, brush, rubbish, weeds, roots and other combustibles, which shall be piled and burned to complete ash or disposed of in some other satisfactory manner.

The area to be covered by the dam embankment shall be stipped of sod and top soil to a depth sufficient to expose subsoil or rock free of roots and organic matter. Borrow pits shall be stripped in a like manner.

All strippings shall be wasted outside of the area of the dam embankment and reservoir. The strippings shall be dumped in locations designated by the Representative and shall be spread to blend in with the surrounding contour of the ground surface.

The abutments and the banks of any pits or holes occurring in the foundation shall be sloped not steeper than 1:1 to provide bond with the embankment.

2. BORROW PITS

All materials required for the construction of the earth fill of the dam which are not available from the core trench excavation shall be taken from borrow pits numbers 1 and 2 unless otherwise directed by the Representative. Borrow pit number 1 is located about 1000 feet from the dam site while borrow pit number 2 is located 2.7 miles from the dam site on an old wagon road leading to the dam site. This old wagon road can be made into a good haul road with a very little work. The exact location of the borrow pits will be designated by the Representative.

After borrow is made, the pits shall be left in a reasonably smooth and even condition. In order to avoid the formation of pools in the borrow pit, drainage ditches shall be constructed from the borrow pit to the nearest outlet where such drainage ditches are necessary. The Contractor shall visit the site with the Representative and ascertain for himself the location of the borrow pits and the conditions under which the earth material must be obtained and transported.

3. CONSTRUCTION OF CORE TRENCH AND CORE WALL

A core trench of the bottom width and depth shown on the plans shall be excavated in the foundation along the main axis of the dam and shall extend the full length of the dam. The side slopes of the Core trench shall be ½ to 1.

A core wall having a top width of seven feet and side slopes of 5/4 to 1 shall extend the full length of the dam and from the top of the core trench backfill up to a point 2.5 feet below the top of the dam.

The core trench back-fill and core-wall embankment shown on the plans as zone number one, shall be a well blended homogeneous mixture composed of fifty percent of the material from borrow pit number 1 and fifty percent from borrow pit number 2. Mixing of the material from the two borrow pits shall be accomplished as follows: First deposit a horizontal layer approximately two inches in thickness of the material from borrow pit number 1. On top of this first layer place a two inch layer of the material from borrow pit number 2. Blend these two layers together into a homogeneous mixture by means of a suitable disc harrow. The discing shall be sufficient to eliminate all streaks of the separate material and produce a homogeneous mixture. The type of disc harrow used shall be approved by the Representative, who shall also specify the minimum number of passes that shall be made with the disc harrow over each two layers of material after the contractor has made mixing tests with his disc harrow.

After the first two layers are mixed, repeat the operation placing a two inch layer of the material from borrow pit number one and a two inch layer from borrow pit number two on top of the mixed material and then thoroughly mix the two layers as before. The two operations should produce an eight inch layer of mixed material.

Each eight inch layer of mixed material produced shall be compacted by passing a fully loaded sheepsfoot roller over it a minimum of four times. The sheepsfoot roller shall have a minimum weight of 200 pounds per square inch of compaction area of the sheepsfoot projections on the roller.

The fill material shall contain the proper amount of moisture to give the mixed material a high density when compacted. It has been determined by laboratory tests that the optimum water content of a mixture composed of 50% of the material from borrow pit number one and 50% of the material from borrow pit number two is 18 percent. The water content of the mixed material in zone number 1 shall be between 16 percent and 18 percent of the dry weight of the mixture. If the moisture content of the fill material is deficient, the fill material shall be sprinkled with sufficient water to give the proper moisture content.

The core trench back fill shall be carried to the level of the original ground before the placement of the embankment in the dam is started. The material excavated from the core trench may be used in the downstream portion of zone two of the dam if deemed satisfactory by the Representative.

4. EMBANKMENT, ZONE TWO

This embankment includes all the fill material except that in the core trench and core wall, required to produce a dam to the lines and grades shown on the plans plus the additional allowance for settlement of the fill as specified on the plans. The allowance for settlement is specified on the plans as a percentage of the fill heights.

Before any material is placed in the embankment, the site shall be prepared in accordance with the paragraph on "Stripping of Dam Site and Borrow Pits" of these Specifications.

Immediately prior to placement of earth fill material, the surface of the site shall be roughened or corrugated parallel to the centerline of the dam. The corrugations shall be made with a plow or scarifier in such a manner that no smooth or packed surface remains.

The material for the fill in zone two of the dam shall be obtained from borrow pit number 1 except that the material excavated from the core trench may be used in the downstream portion of zone two if deemed satisfactory by the Representative.

Only suitable inorganic material shall be used in the embankment and any material that contains sod, roots, brush or other deleterious matter shall be wasted. No material shall be deposited upon frozen soil and no earth containing frozen lumps shall be deposited in the fill. No rocks having a maximum diameter greater than four inches shall be included in the fill.

The fill material shall be laid in approximately horizontal layers of eight inches in thickness concurrently with the laying of the corresponding eight inch layer of mixed material in the core wall, zone 1. Each lift in both zones shall be made concurrently and each lift shall extend over the full width and length of the dam and shall be kept uniform in thickness and smooth. Each lift in Zone 2 shall be compacted by passing a fully loaded sheepsfoot roller over each layer at least four times. The sheepsfoot roller shall have a minimum weight of 200 pounds per square inch of compaction area of the sheepsfoot projections on the roller.

The moisture content of the fill material shall be sufficient to secure maximum compaction. It has been determined by laboratory test that the optimum water content of the material from borrow pit number 1 is 12.4 percent. The water content of the fill material for zone number 2 shall be between 11.5 percent and 12.4 percent of the dry weight of the material. If the moisture content of the material is deficient, the fill material shall be sprinkled with sufficient water to give the proper moisture content.

The embankment shall be deposited to the grades and lines shown on the plans and established by the Representative. The finished surfaces of the embankment shall be reasonably smooth.

6. ROCK RIPRAP

Riprap shall be placed over the upstream surface of the embankment as shown on the plans. The stone for riprap must be hard and durable. The riprap when completed shall present a generally smooth surface free from

depressions or humps. The riprap is to be eighteen inches thick measured normal to the surface. A layer of well graded sand and gravel 9 inches in thickness measured normal to the surface shall be placed on the earth slope to form a foundation for the riprap. The rock riprap may be dumped in place providing that placement of the rock starts at the toe of the slope and is carried progressively up to the top of the dam. The rock shall be properly graded in size so that voids will not exist which would permit wave action to disintegrate the slope. The rock shall be firmly anchored in place and if flat, thin slab rocks are used, they shall be laid on edge or with the long axis perpendicular to the slope.

6. OUTLET TUBE

The outlet tube through the dam shall be installed in the position indicated on the plans. The pipe shall be laid in a trench excavated in the original ground. The trench shall be of a width sufficient to enable the workmen to properly install the pipe and the side slopes shall not be greater than 1:1. The trench shall first be excavated to a depth of four (4) inches above the grade of the bottom of the pipe. Just prior to placement of the pipe the bottom of the trench shall be brought to grade by carefully shaping the bottom of the trench to fit the pipe. The contractor shall be paid for excavating the trench for the outlet tube and cutoff collars at his unit bid price per cubic yard for structural excavation. The yardage to be paid for shall be the number of cubic yards measured in original position of material acceptably excavated in accordance with the plan or as directed by the Representative. The foundation on which the pipe is to be placed should consist of firm material capable of supporting the outlet tube in a satisfactory manner. Soft or spongy material shall be removed and replaced with selected earth throughly tamped in place. The pipe foundation should be free from projecting stones, stumps, or other obstructions.

The contractor shall construct concrete cutoff collars around the pipe at the locations shown on the plans in order to prevent seepage between the pipe surface and the fill. The cutoff collars shall be the size called for on the plans.

After the outlet pipe has been installed and inspected by the Representative, the trench shall be backfilled in 3-inch layers with each layer thoroughly compacted to a height of one foot above the top of the pipe. If the trench does not extend to the height of one foot above the top of the pipe, the embankment adjacent to the pipe shall be compacted in a like manner to this height. The backfill or embankment adjacent to the cutoff collars shall also be compacted in 3-inch layers to a height of one foot above the top of the cutoff collars. This back fill and embankment adjacent to the pipe and cutoff collars shall be made with fine earth material suitable for compaction in 3-inch layers and each layer shall be thoroughly compacted with hand or mechanical tampers. The layers on each side of the pipe and cutoff collars shall be placed and tamped concurrently so as to prevent displacement of the pipe or cutoff collars by unequal side thrusts.

If the earth used does not contain sufficient moisture for good compaction, water shall be added to the borrow pit or sprinkled on each layer of earth as placed in order to obtain the proper moisture content for the degree of compaction specified.

Compaction shall be carried directly to all concrete and metal surfaces so that there will be no possibility of seepage at the junction of the pipe and cutoff collar surfaces and the earth backfill or embankment. Hand or mechanical compaction shall be carried from the point of contact of the earth with the structure to a minimum height of one (1) foot over the top of the structure and laterally a minimum of three (3) feet from each outside surface or as far as may be required to blend with the body of the fill which is compacted by a sheepsfoot roller.

7. CORRUGATED METAL PIPE

The corrugated metal pipe shall be galvanized pure iron, close-riveted on all seams, asphalt dipped and shall conform to Federal Specifications QQ-C-806. The thickness of metal shall be the gage specified on the plans. The pipe lengths shall be joined together with water-tight metal connections which are held in place by circumferential bands that shall be tightened carefully to prevent leakage. Each joint shall contain an asphalt coated layer of burlap or felt placed between the pipe and the connector. The pipe installation shall be such that the longitudinal laps are at the sides along the spring line, and the inside circumferential laps point downstream.

8. HEADGATE

The contractor will use the thirty inch diameter Hardesty Model No. 101 vertical slide gate now installed on the steel pipe through the old dam. The contractor will revamp the steel frame and gate ring to fit the new concrete inlet structure. If he is unable to revamp the old gate ring, he will furnish a new gate ring suitable for anchoring to the concrete inlet structure. The contractor will install the old metal slide gate on the concrete inlet structure, and furnish and install the gate lifting mechanism consisting of the gate stem, stem sleeves and couplings, oil retainer, pipe housing and hand wheel lift in accordance with the plans. The gate ring shall be set in place at the time the intake structure is poured to provide a water-tight connection. If it is not available at the time the structure is poured, a recess shall be left in the concrete of large enough dimensions to permit grouting in the anchor bolts and gate seat. The contractor will be paid the lump sum bid for revamping and installing old gate and frame. The contractor will also be paid the lump sum bid for furnishing and installing the gate lift mechanism.

9. SPILLWAY EXCAVATION

The contractor shall excavate the cut spillway to the dimensions shown on the plans. The spillway site is located approximately 2250 feet southeast of Station 1 + 21.5 of the new dam. The excavation shall be wasted close to the spillway at the sites designated by the Representative. The contractor will be paid for unclassified spillway excavation at his unit bid price per cubic yard for spillway excavation. The yardage to be paid for shall be the number of cubic yards measured in original position of material acceptably excavated in accordance with the plans or as directed by the Representative.

10. CONCRETE - Composition

Concrete for structures shall be composed of Portland cement, sand, crushed rock or gravel and water mixed in such proportions as to produce a minimum compressive strength of 3000 pounds per square inch at the end of 28 days.

The proportioning of cement, sand, crushed rock or gravel and water shall be such as to produce a workable concrete mixture, neither too sandy nor too harsh, with no more water in the mixture than is necessary to create the required degree of plasticity for proper handling without segregation of the aggregates. Including the free water in the aggregates, the quantity of water used shall not exceed six (6.0) gallons per sack of cement.

The exact proportions of the cement, sand and gravel or crushed rock in the concrete mixture will depend on the nature of the aggregates that are used. Generally a concrete of the required strength conforming to the above limitations is secured when mixed in the following proportions: 1 part of cement to 2½ parts of sand and 3½ parts of gravel or crushed rock. The above proportions are by weight. If the aggregates used do not give the required workability when combined in the above proportions, the proportions shall be modified to produce workable concrete of the desired slump without exceeding a water-cement ratio of six gallons of water per sack of cement. The slump at point of placement will be within the limits of four and one-half (4½) to six (6) inches, depending on the nature of the work done.

The Representative shall approve the proportioning of the concrete mixture before any concrete is placed, and, if necessary, shall alter the proportioning during any run of concrete in order to obtain workable concrete of the required strength.

Reinforcing steel, cement and aggregates shall be stored at the site in such a manner as to prevent deterioration or intrusion of foreign matter. Any material that has deteriorated sufficient to weaken the strength of the concrete shall not be used for concrete.

11. PORTLAND CEMENT

In general, the cement used in concrete shall be Portland cement meeting government specifications for the same. (Designation C-33)

If alkali is present in the soil adjacent to the structure in sufficient quantity to be harmful to the concrete, the cement used shall be sulphate-resisting Portland cement meeting A.S.T.M. specifications.

12. AGGREGATES

a. General

Concrete aggregates shall conform to the tentative specifications for concrete aggregates (A.S.T.M. Serial Designation C33-37T). Where aggregates conforming to these specifications are not obtainable, aggregates that have been shown by tests or by actual service to produce concrete of the required strength, durability, watertightness, and wearing qualities, may be used if authorized by the Representative. Aggregates approved for use by state highway departments are satisfactory.

b. Fine Aggregate

The sand particles shall be clean, hard dense, durable, uncoated, non-organic rock fragments that will pass a screen having ¼ inch square or equivalent round openings. It shall be free from injurious amounts of dust, lumps, soft or flaky particles, shale, alkali, organic matter, loam, and other deleterious substances. The sand shall be well graded from coarse to fine and when tested by means of standard laboratory sieves, shall fall within the following limits of gradation:

	Cumulative Percent by Weight
Retained on a No. 4 sieve	0 to 5
Retained on a No. 14 sieve	20 to 50
Retainedon a No. 48 sieve	80 to 90
Retained on a No. 100 sieve	95 to 100

When subjected to the "Standard Method of Test for Organic Impurities in Sand for Concrete," A.S.T.M. Designation C 40-33, the fine aggregate shall not show a color darker than the standard color.

c. Coarse Aggregate

Coarse aggregate shall consist of crushed rock or gravel composed of clean, hard, dense, durable, uncoated fragments free from injurious amounts of soft, friable, thin, elongated, or laminated pieces, alkali, organic or other deleterious matter. Ninety-five (95) percent of the coarse aggregate shall be retained on a screen having a ¼ inch square mesh or equivalent round mesh. Coarse aggregate shall be well graded from coarse to fine and when tested by means of laboratory sieves, shall conform to the following requirements:

	Percent
Passing a No. 4 sieve	0 to 5
Passing a 3/8-inch sieve	10 to 30
Passing a 3/4-inch sieve	35 to 70
Passing a 1½-inch sieve	95 to 100

d. Pit Run Sand and Gravel

Pit run sand and gravel may be used if it has a proper gradation, is clean and meets the other requirements for producing good concrete. To produce good workable concrete, a minimum of 37 percent of the pit run sand and gravel should be sand passing through a No. 4 sieve. If the sand in the mixture is less than 37 percent, additional sand should be added to the pit run sand and gravel to give the minimum required amount. This additional sand can undoubtedly be obtained by screening it out of the pit run material not intended for use as concrete aggregate. The proportion of cement to pit run aggregate will vary with the gradation of the aggregate. It is anticipated that a workable mix of the required strength will be obtained when mixed in the proportion of one part of cement to 4 parts of pit run aggregate. These proportions are by weight. If the pit run aggregate used does not give the required workability when used in these proportions, the proportion of pit run aggregate shall be modified to produce workable concrete of the desired slump without exceeding the water-cement ratio of six gallons of water per sack of cement.

13. WATER

The water used in mixing shall be reasonably clean and free from objectionable quantities of silt, organic matter, alkali, salts, or other impurities.

14. MIXING

The cement, sand, crushed rock or gravel shall be mixed in a concrete mixer of approved type and size until there is a uniform distribution of the materials throughout the mass. The concrete mixer shall be rotated at the speed recommended by the manufacturer, and mixing shall be continued for at least one minute after all materials are in the mixer. Each mixer shall be completely discharged before being recharged. Overloading of the mixer shall not be permitted. Only sufficient water shall be added in mixing to produce a workable mix.

Before mixing is started, all equipment used for mixing and transportation of concrete shall be thoroughly cleaned.

15. TEMPERATURE OF CONCRETE

Concrete when deposited in the forms shall have a temperature of not more than 90°F., and not less than 40°F. In freezing weather the minimum temperature is 50°F.

16. FORMS

Forms to confine the concrete shall conform to the shape, lines and dimensions of the member as called for on the plans. The forms shall be of sufficient strength to hold the concrete and to withstand the necessary pressure, ramming and vibration without deflection from the prescribed line.

The surface of all forms in contact with the concrete shall be rigid, tight, and smooth. Wooden forms to be used more than once shall be maintained in serviceable condition and thoroughly cleaned before re-use.

Before placing concrete, the surface of all forms shall be oiled with suitable non-staining oil, and all debris shall be removed from the spaces to be occupied by the concrete.

Forms shall be removed in such a manner as to insure the complete safety of the structure. In no case shall the forms be removed until the members have acquired sufficient strength to support safely and without distortion their weight and the load superimposed upon them.

17. PLACING

Concrete shall be placed in the work before it has stiffened sufficiently to require retempering. If any concrete before placement has become so stiff that proper placement cannot be assured, the concrete shall be wasted. All concrete surfaces which have set for 12 hours or more upon or against which concrete is to be placed and to which new concrete is to adhere, shall be cleaned of all laitance and loose or defective surface concrete and the surface of the set concrete treated in accordance with the specifications outlined under the paragraph "Construction Joints."

When the placing of concrete is to be interrupted long enough for the concrete to take its final set, beveled 2-inch by 4-inch lumber shall be placed in the working face of the concrete with the 4-inch side at the surface and parallel to the working face so as to provide a shear joint between the two pours.

Only methods of transporting and placing which will deliver concrete of the required consistency into the work, without segregation and without objectionable porosity, shall be used. Concrete shall be deposited in all cases as nearly as practicable directly into its final position and shall not be caused to flow in the mass in a manner to permit or cause segregation. No concrete shall be placed in water except with written permission, and the method of depositing the concrete shall be subject to approval. No concrete shall be placed in running water.

No concrete that has been contaminated by foreign material shall be deposited on the work, nor shall retempered concrete be used.

When pouring of concrete is once started it shall be carried on as a continuous operation until the placing of the panel or section is completed. The top surface shall generally be leveled. When construction joints are necessary they shall be made in accordance with instructions given in these specifications.

All concrete shall be compacted by suitable means during the operation of placing and shall be thoroughly worked around reinforcements, imbedded fixtures, and into the corners of the forms. Where conditions make compacting difficult or where reinforcement is congested, mortar containing the same proportion of sand to cement as used in the concrete shall be deposited in the forms in such places. Concreting shall be carried on at such a rate that the concrete is at all times plastic and flows readily into the spaces between the bars.

The surface of concrete shall be smooth and free from projections, honey-combing, and other objectionable defects. Immediately upon removal of forms all unsightly ridges or lips shall be removed, and any undesirable local bulge or exposed surface shall be remedied by tooling and rubbing to the satisfaction of the Representative.

When concrete is to be placed during freezing weather the necessary precautions shall be taken to prevent it from freezing for a period corresponding to the moist curing period. When necessary, concrete materials shall be heated before mixing. The temperature of the mix shall never be greater than 100°F. The methods of heating the materials and protecting the concrete shall be approved by the Representative. Salt, chemicals, or other foreign material shall not be mixed with the concrete for the purpose of preventing freezing or for any other reason. Before concreting is started all ice, snow and frost should be removed from the interior of forms and from reinforcing steel and embedded parts. Concrete shall not be placed on a frozen sub-grade.

18. CONSTRUCTION JOINTS

Joints not indicated on the plans shall be made and located so as not to impair the strength of the structure. When a joint is to be made the surface of the

concrete shall be thoroughly cleaned and all laitance removed. Immediately before placing of the new concrete the contact surface previously placed shall be thoroughly wetted and all surplus water shall be removed from depressions. After cleaning and wetting, all horizontal concrete surfaces shall be covered with a layer of mortar three-quarters (3/4) of an inch thick consisting of the regular concrete mixture without the coarse aggregate. The regular concrete mix shall be placed immediately thereafter.

19. FINISHING

The surface of concrete finished against forms shall be smooth, free from projections and thoroughly filled with mortar. Immediately on removal of forms, all holes left by removal of rods and all voids shall be neatly filled with cement mortar of the same proportions as the mortar in the concrete. All unsightly ridges or lips shall be removed.

20. CURING AND PROJECTION

Exposed surfaces of concrete shall be protected from the direct rays of the sun for at least three (3) days. All concrete shall be kept continuously moist for at least one week after the concrete has been placed. The method of keeping concrete moist shall be by sprinkling or spraying with water, or by other suitable and approved means. In freezing weather, suitable means shall be provided for maintaining the concrete at a temperature of a least 50° F. after placing, until the concrete has thoroughly hardened, but for not less than 72 hours. It shall be kept from freezing for a period of not less than 1 week.

21. REINFORCEMENT BARS

Metal reinforcement shall conform to the requirements of the "Standard Specifications for Billet-Steel Concrete Reinforcement Bars" of Intermediate Grade, A.S.T.M. Serial Designation A16-30, or for "Rail-Steel Concrete Reinforcement Bars" (A.S.T.M. Serial Designation: A16-35). The provision in these Specifications for machining deformed bars before testing shall be eliminated. Metal reinforcement, before being placed, shall be free from rust scale or other coatings that will destroy or reduce the bond. Reinforcement shall be formed to the dimensions indicated on the plans. Cold bends shall be made around a pin having a diameter of four (4) or more times the least dimensions of the bar. Metal reinforcement shall not be bent or straightened in a manner that will injure the material. Bars with kinks or bends not shown on the plans shall not be used. Heating of reinforcement for bending will not be permitted.

Steel bars shall be placed in the concrete wherever shown on the drawings or otherwise prescribed. The steel used for concrete reinforcement shall be so secure in position that it will not be displaced during the depositing of the concrete, and special care shall be exercised to prevent any disturbance of steel in concrete that has already been placed. In slabs and beams, splices of reinforcement shall not be made at points of maximum stress without the approval of the Representative. Splices, where permitted, shall provide sufficient lap to transfer the stress between bars by bond and shear, which is a minimum of 40 diameters.

22. STRUCTURAL EXCAVATION FOR INLET AND OUTLET STRUCTURES

All excavation shall be made in accordance with the lines and elevations shown on the plans and established by the Representative. Special care shall be taken not to disturb the bottom of the excavation after excavation to final grade has been made. Wasted excavation shall be disposed of as directed by the Representative.

The Contractor may make the width and length of excavation for the inlet and outlet structures any reasonable distance to enable him to proceed with his construction plan. However, the yardage to be paid for shall be the number of cubic yards, measured in original position, of material acceptably excavated in conformity with the plans or as directed by the Representative, but in no case shall any yardage be included in the measurement for payment which is outside of a volume bounded by vertical planes 12 inches outside and parallel to the neat lines of the footings.

Structural excavation shall also include the trench excavation for the outlet tube and cutoff collars made in accordance with the plans and as directed by the Representative.

23. BACKFILLING AROUND INLET AND OUTLET STRUCTURES

All spaces excavated and not occupied by the structure shall be backfilled with earth up to the surface of the surrounding ground, with a sufficient allowance for settlement as determined by the Representative. All material used for backfill shall be of a quality acceptable to the Representative and shall be free from large or frozen lumps, wood, or other extraneous material. All backfill shall be thoroughly compacted and, in general, its top surface shall be neatly graded. No backfill shall be placed against concrete structures until permission shall have been given by the Representative and preferably not until the concrete has been in place 28 days or until the concrete has developed a strength of 3000 pounds per square inch.

24. EMBANKMENT AROUND INLET AND OUTLET STRUCTURE

This item includes all the fill material around the inlet and outlet structures above the backfill placed in accordance with the plans or as directed by the Representative. Only suitable inorganic material shall be used in this embankment. No material containing sod, roots, brush or other deleterious matter shall be placed in the embankment. The fill shall be thoroughly compacted and its top surface shall be neatly graded. The Contractor shall be paid for this embankment measured in place at the unit bid price per cubic yard for embankment zone 2. The material for this embankment shall be obtained from a borrow pit number one.

This proposal covers construction of a dam for the Silver Lake Irrigation District, Boulder, Wyoming, and includes the furnishing of labor, materials and equipment required to build the dam complete in accordance with the plans and specifications.

In accordance with the Notice to Contractors given by the Silver Lake Irrigation District of Boulder, Wyoming, date _____,19___, and subject to all conditions thereof, the undersigned offers and agrees, should the bid be accepted, to furnish all labor and materials and to perform the work for said Owner at the prices shown on the following Bid Schedule:

The Bid Schedule below lists the various divisions of construction contemplated in these specifications, together with an estimate of the units of each. With these units as the basis, the Bidder will extend each item, using the cost he inserts in the unit column. Any total cost found inconsistent with the unit cost when bids are examined will be deemed in error and corrected to agree with the unit cost which shall be considered correct. It is expressly understood that all the various phases of work enumerated in the plans and specifications, with all their individual jobs and overhead, whether specifically enumerated, included by implication or appurtenant thereto are to be performed by the Contractor under one of the items listed below, irrespective of whether it is named in said list.

Item No.	Item	Unit	Quantity	Unit Cost	Total
1.	Embankment, impervious core, zone 1	C.Y.	2660		
2.	Embankment, Zone 2 of dam	C.Y.	3160		
3.	Excavation Core Trench	C.Y.	1200		
4.	Excavation, spillway	C.Y.	2005		
5.	Structural Excavation	C.Y.	50		
6.	Rock riprap 18" thick	S.Y.	960		
7.	Sand and gravel base for riprap 9" thick	C.Y.	210		
8.	Concrete	C.Y.	12.5		
9.	Reinforcing Steel	Pounds	770		
10.	Corrugated Metal Pipe 50" diam. 14 ga. double riveted, asphalt dipped, water tight couplings	L.Ft.	114		
11.	Revamping and installing old Calco No. 101, 30" diam. steel gate and frame on concrete inlet structure	Lump Sum	Lump Sum		
12.	Furnishing and installing gate lifting mechanism consisting of gate stem, pipe housing, stem sleeves, stem couplings, oil retainer and hand wheel lift	Lump Sum	Lump Sum		
13.	Removal of existing rock filled timber dam	Lump Sum	Lump Sum		
	GRAND TOTAL				$

The undersigned represents that he has examined the area and ground of the proposed work and is throughly familiar with the conditions under which the work is to be done, and he agrees that this bid is made subject to the Instructions to Bidders, General Conditions, Specifications, Schedules and Drawings referred to in the Notice to Contractor, and which have been furnished to him by the Owner, and that the same are made a part thereof.

The undersigned agrees, in case this bid is accepted, to execute a written contract and to furnish a performance bond, as provided in the Specifications. He further agrees to initiate work under the Contract within _____ days after the Contract is signed and to complete the same within _____ days thereafter, unless an extension of time is granted as provided in the Specifications. The undersigned presents with this bid a certified check, draft or bid bond, in the sum of $_____.

Dated this _____ day of _____, 195_.

_____

_____

SPECIFICATIONS FOR CONSTRUCTION OF SILVER LAKE DAM, BOULDER, WYOMING

I. General Condition

1. Location and General Description:

The Silver Lake Irrigation District, Boulder, Wyoming, requires the construction of an earth dam containing a corrugated metal outlet pipe with an inclined metal slide gate and the excavation of a spillway in accordance with these specifications and with the attached plans that are a part of these specifications. The dam is located on Silver Creek in unsurveyed territory about seventeen miles east of the town of Boulder, Wyoming. It is in the Bridger National Forest and within the Bridger Wilderness Area on land owned by the Federal Government and administered by the United States Forest Service. Station 1 + 21.5 on the centerline of the dam is located North 10° 07' West 5036 feet from the northwest corner of the northeast quarter of Section 3, Township 32 North, Range 105 West. The dam is to be constructed in approximately the same location as an existing old rock filled timber dam, which is to be removed and material disposed of in a manner satisfactory to the Forest Supervisor or his representative. The project site is located at an altitude of approximately 9,930 feet. Construction of the dam will begin about August 1, 1951, and will be completed by October 15, 1951. Work in winter in this high altitude is impossible due to snow and freezing temperatures. Spring floods and the need of the water for irrigation make it inadvisable to start work until the above-mentioned date. The regulations of the Forest Service must be complied with for the work proposed is within the Bridger Wilderness Area of the Bridger National Forest. The Forest Service recognizes easements, rights-of-way and special use permits that have been established by the Silver Lake Irrigation District that own the reservoirs and have been granted permits to cover construction enumerated in the specifications. The contractor will be subject to the following special conditions required by the U. S. Forest Service.

a. Disposal of Existing Dam. Logs and inflammable material will be piled and burned at a place or places on or adjacent to the dam site designated by the forest officer in charge. Rock and fill material not used in the construction of the new dam will be dumped in the reservoir, or scattered to conform with the natural surroundings at the dam site. Headgate and other metal material remaining from the old dam and not used will be hauled from the forest for disposal.

b. Roads. A minimum of road construction will be allowed within the Wilderness Area. This shall consist of blasting boulders to allow clearance for construction vehicles and placing corduroy in soft spots. All work on roads requires the approval of the forest officer in charge. The terrain is level or gently rolling and ground conditions are firm so that travel by wheeled vehicles is possible over most of the area. Vehicles will be confined to one set of wheel tracks between points of travel. Specifically, from the Wilderness Area boundary to camp, from the borrow pit to the dam site, and from camp to the dam site. Required road construction to allow transportation of equipment and supplies, will be permitted from the Forest Boundary to the Wilderness Area Boundary.

c. Camp. The location for the construction camp has been designated at the old cow camp cabin in the southwest quarter of Section 5, Township 33 North, Range 105 West. This camp will be of temporary nature, consisting of tent frames and tents and will be laid out according to plans of the Forest Officer in charge. No trailer houses or temporary buildings of lumber construction will be permitted. The cutting or defacing of green timber or the marring of the general landscape feature is prohibited. The campsite will be cleaned to its original condition at the termination of use. No camping by construction personnel will be permitted at Silver Lake.

d. Borrow Pit. Material for the dam fill will be taken from the two designated pits. One is located at the dam site and the second at Whiskey Creek. The top soil from the dam site pit will be scraped and stockpiled before borrowing is commenced. After completion of the dam, the pit will be smoothed to conform with the general contour of the adjacent area, top soil replaced, then revegetated. The mixture of grass seed and the method of seeding shall be approved by the Forest Officer in charge. The Whiskey Creek pit shall be prepared and disposed of in a similar manner, excepting that the creek may be channeled into the pit, forming a lake and only that portion above water line needs to be treated and revegetated.

e. Treatment of Roads, Road Treads, Ditches, Spillway Cuts and Other Land Scars. After work is completed, all scars, road treads and otherwise, resulting from dam construction, travel and camp use, will be reseeded as specified above. All corduroy placed in roads constructed for this project shall be removed or treated in a manner satisfactory to the Forest Officer in charge.

f. Wilderness Area Provisions. Because the camp, dam and a portion of the road are within the Bridger Wilderness Area, the following provisions shall be strictly enforced.

Only construction vehicles will be allowed within the Wilderness Area. No private vehicles not used for construction will be allowed to enter the Wilderness Area. This includes cars owned by workmen on the project. If private vehicles are taken into the forest, these shall be parked at the Wilderness Area Boundary. The contractor will make provision for the required road blocks to accomplish this objective. Construction or transportation vehicles shall not be used to transport personnel from camp to Silver Lake or other parts of the wilderness area for the purpose of hunting or fishing, or for any reason other than the construction of the Silver Lake dam project. The padlock on the gate at the Gladwen Jensen ranch below the forest boundary will be kept locked to prevent the general public from using the road constructed for traffic essential to the project. The camp will not be used to provide facilities for recreationists visiting the area.

Definition of terms. Under the terms of the contract the party of the first part is the Silver Lake Irrigation District and the party of the Second Part is the person, firm, or corporation to whom award is made.

For purposes of clarification, it should be understood that the Silver Lake Irrigation District has entered into an agreement with the Soil Conservation Service of the United States Department of Agriculture, said

agreement being no part of these specifications, for engineering and other technical assistance in the design and construction proposed herein. The Silver Lake Irrigation District is also subject to the regulations of the Forest Service, United States Department of Agriculture, and has obtained a permit for the construction proposed herein. The Silver Lake Irrigation District has appointed the Soil Conservation Service its sole designated agent with full authority to interpret specifications, to supervise construction, and to prosecute the work in accordance with these specifications, subject to Forest Service approval. The party of the second part in signing the contract recognizes and accepts these relationships.

The word "Representative" will refer to the official whom the Soil Conservation Service designates as its field representative, and that official will be the designated agent of the Silver Lake Irrigation District, in accordance with the explanation given above. The Forest Officer in charge will refer to the District Forest Ranger located at Pinedale, Wyoming.

The word "Owner" will mean the Silver Lake Irrigation District, Sublette County, Wyoming, for whom the work is to be performed. The owner will be responsible for payment in accordance with the terms of the contract.

The word "Contractor" as hereinafter used will designate the party of the second part. Subcontractors as such will not be recognized.

Contractor to be present or represented. The Contractor at all times shall be present upon the work or shall have a responsible agent or foreman who will, in writing, have full authority to act for the contractor and to carry out instructions given him by the Representative. The foreman shall be qualified to handle all phases of the work covered herein and shall be able to read plans and to interpret specifications. At no cost to the contractor a reasonable number of copies of the Plans and Specifications will be supplied him for use during construction operations. It will be the responsibility of the contractor to see that all his personnel give their fullest cooperation to the Representative even though all dealings of the Representative, except in emergencies, will be with the Contractor or his foreman.

Scope of work covered by specifications. Unless specifically excepted in the specifications, the contractor will furnish all materials, implements, machinery, equipment, tools, supplies, transportation and labor necessary to do all the work enumerated or provided for under the terms and stipulations of the specifications, the proposal, and the contract.

Plans and working designs. The approved plans will be supplemented by such work drawings as are necessary to adequately control the work. It is mutually agreed that all authorized alterations affecting the requirements and the information given on the approved plans will be in writing and approved by the representative and the Forest Officer in charge. When at any time reference is made to the Plans the interpretation shall be the plans as affected by all authorized alterations then in effect.

Responsibility of damages. The Contractor assumes entire responsibility for the safety of his employees and of his plant, materials, and supplies and for any damage or injuries done by said employees or done to any of them from any source or cause. He shall save harmless the owner and his representative and employees from all suits, actions, or claims resulting from said injuries or damage or from any act or omission of the Contractor, his employees, or his agents in the execution of the work. Said responsibility shall continue until all construction will have been completed and accepted. The owner upon the recommendation of the representative may withhold any money due under the contract in an amount he may consider necessary to cover claims for damages or costs of suits until such are settled or disposed of and satisfactory evidence to that effect furnished him.

Damage to construction. The Contractor shall safeguard, until all work under contract is formally accepted, all construction both complete and incomplete, against damage and destruction, and should damage result he will be required to repair it at his expense in a manner conforming to these specifications. In the absence of definite instructions in the specifications, reconstruction shall be done in a manner suitable to the representative. It is understood the Contractor would not be expected to pay for damages done to any work undertaken by the owner unless through carelessness of the Contractor such work was damaged.

Patent infringements. The Contractor shall hold and save the owner harmless from all demands, or liabilities for alleged use or manufacture of any patented or unpatented invention, idea, or process on work or on articles herein contracted.

Authority of representative. The representative will decide all questions that arise relative to the interpretation of the specifications and the contract. The Forest Officer in charge will decide all questions relative to the special use permit and regulations of the U. S. Forest Service. They will impartially see that each party to the contract complies with his part of the specifications and regulations.

Representative to be referee. The representative will pass upon the quality and acceptability of the workmanship and of the materials and supplies used under the contract. It will be his duty to enforce the specifications in a fair and unbiased manner, although he has the right to waive any term that may be found unreasonable and out of line with the general spirit of the specifications. If a variation from any requirement is allowed, the representative will grant same in writing with the reasons for his action outlined, but the contract will in no manner be vitiated by such action. The representative will obtain approvals and acceptance of workmanship from the Forest Officer in charge and will not approve any specifications or workmanship not acceptable to the Forest Service.

Acceptance or Rejection of Materials or of Work. The Representative will inspect all materials, manufactured articles, supplies, equipment, and construction, and he will accept items found satisfactory and reject those found unsatisfactory. He will have the right, should he reject any item or condemn any construction, to stipulate when the item is to be removed from the plant or the site of construction, and he will have the right to designate how quickly the construction he has condemned will have to be removed or corrected. The Owner will not pay for material or workmanship not acceptable to the Representative. If the Contractor fails to comply with the orders of the Representative with regard to removal of material or correction of unsatisfactory work, the Representative may have the material removed or

Objectionable Employees. The Contractor will be required to discharge any employee and see that he leaves the vicinity promptly if the Representative makes a request of this nature in writing and states that the individual is incompetent or is objectionable for some other reason.

Laws and Regulations. The Contractor shall familiarize himself with all laws and regulations of Federal, State, and local authorities that might in any manner affect the conduct of his work, so that he and those working for him may comply strictly with such laws and regulations. He shall save harmless the Owner and his representative and employees from any claim arising from alleged violation or actual violation of any such law, by-law, ordinance, or regulation. In accordance with such regulations he shall protect his employees with adequate compensation insurance and shall meet all other laws and regulations dealing specifically with labor.

Sanitary provisions. Satisfactory latrines and garbage pits will be installed at points designated by the Forest Officer in charge and maintained by the contractor at the site of the construction work, and the contractor and his employees will observe and recognize sanitary regulations there. The contractor shall install and maintain latrines in accordance with the regulations of the State Department of Public Health and Forest Service at his plant and the construction camp.

Lines and Grades. Responsibility for setting stakes and for giving lines and grades rests with the representative. The contractor should give him ample notice when surveys will be needed so that stakes can be promptly set without causing costly delays or troublesome inconvenience to anyone. Preservation of survey stakes and marks is the responsibility of the contractors. If such stakes are destroyed before having fulfilled their purpose, the contractor may be charged for the expense of replacement.

Errors, omissions, and inconsistencies. Neither the owner nor the contractor will be allowed to take advantage of an error, omission or inconsistency. Errors, omissions, or inconsistencies discovered by any bidder prior to the opening of the bid will be clarified in accordance with the paragraph "Clarification of Specifications."

Initiation, Prosecution and Completion. The contractor, if weather conditions permit, shall begin construction work on or before August 1, 1951. Each bidder will state in his proposal the number of consecutive calendar days that he would require after the contract is signed to complete the construction, but no proposal will be considered where a period of more than 90 days is required. The owner reserves the right to give preference to a bidder who has offered to complete the work in the shortest time and who, by reputation, has the ability to live up to the time offered in his proposal and has the equipment and resources to accomplish the work within said period. If the contractor fails to complete the work within the time specified, including any authorized extensions of time, the owner may deduct from any sums due the contractor $_____ for each day beyond the total authorized time. This $_____ per day charge will be collected as liquidated damages incurred by the owner as a result of the delay and not as a penalty against the contractor for failure to meet the terms of the specifications.

Sufficiency of Time. The period allowed for construction and completion of the proposed work, unless extraordinary and unforeseen difficulties arise, is sufficient if a properly equipped and ably managed firm takes advantage of each good working day. Should extraordinary and unforeseen difficulties arise that in the opinion of the Contractor justify an extension of time, he shall in writing apply to the representative for an extension, and the representative shall in writing grant the extension required, or a portion of it, or reject the request.

Should the representative at any time decide that work is not progressing at the rate specified elsewhere in these specifications, he shall notify the Contractor in writing and give him a specified number of days in which to correct the condition. A copy of the notification to the contractor shall be sent to the owner.

At the expiration of the stipulated period if the contractor has not corrected the condition, a representative of the owner and a representative of the contractor will meet with the representative to form a board to decide what steps should be taken to correct the situation. This board may decide what additional labor and equipment should be hired, or under extreme conditions the full charge of operations should be withdrawn from the Contractor and placed in the hands of the representative for a definite prescribed period or until the construction is completed. Under such circumstances the representative has the right to take over the Contractor's entire plant and a crew or any portion of either.

Any cost to the owner in excess of the cost computed by contract rates, as a result of the action of the board, shall be deducted from any sums due or to become due the Contractor. Failure of the representative to notify the Contractor promptly, should progress fall behind schedule, shall not be construed to affect the right of the representative to later take action.

Delays and Extensions. The Contractor will not be entitled to any claim for damages for any hindrance or delay in the progress of the work for any cause whatever, but such hindrance or delay may entitle him to an extension of time sufficient to compensate for same, provided the Contractor will immediately in writing notify the representative, who will study the facts outlined by the Contractor, then decide what extension, if any, is justified.

Extra Work. Extra work will be work for which no unit bid was received in the proposal and will not be construed to mean work for which unit bids were received but that is in excess of the quantity mentioned in the proposal. Extra work shall be done only upon a written order of the representative, and no claim for extra work shall be presented unless supported by a written order of the representative.

At the option of the representative the price of extra work may be agreed upon in advance either as a unit price or a lump sum, or the price may be on the basis of actual cost to the Contractor for labor, materials, and equipment usage, plus fifteen per cent (15%) to cover all supervision and all overhead charges.

Minor Modifications: Both parties to the Contract agree to give to the representative the right to alter the work as shown on the drawings or described in the specifications at any time such alterations are considered necessary or desirable, provided such alterations are consistent with the general improvement work described in the plans and specifications when the contract was awarded.

All changes will be made a matter of written record by the representative and approval will be secured from the Forest Service before the work is done. The value of work brought about by any change, including additions and excluding omissions, will be determined by the unit price bid for such work, or in the case of extra work, in accordance with the stipulations in the paragraph on Extra Work.

Measurement of Quantities. Computation of quantities that will be the basis for estimates both monthly and final, shall be in accordance with standard practices, and no local rules or customs will be considered. In computing volume the average end-area method shall be employed, all distances being measured along centerline of the fill. In computing volume of embankment, the lines and grades shown on the drawings will be the dimensions that govern. Such computed volume will not include material allowed for shrinkage; neither will it include unauthorized material deposited outside the limits of said lines.

Partial Payments. Between the twenty-fifth (25th) of each month and the end of the month, the representative will prepare an itemized cost estimate of the total work completed to that period. He will allow for all materials and supplies that have been incorporated into the work but not for materials and supplies not incorporated. The total cost estimate shall include expense allowed for extra work.

On all such estimates except the one for final payment, the representative shall first deduct ten (10) percent, then shall deduct all sums paid on previous estimates. The resultant figure is the amount due the Contractor on the estimate.

On the last workday in the month the representative will submit the monthly estimate to the owner, who will take whatever action is necessary to have a check prepared and delivered to the Contractor before the fifteenth (15th) day of the ensuing month in the full amount due him.

Any errors or omissions in a monthly estimate will be subject to correction in the next estimate.

Acceptance and Final Payment. The representative will prepare the final estimate when construction has been completed and when all provisions of the specifications have been complied with. This estimate will be itemized and will include any deductions provided for in the specifications; it will also show the amount of the final payment. The representative will certify this to the owner, who will pay the Contractor after all terms of the laws of the State of Wyoming governing final payment for public work contracts, have been complied with. The present law is given below for information only. Any amendments or revisions in force at the time of final payment will be complied with.

CHAPTER 78, SESSION LAWS OF WYOMING 1935
Original House Bill No. 202

"SECTION 95-301. Hereafter whenever any public work is let by contract the commission, board or person under whose direction or supervision such work is being carried on and conducted and upon whose approval mean and final estimates are paid for the construction of such work, shall, forty days before such final estimate shall be paid, cause to be published in a newspaper of general circulation, published nearest the point at which such work is being carried on, once a week for three consecutive weeks, and also to post in three conspicuous places on such work, a notice setting forth in substance, that such commission, board, or person has accepted such work as completed according to the plans and specifications and rules set forth in the contract between such commission, board or person and the contractor, and that the contractor is entitled to final settlement therefor; said notice shall also set forth that upon the 41st day (and the notice shall specify the exact date) after the 1st publication of said notice the commission, board or person under whose direction or supervision such work has been carried on will pay to the contractor the full amount due under said contract; and nothing in this section shall be construed as relieving the contractor and the sureties on his bond from any claim or claims for work or labor done or materials or supplies furnished in the execution of the contract."

Final Clean-up: The Contractor shall have removed all rubbish, excess materials, temporary facilities, and equipment from the work or from the camp he maintains and shall leave the premises in a neat and presentable condition acceptable to the Forest Officer in charge. Final cleanup will be required before final payment will be recommended.

II. Instructions to Bidders.

Warning to Bidder. Before filling out the proposal, a prospective bidder should note carefully the contents of each section given under the heading "Instructions to Bidders," as each is definitely a part of the specifications and hence remains in force after the contract is awarded.

Bid Bond. To insure the execution of the Contract and Bond for performance of the services, no bid will be considered unless the bidder furnishes a warranty bond or a certified check in the amount of five percent of the total bid. In case the security is in the form of a certified check it shall be payable to Silver Lake Irrigation District and shall be signed by an official of a solvent bank. Such disposition will be made of it as will accomplish the purpose for which it was submitted. Certified checks will be held uncollected at the bidder's risk. Certified checks of unsuccessful bidders will be returned as soon as practicable after award is made; the certified check of the successful bidder will be returned when the contract is executed. In case the security is a guaranty bond it shall be executed on forms secured from the official issuing the call for bids.

Contract and Performance Bond. The bidder to whom award is made will be required to enter into a written contract and to furnish good and

approved surety company bond for the full amount of the contract within fifteen (15) days after he is notified of the acceptance of his proposal. The contract and bond forms may be examined by the bidder upon request of the official that is to receive the bids. If the bidder to whom award is first made fails to enter into a contract or to furnish bond as herein provided, the award may be annulled and the contract let to another responsible bidder, who will fulfill every stipulation embraced herein as though he were the original party to whom award was made.

Examination of Site and Specifications. Prior to preparing his bid, each bidder is required to have visited the site of the proposed work and to have acquainted himself with the general physical conditions. He is further required to have familiarized himself with the details of the plans and the various other documents that compose the specifications. As each bidder must determine for himself the various conditions and factors he will have to meet should he be awarded the bid, he is solely responsible and hence cannot hold the Silver Lake Irrigation District or its representatives liable for misinformation, misunderstanding, misinterpretation, or lack of information. The specifications were prepared to meet the requirements desired by the Silver Lake Irrigation District from data and information secured for that purpose. However, such data or information is not warranted to be absolutely correct or all-inclusive. The bidder is to satisfy himself as to the accuracy or reliability of all statements, and he is to base his bid on his own conclusions. Should operations under the contract disclose unforeseen conditions resulting in expense not anticipated when the bid was prepared, no claim may be made against the Silver Lake Irrigation District or its representative.

Clarification of Specifications. Should a prospective bidder desire clarification of some part of the specifications or of the plans that are a part thereof, or should he require an explanation of some seeming inconsistency, error, or omission, he will present to the official that is to receive the bids, a statement of the facts as he interprets them; such statement shall be presented at least forty-eight (48) hours prior to the hour set as the last for submitting bids. At least twenty-four (24) hours prior to the hour set, a reply will be given in writing.

Amendments to Plans and Specifications. Amendments to plans and specifications for the purpose of clarification or explanation may be made by the official who is requesting bids, at any time prior to twenty-four (24) hours before the hour set for receiving bids, and all prospective bidders that have requested or obtained copies of the specifications without said amendments, will be notified. Any amendment will become a permanent part of the specifications and copies will be furnished the Forest Officer.

Interpretation of Estimated Quantities. Bidders are cautioned that the estimate of quantities attached to the proposal will serve, as far as this contract is concerned, only for the purpose of comparing bids. The basis of payment will be actual quantities of work performed and accepted, and if upon completion of the project the actual quantities should show either increase or decrease from the quantities shown in the approximate estimate, the unit price mentioned in the proposal will still prevail.

Ability of Bidder. Each bidder will submit with his proposal a statement setting forth the experience he has had in the prosecution of work of magnitude comparable to that proposed in these specifications. Award to a bidder will not be made unless he can show that he has had sufficient experience to do the work proposed and that he has the ability and the necessary resources to do the work within the time specified.

Causes for Rejection. Any alteration in the proposal by the bidder will be sufficient cause for that bid to be rejected. The bidder must have each item upon which he bids carry its own proportion of the cost as nearly as practicable, and if the bid contains an inadequate or unreasonable price for any item the entire bid may be rejected and given no more consideration than if it had not been presented. A bid may be rejected if all the items in the proposal are not bid upon or if there is failure to comply with any of the provisions required of bidders.

Rejection of Bids. The owner reserves the right to reject any bid or all bids should he decide upon such a procedure, and no bidder will have a claim for damages because of such action by the owner.

Withdrawals. A bidder may withdraw any proposal he has submitted at any time prior to the hour set for the closing of the bids provided the request for withdrawal is signed in a manner identical with the proposals that he is requesting to be withdrawn. No withdrawal or modification will be permitted after the hour designated for closing the bids.

Statement of Work. All the various phases of work enumerated in the specifications with all their individual jobs and overhead, whether specifically enumerated, included by implication, or appurtenant thereto, are to be performed by the contractor under one of the items in the list below, irrespective of whether it is named in the said list. Payment for work performed will be in accordance with the list, subject to changes as provided for under the specifications.

Item No.	Item	Unit	Quantity
1	Embankment, impervious core, Zone 1.....	C. Y.	2660
2	Embankment, Zone 2 of Dam.....	C. Y.	3160
3	Excavation, core trench.....	C. Y.	1200
4	Excavation, spillway.....	C. Y.	2003
5	Excavation, structural.....	C. Y.	50
6	Rock riprap 18" thick.....	S. Y.	960
7	Sand and gravel base for riprap 9" thick.....	C. Y.	210
8	Concrete.....	C. Y.	12.5
9	Reinforcing steel.....	Pounds	770
10	Corrugated metal pipe 30" diameter, 14 ga. double riveted, asphalt dipped, water tight couplings.....	L. Ft.	114
11	Revamping and installing old Calco No. 101, 30" dia. steel gate and frame on concrete inlet structure.....	Lump sum	Lump sum

Item No.	Item	Unit	Quantity
12	Furnishing and installing gate lifting mechanism consisting of gate stem, pipe housing, stem sleeves, stem couplings, oil retainer, and hand wheel lift.....	Lump Sum	Lump Sum
13	Removal of existing rock-filled timber dam...	Lump Sum	Lump Sum

III. Detailed Specifications.

1. Stripping of Dam Site and Borrow Pits. The area to be occupied by the dam, borrow pits and structures shall be cleared of trees, stumps, brush, rubbish, weeds, roots and other combustibles, which shall be piled and burned to complete ash or disposed of in some other satisfactory manner.

The area to be covered by the dam embankment shall be stripped of sod and top soil to a depth sufficient to expose subsoil or rock free of roots and organic matter. Borrow pits shall be stripped in a like manner.

All strippings shall be stockpiled outside of the area of the dam embankment and reservoir. The strippings shall be returned after construction to allow ample soil for revegetation. Surplus strippings shall be spread to blend in with the surrounding contour of the ground surface.

The abutments and the banks of any pits or holes occurring in the foundation shall be sloped not steeper than 1:1 to provide bond with the embankment.

2. Borrow Pits. All materials required for the construction of the earth fill of the dam which are not available from the core trench excavation shall be taken from borrow pits No. 1 and 2 unless otherwise directed by the representative. Borrow pit No. 1 is located about 1000 feet from the dam site while borrow pit No. 2 is located 2.7 miles from the dam site on an old wagon road leading to the dam site. This old wagon road can be made into a good haul road with a very little work. The exact location of the borrow pits shall be designated by the representative.

After borrow is made, the pits shall be left in a reasonably smooth and even condition. In order to avoid the formation of pools in the borrow pits, drainage ditches shall be constructed from the borrow pit to the nearest outlet where such drainage ditches are necessary. The Contractor shall visit the site with the representative and ascertain for himself the location of the borrow pits and the conditions under which the earth material must be obtained and transported.

Topsoil strippings shall be returned after the pits are smoothed and left in contour with the surrounding area. The area will be seeded according to Forest Service specifications.

3. Construction of Core Trench and Core Wall. A core trench of the bottom width and depth shown on the plans shall be excavated in the foundation along the main axis of the dam and shall extend the full length of the dam. The side slopes of the core trench shall be $\frac{1}{2}$:1.

A core wall having a top width of seven feet and side slopes of 3/4 to 1 shall extend the full length of the dam and from the top of the core trench backfill up to a point 2.5 feet below the top of the dam.

The core trench backfill and core-wall embankment shown on the plans as zone number one, shall be a well blended homogeneous mixture composed of fifty percent of the meterial from borrow pit No. 1 and fifty percent from borrow pit No. 2. Mixing of the material from the two borrow pits shall be accomplished as follows: First deposit a horizontal layer approximately two inches in thickness of the material from borrow pit No. 1. On top of this first layer place a two-inch layer of the material from borrow pit No. 2. Blend these two layers together into a homogeneous mixture by means of a suitable disc harrow. The discing shall be sufficient to eliminate all streaks of the separate material and produce a homogeneous mixture. The type of disc harrow used shall be approved by the representative, who shall also specify the minimum number of passes that shall be made with the disc harrow over each two layers of material after the contractor has made mixing tests with his disc harrow.

After the first two layers are mixed, repeat the operation placing a two-inch layer of the material from borrow pit No. 1 and a two-inch layer from borrow pit No. 2 on top of the mixed material and then thoroughly mix the two layers as before. The two operations should produce an eight-inch layer of mixed material.

Each eight-inch layer of mixed material produced shall be compacted by passing a fully loaded sheepsfoot roller over it a minimum of four times. The sheepsfoot roller shall have a minimum weight of 200 pounds per square inch of compaction area of the sheepsfoot projections on the roller.

The fill material shall contain the proper amount of moisture to give the mixed material a high density when compacted. It has been determined by laboratory tests that the optimum water content of a mixture composed of 50 percent of the material from borrow pit No. 1 and 50 percent of the material from borrow pit No. 2 is 18 percent. The water content of the mixed material in zone No. 1 shall be between 16 percent and 18 percent of the dry weight of the mixture. If the moisture content of the fill material is deficient, the fill material shall be sprinkled with sufficient water to give the proper moisture content.

The core trench backfill shall be carried to the level of the original ground before the placement of the embankment in the dam is started. The material excavated from the core trench may be used in the downstream portion of zone two of the dam if deemed satisfactory by the representative.

4. Embankment, Zone Two. This embankment includes all the fill material except that in the core trench and core wall, required to produce a dam to the lines and grades shown on the plans plus the additional allowance for settlement of the fill as specified on the plans. The allowance for settlement is specified on the plans as a percentage of the fill heights.

Before any material is placed in the embankment, the site shall be prepared in accordance with the paragraph on "Stripping of Dam Site and Borrow Pits" of these specifications.

Immediately prior to placement of earth fill material, the surface of the site shall be roughened or corrugated parallel to the centerline of the

dam. The corrugations shall be made with a plow or scarifier in such a manner that no smooth or packed surface remains.

The material for the fill in zone two of the dam shall be obtained from borrow pit No. 1 except that the material excavated from the core trench may be used in the downstream portion of zone two if deemed satisfactory by the representative.

Only suitable inorganic material shall be used in the embankment and any material that contains sod, roots, brush or other deleterious matter shall be wasted. No material shall be deposited upon frozen soil and no earth containing frozen lumps shall be deposited in the fill. No rocks having a maximum diameter greater than four inches shall be included in the fill.

The fill material shall be laid in approximately horizontal layers of eight inches in thickness concurrently with the laying of the corresponding eight inch layer of mixed material in the core wall, zone 1. Each lift in both zones shall be made concurrently and each lift shall extend over the full width and length of the dam and shall be kept uniform in thickness and smooth. Each lift in zone 2 shall be compacted by passing a fully loaded sheepsfoot roller over each layer at least four times. The sheepsfoot roller shall have a minimum weight of 200 pounds per square inch of compaction area of the sheepsfoot projections on the roller.

The moisture content of the fill material shall be sufficient to secure maximum compaction. It has been determined by laboratory test that the optimum water content of the material from borrow pit No. 1 is 12.4 percent. The water content of the fill material for zone No. 2 shall be between 11.5 percent and 12.4 percent of the dry weight of the material. If the moisture content of the material is deficient, the fill material shall be sprinkled with sufficient water to give the proper moisture content.

The embankment shall be deposited to the grades and lines shown on the plans and established by the representative. The finished surfaces of the embankment shall be reasonably smooth.

5. Rock Riprap. Riprap shall be placed over the upstream surface of the embankment as shown on the plans. The stone for riprap must be hard and durable. The riprap when completed shall present a generally smooth surface free from depressions or humps. The riprap is to be 18 inches thick measured normal to the surface. A layer of well graded sand and gravel 9 inches in thickness measured normal to the surface shall be placed on the earth slope to form a foundation for the riprap. The rock riprap may be dumped in place providing that placement of the rock starts at the toe of the slope and is carried progressively up to the top of the dam. The rock shall be properly graded in size so that voids will not exist which would permit wave action to disintegrate the slope. The rock shall be firmly anchored in place and if flat, thin slab rocks are used, they shall be laid on edge or with the long axis perpendicular to the slope.

6. Outlet Tube. The outlet tube through the dam shall be installed in the position indicated on the plans. The pipe shall be laid in a trench excavated in the original ground. The trench shall be of a width sufficient to enable the workmen to properly install the pipe and the side slopes shall

not be greater than 1:1. The trench shall first be excavated to a depth of four (4) inches above the grade of the bottom of the pipe. Just prior to placement of the pipe the bottom of the trench shall be brought to grade by carefully shaping the bottom of the trench to fit the pipe. The contractor shall be paid for excavating the trench for the outlet tube and cutoff collars at his unit bid price per cubic yard for structural excavation. The yardage to be paid for shall be the number of cubic yards measured in original position of material acceptably excavated in accordance with the plan or as directed by the representative. The foundation on which the pipe is to be placed should consist of firm material capable of supporting the outlet tube in a satisfactory manner. Soft or spongy material shall be removed and replaced with selected earth thoroughly tamped in place. The pipe foundation should be free from projecting stones, stumps, or other obstructions.

The contractor shall construct concrete cutoff collars around the pipe at the locations shown on the plans in order to prevent seepage between the pipe surface and the fill. The cutoff collars shall be the size called for on the plans.

After the outlet pipe has been installed and inspected by the representative, the trench shall be backfilled in 3-inch layers with each layer thoroughly compacted to a height of one foot above the top of the pipe. If the trench does not extend to a height of one foot above the top of the pipe, the embankment adjacent to the pipe shall be compacted in a like manner to this height. The backfill or embankment adjacent to the cutoff collars shall also be compacted in 3-inch layers to a height of one foot above the top of the cutoff collars. This backfill and embankment adjacent to the pipe and cutoff collars shall be made with fine earth material suitable for compaction in 3-inch layers and each layer shall be thoroughly compacted with hand or mechanical tampers. The layers on each side of the pipe and cutoff collars shall be placed and tamped concurrently so as to prevent displacement of the pipe or cutoff collars by unequal side thrusts.

If the earth used does not contain sufficient moisture for good compaction, water shall be added to the borrow pit or sprinkled on each layer of earth as placed in order to obtain the proper moisture content for the degree of compaction specified.

Compaction shall be carried directly to all concrete and metal surfaces so that there will be no possibility of seepage at the junction of the pipe and cutoff collar surfaces and the earth backfill or embankment. Hand or mechanical compaction shall be carried from the point of contact of the earth with the structure to a minimum height of one (1) foot over the top of the structure and laterally a minimum of three (3) feet from each outside surface or as far as may be required to blend with the body of the fill which is compacted by a sheepsfoot roller.

7. Corrugated Metal Pipe. The corrugated metal pipe shall be galvanized pure iron, close-riveted on all seams, asphalt dipped and shall conform to Federal Specifications QQ-C-806. The thickness of metal shall be the gage specified on the plans. The pipe lengths shall be joined together with water-tight metal connections which are held in place by circumferential bands that shall be tightened carefully to prevent leakage. Each joint shall

contain an asphalt coated layer of burlap or felt placed between the pipe and the connector. The pipe installation shall be such that the longitudinal laps are at the sides along the spring line, and the inside circumferential laps point downstream.

8. Headgate. The contractor will use the thirty-inch diameter Hardesty Model No. 101 vertical slide gate now installed on the steep pipe through the old dam. The contractor will revamp the steel frame and gate ring to fit the new concrete inlet structure. If he is unable to revamp the old gate rings, he will furnish a new gate ring suitable for anchoring to the concrete inlet structure. The contractor will install the old metal slide gate on the concrete inlet structure, and furnish and install the gate lifting mechanism consisting of the gate stem, stem sleeves and couplings, oil retainer, pipe housing and hand wheel lift in accordance with the plans. The gate ring shall be set in place at the time the intake structure is poured to provide a water-tight connection. If it is not available at the time the structure is poured, a recess shall be left in the concrete of large enough dimensions to permit grouting in the anchor bolts and gate seat. The contractor will be paid the lump sum bid for revamping and installing old gate and frame. The contractor will also be paid the lump sum bid for furnishing and installing the gate lift mechanism.

9. Spillway Excavation. The contractor shall excavate the cut spillway to the dimensions shown on the plans. The spillway site is located approximately 2250 feet southeast of Station 1 + 21.5 of the new dam. The excavation shall be wasted close to the spillway at the sites designated by the representative and approved by the Forest Officer in charge. The contractor will be paid for unclassified spillway excavation at his unit bid price per cubic yard for spillway excavation. The yardage to be paid for shall be the number of cubic yards measured in original position of material acceptably excavated in accordance with the plans or as directed by the representative.

The wasting from excavation shall be disposed of to conform with the contour of the surrounding area. Both the excavation and the waste material will be seeded thus providing revegetation of the raw area.

10. Concrete - Composition. Concrete for structures shall be composed of Portland cement, sand, crushed rock or gravel and water mixed in such proportions as to produce a minimum compressive strength of 3000 pounds per square inch at the end of 28 days.

The proportioning of cement, sand, crushed rock or gravel and water shall be such as to produce a workable concrete mixture, neither too sandy nor too harsh, with no more water in the mixture than is necessary to create the required degree of plasticity for proper handling without segregation of the aggregates. Including the free water in the aggregates, the quantity of water used shall not exceed six (6) gallons per sack of cement.

The exact proportions of the cement, sand and gravel or crushed rock in the concrete mixture will depend on the nature of the aggregates that are used. Generally a concrete of the required strength conforming to the above

limitations is secured when mixed in the following proportions: 1 part of cement to $2\frac{1}{4}$ parts of sand and $3\frac{1}{4}$ parts of gravel or crushed rock. The above proportions are by weight. If the aggregates used do not give the required workability when combined in the above proportions, the proportions shall be modified to produce workable concrete of the desired slump without exceeding a water-cement ratio of six gallons of water per sack of cement. The slump at point of placement will be within the limits of four and one-half ($4\frac{1}{2}$) to six (6) inches, depending on the nature of the work done.

The representative shall approve the proportioning of the concrete mixture before any concrete is placed, and, if necessary, shall alter the proportioning during any run of concrete in order to obtain workable concrete of the required strength.

Reinforcing steel, cement and aggregates shall be stored at the site in such a manner as to prevent deterioration or intrusion of foreign matter. Any material that has deteriorated sufficient to weaken the strength of the concrete shall not be used for concrete.

11. Portland Cement. In general, the cement used in concrete shall be Portland Cement meeting government specifications for the same. (Designated C-33).

If alkali is present in the soil adjacent to the structure in sufficient quantity to be harmful to the concrete, the cement used shall be sulphate resisting Portland Cement meeting A.S.T.M. specifications.

12. Aggregates.

a. General - Concrete aggregates shall conform to the tentative specifications for concrete aggregates (A.S.T.M. Serial Designation C33-37T). Where aggregates conforming to these specifications are not obtainable, aggregates that have been shown by tests or by actual service to produce concrete of the required strength, durability, watertightness, and wearing qualities, may be used if authorized by the representative. Aggregates approved for use by state highway departments are satisfactory.

b. Fine Aggregate - The sand particles shall be clean, hard, dense, durable, uncoated, non-organic rock fragments that will pass a screen having 1/4-inch square or equivalent round openings. It shall be free from injurious amounts of dust, lumps, soft or flaky particles, shale, alkali, organic matter, loam, and other deleterious substances. The sand shall be well graded from coarse to fine and when tested by means of standard laboratory sieves, shall fall within the following limits of gradation:

	Cumulative Percent by Weight
Retained as a No. 4 sieve.....	0 to 8
Retained as a No. 14 sieve.....	20 to 50
Retained as a No. 48 sieve.....	80 to 90
Retained as a No. 100 sieve.....	93 to 100

When subjected to the "Standard Method of Test for Organic Impurities in Sand for concrete," A.S.T.M. Designation C40-33, the fine aggregate shall not show a color darker than the standard color.

c. Coarse Aggregate. Coarse aggregate shall consist of crushed rock or gravel composed of clean, hard, dense, durable, uncoated fragments free from injurious amounts of soft, friable, thin, elongated, or laminated pieces, alkali, organic or other deleterious matter. Ninety-five (95) percent of the coarse aggregate shall be retained on a screen having a 1/4-inch square mesh or equivalent round mesh. Coarse aggregate shall be well graded from coarse to fine and when tested by means of laboratory sieves, shall conform to the following requirements:

	Percent
Passing a No. 4 sieve	0 to 5
Passing a 3/8-inch sieve	10 to 30
Passing a 3/4-inch sieve	35 to 70
Passing a 1½-inch sieve	95 to 100

d. Pit Run Sand and Gravel. Pit run sand and gravel may be used if it has a proper gradation, is clean and meets the other requirements for producing good concrete. To produce good workable concrete, a minimum of 37 percent of the pit run sand and gravel should be sand passing through a No. 4 sieve. If the sand in the mixture is less than 37 percent, additional sand should be added to the pit run sand and gravel to give the minimum required amount. This additional sand can undoubtedly be obtained by screening it out of the pit run material now intended for use as concrete aggregate. The proportion of cement to pit run aggregate will vary with the gradation of the aggregate. It is anticipated that a workable mix of the required strength will be obtained when mixed in the proportion of one part of cement to 4 parts of pit run aggregate. These proportions are by weight. If the pit run aggregate used does not give the required workability when used in these proportions, the proportion of pit run aggregate shall be modified to produce workable concrete of the desired slump without exceeding the water-cement ratio of six gallons of water per sack of cement.

13. Water. The water used in mixing shall be reasonably clean and free from objectionable quantities of silt, organic matter, alkali, salts, or other impurities.

14. Mixing. The cement, sand, crushed rock or gravel shall be mixed in a concrete mixer of approved type and size until there is a uniform distribution of the materials throughout the mass. The concrete mixer shall be rotated at the speed recommended by the manufacturer, and mixing shall be continued for at least one minute after all materials are in the mixer. Each mixer shall be completely discharged before being recharged. Overloading of the mixer shall not be permitted. Only sufficient water shall be added in mixing to produce a workable mix.

Before mixing is started, all equipment used for mixing and transportation of concrete shall be thoroughly cleaned.

15. Temperature of Concrete. Concrete when deposited in the forms shall have a temperature of not more than 90° F., and not less than 40° F. In freezing weather the minimum temperature is 50° F.

16. Forms. Forms to confine the concrete shall conform to the shape, lines and dimensions of the member as called for on the plans. The forms shall be of sufficient strength to hold the concrete and to withstand the necessary pressure, ramming and vibration without deflection from the prescribed line.

The surface of all forms in contact with the concrete shall be rigid, tight and smooth. Wooden forms to be used more than once shall be maintained in serviceable condition and thoroughly cleaned before re-use.

Before placing concrete, the surface of all forms shall be oiled with suitable non-staining oil, and all debris shall be removed from the spaces to be occupied by the concrete.

Forms shall be removed in such a manner as to insure the complete safety of the structure. In no case shall the forms be removed until the members have acquired sufficient strength to support safely and without distortion their weight and the load superimposed upon them.

17. Placing. Concrete shall be placed in the work before it has stiffened sufficiently to require retempering. If any concrete before placement has become so stiff that proper placement cannot be assured, the concrete shall be wasted. All concrete surfaces which have set for 12 hours or more upon or against which concrete is to be placed and to which new concrete is to adhere, shall be cleaned of all laitance and loose or defective surface concrete and the surface of the set concrete treated in accordance with the specifications outlined under the paragraph "Construction Joints."

When the placing of concrete is to be interrupted long enough for the concrete to take its final set, beveled 2-inch by 4-inch lumber shall be placed in the working face of the concrete with the 4-inch side at the surface and parallel to the working face so as to provide a shear joint between the two pours.

Only methods of transporting and placing which will deliver concrete of the required consistency into the work, without segregation and without objectionable porosity, shall be used. Concrete shall be deposited in all cases as nearly as practicable directly into its final position and shall not be caused to flow in the mass in a manner to permit or cause segregation. No concrete shall be placed in water except with written permission, and the method of depositing the concrete shall be subject to approval. No concrete shall be placed in running water.

No concrete that has been contaminated by foreign material shall be deposited on the work, nor shall retempered concrete be used.

When pouring of concrete is once started it shall be carried on as a continuous operation until the placing of the panel or section is completed. The top surface shall generally be leveled. When construction joints are necessary they shall be made in accordance with instructions given in these specifications.

All concrete shall be compacted by suitable means during the operation of placing and shall be thoroughly worked around reinforcements, imbedded fixtures and into the corners of the forms. Where conditions make compacting difficult or where reinforcement is congested, mortar containing the same proportion of sand to cement as used in the concrete shall be deposited in the forms in such places. Concreting shall be carried on at such a rate that the concrete is at all times plastic and flows readily into the spaces between the bars.

The surface of concrete shall be smooth and free from projections, honey-combing, and other objectionable defects. Immediately upon removal of forms all unsightly ridges or lips shall be removed, and any undesirable local bulge or exposed surface shall be remedied by tooling and rubbing to the satisfaction of the representative.

When concrete is to be placed during freezing weather the necessary precautions shall be taken to prevent it from freezing for a period corresponding to the moist curing period. When necessary, concrete materials shall be heated before mixing. The temperature of the mix shall never be greater than 100° F. The methods of heating the materials and protecting the concrete shall be approved by the representative. Salt, chemicals, or other foreign material shall not be mixed with the concrete for the purpose of preventing freezing or for any other reason. Before concreting is started all ice, snow and frost should be removed from the interior of forms and from reinforcing steel and embedded parts. Concrete shall not be placed on a frozen sub-grade.

18. Construction Joints. Joints not indicated on the plans shall be made and located so as not to impair the strength of the structure. When a joint is to be made the surface of the concrete shall be thoroughly cleaned and all laitance removed. Immediately before placing of the new concrete the contact surface previously placed shall be thoroughly wetted and all surplus water shall be removed from depressions. After cleaning and wetting, all horizontal concrete surfaces shall be covered with a layer of mortar three-quarters (3/4) of an inch thick consisting of the regular concrete mixture without the coarse aggregate. The regular concrete mix shall be placed immediately thereafter.

19. Finishing. The surface of concrete finished against forms shall be smooth, free from projections and thoroughly filled with mortar. Immediately on removal of forms, all holes left by removal of rods and all voids shall be neatly filled with cement mortar of the same proportions as the mortar in the concrete. All unsightly ridges or lips shall be removed.

20. Curing and Projection. Exposed surfaces of concrete shall be protected from the direct rays of the sun for at least three (3) days. All concrete shall be kept continuously moist for at least one week after the concrete has been placed. The method of keeping concrete moist shall be by sprinkling or spraying with water, or by other suitable and approved means. In freezing weather, suitable means shall be provided for maintaining the concrete at a temperature of at least 50° F. after placing, until the concrete has thoroughly hardened, but for not less than 72 hours. It shall be kept from freezing for a period of not less than one week.

21. Reinforcement Bars. Metal reinforcement shall conform to the requirements of the "Standard Specifications for Billet-Steel Concrete Reinforcement Bars" of Intermediate Grade, A.S.T.M. Serial Designation A15-30, or for "Rail-Steel Concrete Reinforcement Bars" (A.S.T.M. Serial Designation: A16-35). The provision in these specifications for machining deformed bars before testing shall be eliminated. Metal reinforcement, before being placed, shall be free from rust scale or other coating that will destroy or reduce the bond. Reinforcement shall be formed to the dimensions indicated on the plans. Cold bends shall be made around a pin having a diameter of four (4) or more times the least dimensions of the bar. Metal reinforcement shall not be bent or straightened in a manner that will injure the material. Bars with kinks or bends not shown on the plans shall not be used. Heating of reinforcement for bending will not be permitted.

Steel bars shall be placed in the concrete wherever shown on the drawings or otherwise prescribed. The steel used for concrete reinforcement shall be so secure in position that it will not be displaced during the depositing of the concrete, and special care shall be exercised to prevent any disturbance of steel in concrete that has already been placed. In slabs and beams, splices of reinforcement shall not be made at points of maximum stress without the approval of the representative. Splices, where permitted, shall provide sufficient lap to transfer the stress between bars by bond and shear, which is a minimum of 40 diameters.

22. Structural Excavation for Inlet and Outlet Structures. All excavation shall be made in accordance with the lines and elevations shown on the plans and established by the representative. Special care shall be taken not to disturb the bottom of the excavation after excavation to final grade has been made. Wasted excavation shall be disposed of as directed by the representative and approved by the Forest Officer in charge.

The contractor may make the width and length of excavation for the inlet and outlet structures any reasonable distance to enable him to proceed with his construction plan. However, the yardage to be paid for shall be the number of cubic yards, measured in original position, of material acceptably excavated in conformity with the plans or as directed by the representative, but in no case shall any yardage be included in the measurement for payment which is outside of a volume bounded by vertical planes 12 inches outside and parallel to the neat lines of the footings.

Structural excavation shall also include the trench excavation for the outlet tube and cutoff collars made in accordance with the plans and as directed by the representative.

23. Backfilling Around Inlet and Outlet Structures. All spaces excavated and not occupied by the structure shall be backfilled with earth up to the surface of the surrounding ground, with a sufficient allowance for settlement as determined by the representative. All material used for backfilling shall be of a quality acceptable to the representative and shall be free from large or frozen lumps, wood, or other extraneous material. All backfill shall be thoroughly compacted and, in general, its top surface shall be neatly graded. No backfill shall be placed against concrete structures until permis-

sion shall have been given by the representative and preferably not until the concrete has been in place 28 days or until the concrete has developed a strength of 3000 pounds per square inch. All backfills shall be revegetated to the satisfaction of the Forest Officer in charge.

24. Embankment Around Inlet and Outlet Structure. This item includes all the fill material around the inlet and outlet structures above the backfill placed in accordance with the plans or as directed by the representative. Only suitable inorganic material shall be used in this embankment. No material containing sod, roots, brush or other deleterious matter shall be placed in the embankment. The fill shall be thoroughly compacted and its top surface shall be neatly graded. The contractor shall be paid for this embankment measured in place at the unit bid price per cubic yard for embankment zone 2. The material for this embankment shall be obtained from a borrow pit No. 1.

This proposal covers construction of a dam for the Silver Lake Irrigation District, Boulder, Wyoming, and includes the furnishing of labor, materials and equipment required to build the dam complete in accordance with the plans and specifications.

In accordance with the Notice to Contractors given by the Silver Lake Irrigation District of Boulder, Wyoming [redacted] 15, 19 51, and subject to all conditions thereof, the undersigned offers and agrees, should the bid be accepted, to furnish all labor and materials and to perform the work for said owner at the prices shown on the following bid schedule:

The bid schedule below lists the various divisions of construction contemplated in these specifications, together with an estimate of the units of each. With these units as the basis, the bidder will extend each item, using the cost he inserts in the unit column. Any total cost found inconsistent with the unit cost when bids are examined will be deemed in error and corrected to agree with the unit cost which shall be considered correct. It is expressly understood that all the various phases of work enumerated in the plans and specifications, with all their individual jobs and overhead, whether specifically enumerated, included by implication or appurtenant thereto are to be performed by the contractor under one of the items listed below, irrespective of whether it is named in said list.

Item No.	Item	Unit	Quantity	Unit Cost	Total
1	Embankment, impervious core, zone 1....	C. Y.	2660		
2	Embankment, zone 2 of dam.....	C. Y.	3160		
3.	Excavation core trench.....	C. Y.	1200		
4	Excavation, spillway.....	C. Y.	2003		
5	Structural excavation.....	C. Y.	50		
6	Rock riprap 18" thick.....	C. Y.	960		
7	Sand & gravel base for riprap, 9" th...	C. Y.	210		
8	Concrete.....	C. Y.	12.5		
9	Reinforcing steel.....	Pounds	770		
10	Corrugated metal pipe 30" dia., 14 ga. double-riveted, asphalt dipped, water-tight couplings.....	L. Ft.	114		
14	Sheep foot rolling				
15	Grouting #1 & #2 filled with [illegible]				
16	[illegible]				

Item No.	Item	Unit	Quantity	Unit Cost	Total
11	Revamping and installing old Calco No. 101, 30" dia. steel gate and frame on concrete inlet structure.....	Lump sum	lump sum		80 —
12	Furnishing and installing gate lifting mechanism consisting of gate stem, pipe housing, stem sleeves, stem couplings, oil retainer and hand wheel lift..	Lump Sum	Lump Sum		153 75
13	Removal of existing rock filled timber dam.....	Lump Sum	Lump Sum		200 —
	GRAND TOTAL.....				$15000 —

The undersigned represents that he has examined the area and ground of the proposed work and is thoroughly familiar with the conditions under which the work is to be done, and he agrees that this bid is made subject to the Instructions to Bidders, General Conditions, Specifications, Schedules and Drawings referred to in the Notice to Contractor, and which have been furnished to him by the owner, and that the same are made a part thereof.

The undersigned agrees, in case this bid is accepted, to execute a written contract and to furnish a performance bond, as provided in the Specifications. He further agrees to initiate work under the contract within 120 days after the contract is signed and to complete the same within 120 days thereafter, unless an extension of time is granted as provided in the specifications. The undersigned presents with this bid a certified check, draft or bid bond, in the sum of $_____. Dated this 19th day of Aug, 1957.

D M Field Const

_____

ATTACHMENT F

PREVIOUS DAM SAFETY INSPECTION REPORTS

USDA-Forest Service

M AND RESERVOIR PHYSICAL DATA EET

GENERAL INFORMATION

NAME OF PROJECT: Silver Lake FOREST: Bridger

OWNER: Silver Lake Irrigation Co. DISTRICT: Pinedale

AUTHORITY: S.U. STREAM: Silver Creek (Or LU Project)

PRIMARY PURPOSE: Irrigation YEAR CONSTRUCTED: 1953

DRAINAGE BASIN: Max. Elev. _____ m.s.l; RESERVOIR ELEV.: _____ m.s.l.

LOCATION: Section 5 & 8 27&34 ; Township * 33 32 ; Range 105 105 ; Meridian 6th P.M.

OR: State Coordinates x _____ y _____ ; OR: Lat. _____ Long. _____

DRAINAGE AREA: Total _____ Sq.Mi; National Forest _____ Sq.Mi.

RESERVOIR AREA: Total 200 Acres; National Forest 200 Acres

PERCENT OF DAM ON N.F. (OR LU) LAND: 100 ; STORAGE CAPACITY: 2,152 Ac.Ft.

ADMINISTRATIVE CLASSIFICATION, (FSM 5670.21); A X B _____ C _____

HAZARD CLASSIFICATION, (FSM 5670.22); High _____ Moderate X Low _____

DAM STRUCTURE DATA

LENGTH: 200 Feet; TOP WIDTH: 10 Feet; HEIGHT: 25 Feet

SIDE SLOPE: UPSTREAM 4 : 1; DOWNSTREAM 4 : 1

TYPE OF CONSTRUCTION: Earth Fill X Other Rock up-rap face

CORE WALL: Clay ____ Masonry ____ Concrete ____ None ____ Other Unknown if exists.

OUTLET DATA

DESCRIPTION: Concrete outlet

DIMENSIONS: _____ ; DESIGN CAPACITY: _____ cfs

TYPE OF CONTROL: Metal Gate

SPILLWAY DATA NONE

DESIGN DISCHARGE: _____ cfs; _____ cfs/sq.mi.; Frequency _____ Years

WIDTH (AT CREST): BOTTOM _____ Ft.; TOP _____ Ft.; DEPTH _____ Ft.

DEPTH OF DESIGN FLOW IN SPILLWAY: _____ Ft.; FREEBOARD: _____ Ft.

MATERIAL: Masonry _____ Riprapped _____ Sodded _____ Other _____ Unlined _____

DATA COLLECTED BY: _____ (Name), _____ (Title); _____ (Date)

5670-1 (1/60)

USDA-Forest Service

\M MAINTENANCE INSPECTION SHEET

(REQUIRED ANNUALLY FOR ALL PROJECTS UNDER FOREST SE..ICE SUPERVISION)

NAME OF PROJECT: Silver Lake FOREST: Bridger

OWNER: Silver Lake Irrigation Co. DISTRICT: Pinedale (Or LU Project)

AUTHORITY: S. U. STREAM: Silver Creek

PURPOSE: Irrigation YEAR CONSTRUCTED: 1953

LOCATION: Section 5 & 8 (27&34) ; Township 32 (33) ; Range 105 (105) ; Meridian 6th P.M.

OR: State Coordinates x _____ y _____; OR: Lat. _____ Long. _____

DAM HEIGHT: 25 Feet; GROSS STORAGE CAPACITY: 2,152 Acre-Feet

(Check condition of project works against check list on back of this form. Describe below any deficiencies by reference number. Attach separate sheet, when necessary, for additional description or photographs. Owner should be notified immediately of deficiencies which require attention.)

All O.K. as far as dam and resevoir goes.

The Co. was to block and obliterate wagon road into area after construction. There have been rumors of jeeps using the road. Should be checked by DFR and Co. made to close out road so impassable - F.S. should post Wilderness Boundary.

INITIAL ACTION TAKEN TO CORRECT DEFICIENCIES: _____

MAINTENANCE CONDITION SUMMARY

HAZARD CLASS	MAINTENANCE CONDITION	CRITICAL PROJECT
L ___ M X H ___	U ___ P ___ S X	U + M or H ___

INSPECTED BY: _____ (Name), _____ (Title); _____ (Date)

(OVER)

5670-2 (1/60)

INSTRUCTIONS FOR DAM MAINTENANCE INSPECTION

5673.1 - Inspection Tools. Essential to the proper inspection of any water project are:

1. A copy of the permit or other document authorizing the project.
2. A copy of the plans and specifications.
3. The last previous inspection report.
4. Photographs showing project features as fully constructed and accepted and/or photos taken at time of last inspection.
5. A camera, measuring tape, and hand level.
6. A checklist of features and conditions requiring inspection.

5673.2 - Inspection Checklist

1. Permit Content Check. The following general items should be considered:
   a. Change in ownership.
   b. Need for boundary changes.
   c. Expiration of authority to occupy.
   d. Appropriateness of charges.
   e. Desirability of the use.
   f. Adequacy of the conditions of occupancy authorized by the permit, easement, license, or other authorization.
   g. Conformance to the terms of the permit, easement, license, or other authorization.
2. Inspection of Maintenance. Indicators of needed maintenance are:
   a. Seepage through the embankment. In earth embankments, there is often some seepage at the base. Seepage above the base or down any portion of the face, and especially muddy water or marked increase in seepage, are causes for concern.
   b. Less freeboard than called for in the plans. Reductions may be caused by foreign material in the spillway, such as beaver dams, debris, flashboards, or by reductions in elevation of the dam or fill crest by erosion, vehicular traffic, or settlement of the dam or fill.
   c. Erosion on borrow areas or on either face of earth embankments caused by wind, waves, precipitation, cattle usage, etc. Erosion of spillway or outlet channel. Erosion in diversion ditches or that caused by break in ditch banks.
   d. Slipping, displacement, or voids in riprap on spillway or fill faces.
   e. Cracks in fill or other works caused by drought, settlement, faulty design or construction, etc.
   f. Burrowing in or near the dams, of beavers, muskrats, badgers, or other rodents.
   g. Leaking around outlet pipe or conduit.
   h. Saturation of embankment near downstream toe of dam.
   i. Trees or deep-rooted shrubs growing on embankment.
   j. Silt or debris deposits that could lead to harmful interference with normal functioning.
3. Inspection of Operations. The following operational functions should be considered:
   a. Maintenance of required pool levels.
   b. Check that natural lake levels are not lowered.
   c. Proper water releases in accordance with conditions of special-use permit, easement, license, or other authorization.
   d. Care should be exercised in lowering water in reservoirs or canals to avoid slipping and sloughing of fills. Too rapid lowering or drawdown may cause dangerous slides and slips.
   e. Valves and gate mechanisms should be locked to prevent operation by unauthorized persons.
   f. Unless otherwise operated, each valve or gate should be opened once a year to keep mechanism free and to flush silt away from intake.
   g. Catwalks, footbridges, and similar structures should be kept in good repair to prevent injury to the public.
4. Maintenance Condition Summary
   a. Hazard Class as defined in FSM 5670.22.
   b. Maintenance Condition
      (U) Deficiencies exist which affect safety of structure.
      (P) Deficiencies exist which do not affect safety of structure.
      (S) Project is in satisfactory condition.
   c. Critical Project--(U) maintenance condition plus M or H hazard class constitutes critical project.

USDA FOREST SERVICE

DAM MAINTENANCE INSPECTION REPORT

Ref: FSM 7572.23

1. REGION (3-4)	2. FOREST (5-6)	3. RANGER DIST. (7-8)	4. FOREST INV. NO. (9-12)
04	03	07	~~1008~~ 2011

5. NAME OF DAM: **Silver Lake Dam**

BLOCK I - MAINTENANCE INSPECTION CHECKLIST

ITEM (Describe deficient items on attached sheets).	NEEDED REPAIRS (By priority) 1	2	None
1. EMBANKMENTS			
a. Slumps, slides			X
b. Settlement			X
c. Cracks			X
d. Seepage			X
e. Erosion			X
f. Slope facing			X
g. Debris			X
h. Traffic damage			X
i. Brush, trees			X
j. Burrows			X
k. Other			X
CONCRETE STRUCTURES			
c. Settlement			X
b. Overturning			X
c. Heaving			X
d. Cracks, spalls		X	
e. Joints			X
f. Undermining			X
g. Drains			X
h. Seepage			X
i. Other			X
3. GATES, CONTROLS			
a. Corrosion			X
b. Mechanical			X
c. Structural			X
d. Clogging			X
e. Access **Locked**			X
f. Other			X

ITEM (Describe deficient items on attached sheet)	NEEDED REPAIRS (By priority) 1	2	None
4. CLOSED CONDUITS **24" pipe outlet**			
a. Settlement			X
b. Displacement			X
c. Cracks, spalls			X
d. Seepage			X
e. Clogging			X
f. Erosion			X
g. Corrosion			X
h. Joints			X
i. Other			X
5. SPILLWAYS			X
a. Obstructions			X
b. Erosion			X
c. Structural			X
d. Vegetation			X
e. Other			X
6. DOWNSTREAM CONDITION			
a. Backwater			X
b. Erosion			X
c. Bars, pools			X
d. Boils, piping			X
e. Other			X
7. RESERVOIR			
a. Shore erosion			X
b. Debris			X
c. Sediment			X
d. Other			X
8. OTHER (Identify)			
a.			X
b.			
c.			
d.			

CARD NO. 12

(OVER)

7500-2 (2/69)

BLOCK II - MAINTENANCE COST ESTIMATE

ITEM OF WORK	UNIT	UNIT COST	QUANTITY PRIORITY 1	QUANTITY PRIORITY 2	COST PRIORITY 1	COST PRIORITY 2
2 (d.) Repair cracked concrete around outlet control stem	job	$500		job		$500
TOTALS (*Enter in Block III, below*) ▶						$500

BLOCK III - SUMMARY MAINTENANCE INSPECTION REPORT

1. DATE OF INSP. (13 18): 8 / 21 / 75 (MO. / DAY / YR.)

2. HIGHEST PRIORITY CHECKED IN BLOCK 1. (19): 2

3. EST. MAINT. COST ($1,000)
a. PRIORITY 1 (20 23): ---.L
b. PRIORITY 2 (24 27): ---.5

4. EST. ENGINEER TIME NEEDED (MAN-HR.)
a. PRIORITY 1 (28 30): --0
b. PRIORITY 2 (31 33): --0

5. EST. AID & TECH. TIME NEEDED (MAN-HR.)
a. PRIORITY 1 (34 36): --0
b. PRIORITY 2 (37 39): --0

6. NOTICE TO OWNER (40): YES / NO

7. DATE OF NOTICE (41 46): --/--/-- (MO. / DAY / YR.)

8. LIMITATION (47): YES / NO — N

9. TYPE OF LIMITATION (48): F

10. REVISED ESTIMATE OF INSPECTION TIME (MAN-HRS.)
a. ENGINEER (49-50): 2
b. FOREST OFFICER (51-52): --
c. AID & TECH. (53-54): --

CARD NO. 12

REPORTED BY (*Name & signature*)	TITLE	DATE
Roy R. Grant	Civil Engineer	12-10-75

GPO 870-81

Exhibit A

U.S. FOREST SERVICE

SUPPLEMENTAL NARRATIVE SHEET DAM MAINTENANCE INSPECTION REPORT (Ref: FSM 7572.23)	1. Region (3-4)	2. Forest (5-6)	3. Ranger Dist (7-8)	4. Forest Inv. No. (9-12)
	0 4	0 3	0 7	~~10 08~~ 2011
	5. Name of Dam: Silver Lake Dam			

ITEM		DEFICIENCY
		People present at inspection: Qualified Engineer, Roy Grant; Foresters Dave Walker and Don Stewart
2(d)	2	Concrete is cracked around outlet control stem.
		This lake has an outlet stream around the lake to the southeast from the dam which allows approximately four feet of freeboard on the dam above maximum lake level. There is also a spillway in the dam which is higher than the outlet stream and appears to have never had water flowing through it.

Reported By (Name and Signature)	Title	Date
Roy R. Grant	Civil Engineer	12-10-75

(SUPPLEMENTAL SHEET TO WO FORM 7500-2)

R-4 - 7500 - 2 (4/74)

UNITED STATES DEPARTMENT OF AGRICULTURE
FOREST SERVICE

FILE

DISTRICT FOREST RANGER
PINEDALE RANGER DISTRICT
PINEDALE, WYOMING 82941

2720
January 13, 1976

Mr. Jim King
% Silver Lake Irrigation Company
Boulder, Wyoming 82923

Dear Mr. King:

Enclosed is a copy of the inspection of the dam on Silver Lake conducted in August, 1975. You will note that the only deficiency observed was cracked concrete around the outlet control stem. These cracks should be patched to prevent further deterioration. As this is considered to be a priority 2 job there is no great urgency for making such repairs immediately, however, they should be preformed within the next couple of years. Would you please give this matter consideration and let us know when you intend to schedule these repairs.

Sincerely,

Dave Walker
For
TED E. COX
District Forest Ranger

Enclosures

PINEDALE R.D.
BRIDGER-TETON N.F.
APR 8 1976

Route to:	Action	Int
Ranger		
Forester		
Range Con.		
Wilderness		
Dev. Rec.		
C. Eng.		
D. Clerk		
Rec. Plan.		
Timber For.		

Dear Sirs:

We plan to caulk these cracks with a special compound purchased through the SCS office sometime in July or Aug. of '76.

Sincerely,
James H. King
Sec Treasurer
Silver Lake Irrigation Dist.

6200-11 (1/69)

WYOMING DAM INSPECTION REPORT

Name of Dam Silver Lake Date 17 July 1979

Permit No. 3970 R 5769 Water Division Number four, Distr. #7

County: Sublette Location:

Section 3 Township 32 Range 105

Type of Dam (circle) EARTHFILL, ROCKFILL, CONCRETE, OTHER

Estimate Actual Capacity: 2000 Actual Capacity: 2151

Estimate Height: 30 Actual Height:

Waterlevel - Feet Below Spillway: 17 Estimate Spillway Width: 60

Estimate Freeboard (Spillway to Top of Dam): 7

Use: IRRIGATION, MUNICIPAL, (circle), OTHER, (specify)

Fill in all blanks, if unknown - enter unknown; or not applicable - enter N/A; if none - enter none.

DIRECTIONS: Mark an "X" in the Yes or No column and circle the work or phrase which applies.

		Yes	No
1.	Are the roads to the dam adequate to allow ACCESS BY EMERGENCY EQUIPMENT and TRAVEL ACROSS THE DAM (i.e., TRUCKS, AMBULANCES)?		X
2.	Is there DEBRIS, TREES, or BRUSH on the upstream slope that prevent seeing the entire surface of the slope?		X
3.	Are there TREES or BRUSH on the CREST, or DOWNSTREAM SLOPE that prevent seeing the entire surface?	X	
4.	Are there CRACKS , SLIDES, SLUMPS, BOILS, SETTLEMENT or OTHER on the UPSTREAM SLOPE, CREST, or DOWNSTREAM SLOPE?		X
5.	Are there RODENT HOLES or ERODED GULLIES on the UPSTREAM or DOWNSTREAM SLOPE?		X
6.	Is the upstream slope eroded from wave action?		X
7.	Is there FLOWING WATER or LARGE BOGGY SPOTS at the toe of the dam?		X
8.	Are there FLOWS OF WATER or WET SPOTS above the toe of the dam?		X
9.	Is the riprap DISPLACED or BROKEN DOWN or MISSING?		X
10.	Are there toe drains?		X
11.	Is the water from the TOE DRAINS or LEAKS found to be MUDDY or SANDY?		X N/A
12.	Are any of the concrete portions excessively CRACKED or SPALLED?		X
13.	Is the OUTLET CONTROL or GATE found to be STUCK, BROKEN, or EXCESSIVELY CORRODED?		X

OVER

	Yes	No
14. Is the outlet control easy to get to?		X
15. Is released water UNDERCUTTING THE OUTLET or ERODING THE EMBANKMENT?		X
16. Does the spillway channel show significant EROSION, BACK-CUTTING or DETERIORATION?		X
17. Is the spillway obstructed with FLASHBOARDS, TREES, DEBRIS, BRUSH or OTHER?		X
18. Is there evidence that the dam has been overtopped?		X
19. Are spillway WALLS, FLOOR, CONTROL SECTION, and ENERGY DIS-SIPATOR in POOR condition?		NA
20. Is the outlet pipe BLOCKED, or EXCESSIVELY CORRODED or OTHER?		NO
21. Is the reservoir usually full YEAR ROUND, OVER ½ OF YEAR, or LESS THAN ½ OF YEAR?		
22. Should this dam be promptly inspected by a field engineer?		X
23. Are photographs to be forwarded to Headquarter's Office?	X	

24. Additional Comments: 3 - Some Small trees willows & other brush on down Stream side - otherwise OK

Inspected By: Chuck MacDhuine
Hydrographer - Comm

Rev. 4/03/85

WYOMING DAM INSPECTION REPORT

Name of Dam Silver Lake Date 8-13-92

Permit Nos. 5769 Res Water Division Number 4 District # 7

County: Sublette Location: ¼ Section, Lot, Tract: Within Wilderness Unsurveyed

Section _____ Township 33N Range 105W

Type of Dam (circle) EARTHFILL, ROCKFILL, CONCRETE, OTHER _____

* Hazard Rating: low

Estimated Capacity: As Permitted Capacity - From Plans: 2151.63 AF

Estimated Height (Hand Levelled): 25' Height - From Plans: 24.5'

Source (Stream Dam located on and/or supplied from - including downstream tributaries): Dam located at outlet of Silver Lake Discharges into N. Fork Silver Creek. Spillway flows into Silver Creek

Water Level - (Circle which one) Feet Below Principal Spillway Unknown @ or Emergency Spillway Invert of pipe ≈ 21' below dam crest

Estimate Spillway Width: 35'-40' @ Control Section

Estimate Freeboard (Spillway to Top of Dam): 6' shown on plans

Size and Type of Outlet Pipe (Metal or Concrete): 30" Φ CMP

Use: IRRIGATION, MUNICIPAL, (circle), OTHER, (Specify) _____

DIRECTIONS: Mark an "x" in the Yes or No column and circle the word or phrase which applies. Use back of form to completely describe or explain condition as warranted from the responses below. Fill in all blanks, if unknown - enter unknown; or not applicable - enter N/A; if none - enter none.

		Yes	No
	1. Are the roads to the dam adequate to allow ACCESS by EMERGENCY EQUIPMENT and TRAVEL ACROSS the DAM (i.e., TRUCKS, AMBULANCES)?		X
*	2. Is there DEBRIS, TREES, or BRUSH on the upstream slope that prevent seeing the entire surface of the slope?		X
*	3. Are there TREES or BRUSH on the CREST, or on the DOWNSTREAM SLOPE that prevent seeing the entire surface?	X	
	4. Are there CRACKS, SLIDES, SLUMPS, BOILS, SETTLEMENT or OTHER on the UPSTREAM SLOPE, CREST, or DOWNSTREAM SLOPE?		X
*	5. Are there RODENT HOLES or ERODED GULLIES on the UPSTREAM or DOWNSTREAM SLOPE?	X	
	6. Is the upstream slope eroded from wave action?		
*	7. Is there FLOWING WATER or LARGE BOGGY SPOTS at the toe of the dam?	X	
	8. Are there FLOWS of WATER or WET SPOTS above the toe of the dam?	?	
	9. Is the riprap DISPLACED, BROKEN DOWN or MISSING?		X
	10. Are there toe drains? None shown on plans		X
	11. Is the water from the TOE DRAINS or LEAKS found to be MUDDY, SANDY, or carrying any material.	N/A	
	12. Are any of the concrete portions excessively CRACKED or SPALLED?		X
	13. Is the OUTLET CONTROL or GATE found to be STUCK, BROKEN, or EXCESSIVELY CORRODED?		X
	14. Is the outlet control easy to get to?	X	
	15. Is released water UNDERCUTTING the OUTLET or ERODING the EMBANKMENT.		X
	16. Does the spillway channel show significant EROSION, BACKCUTTING or DETERIORATION?		X
	17. Is the spillway obstructed with FLASHBOARDS, TREES, DEBRIS, BRUSH or OTHER material?		X
	18. Is there evidence that the dam has been overtopped?		X
	19. Are spillway WALLS, FLOOR, CONTROL SECTION, and ENERGY DISSIPATOR in POOR condition?	N/A	

-OVER-

	Yes	No
* 20. Is the outlet pipe BLOCKED, EXCESSIVELY CORRODED or in any other poor condition?	?	
21. Is the reservoir usually full YEAR ROUND, OVER ½ OF YEAR, or LESS THAN ½ OF YEAR?		
22. Should this dam be promptly inspected by a field engineer? (Explain why below)		X
23. Were photographs taken and forwarded to Cheyenne - State Engineer's Office?	X	

24. Additional Comments and Detailed Narrative Description of Problem Areas and follow-up Activities:

This dam is an embankment structure designed & built under the supervision of the SCS. The records of this office indicate that the present dam was built during 1952 & 1953. The dam is approximately 25' high (measured from the floor of the concrete stilling basin to the dam crest) and 300' long. The spillway is located opposite the dam on the South side of the lake. The spillway is excavated thru rock at the control section. The floor of the spillway is 35'-40' wide.

The upstream face of the dam is in good condition. The riprap is in good condition. No signs of wave erosion were observed. The water level was at the invert of the outlet pipe (± 21' below the crest) so the concrete inlet structure, trash rack, & gate could be observed. All were in good condition. Scattered rodent burrows & brushes were observed above the high water line (Items #2 & #5). Control as necessary.

SKETCH (Use to show problem areas with dam or related facilities):

The crest of the dam is about 15' wide. It is level & looks to be in good condition.

The downstream face of the dam is heavily overgrown with willows and other brush. It was difficult to inspect alot of the dam because of the vegetation. There appears to be some seepage at the toe of the dam during high reservoir levels. No seepage was observed during the inspection, because of the low water levels. Seepage ~~looks~~ may flow over the concrete stilling basin. Willows are heavy at this area.

There are numerous rodents on the downstream face. Burrows & holes were seen through-out the downstream face. There is a rock fill zone at the lower portion of the right ½ of the dam. Several large burrows were observed in this area. Some of the burrows have collapsed forming "sink holes" in the rock fill. Refer to Sketch.

There is a concrete stilling at the end of the pipe. The pipe looks to be in good condition. No problems were observed with the stilling basin. The handwheel on the gate is loose, but the nut is tight.

This dam is classified as a low hazard dam. Future analyses or development may indicate that another hazard classification is warranted.

Recommended Work

- Control willows + brush
- Control Rodents + fill burrows
- Monitor Seepage

Inspected By: Russell Dahlgren

Title: Asst. SOD Engineer

Sketch of Silver Lake
Permit No. 5769 Res
Inspected 8-13-92

Plan View of Dam
- Not to Scale

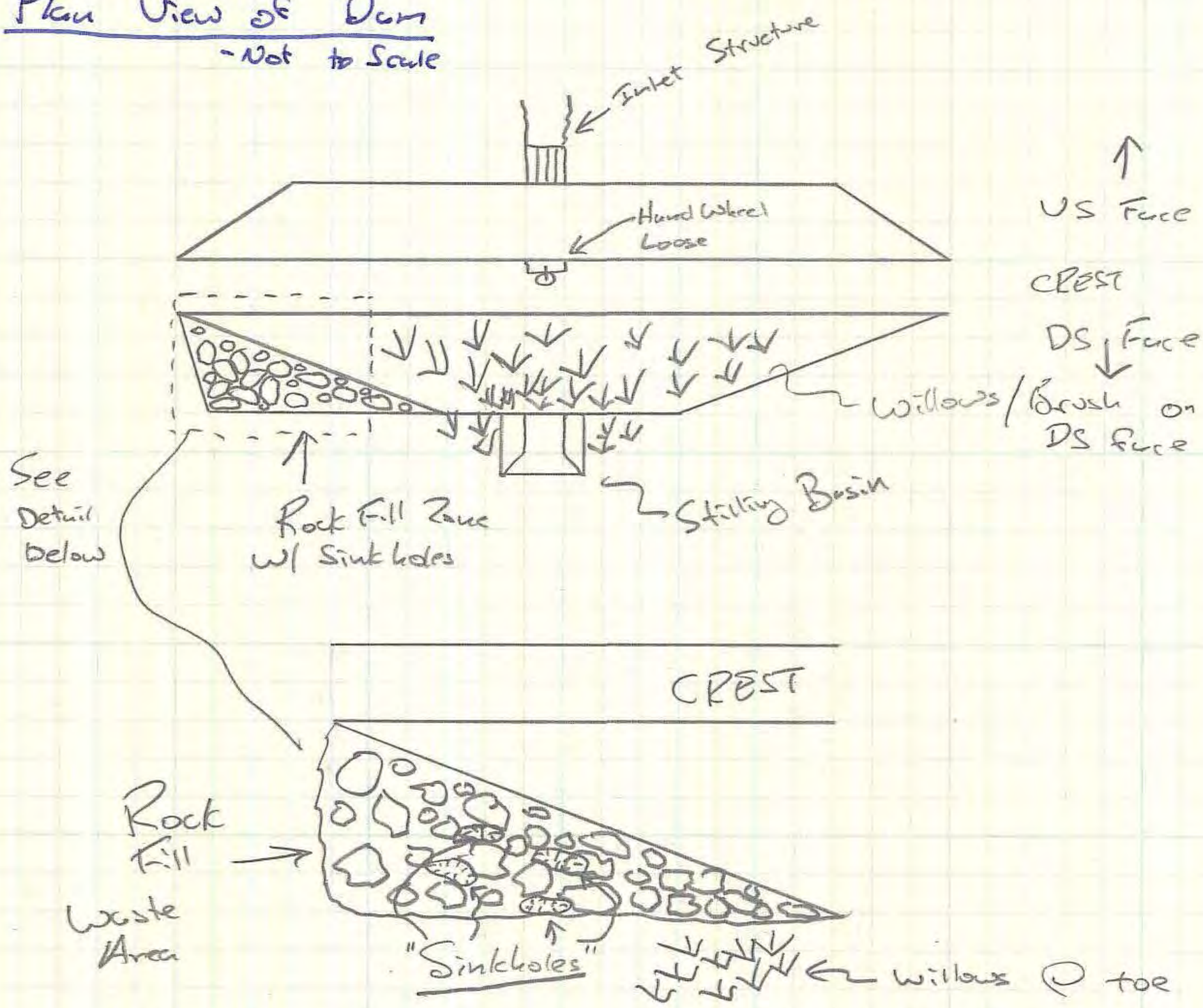

"Sinkholes" Formed by collapsed burrows within Rock Fill
Some burrows extend 3'-4' into Rock Fill
Sinkholes observed 3'x4'. Collapsed 12"-18"

Plan View of Lake
- Not to Scale

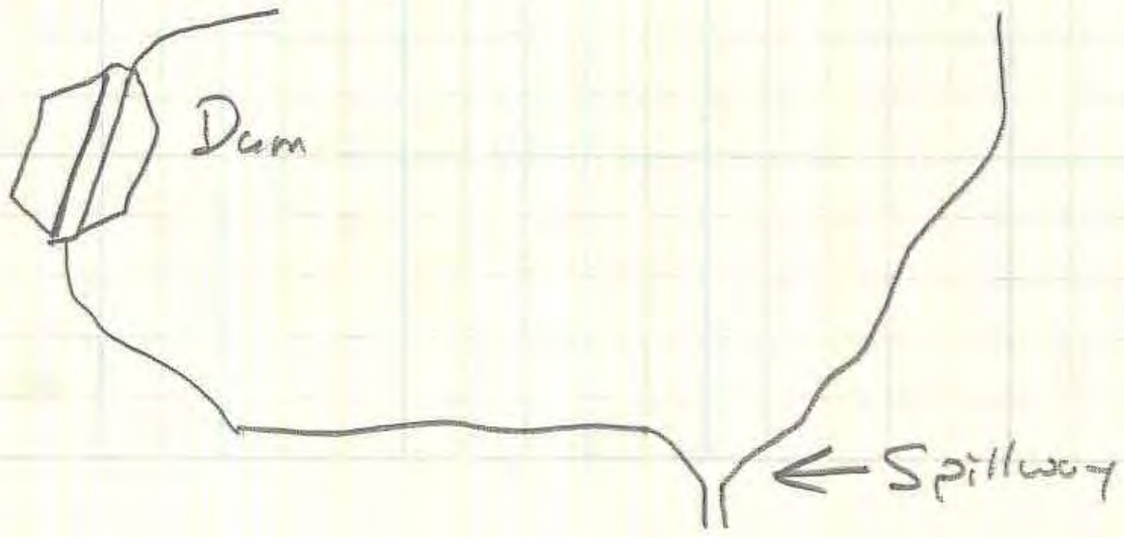

PINEDALE

RENAE

BRAGONJE

RENAE

LATE BUT NOT FORGOTTEN.

- RICH -

Pinedale R.D. Bridger-Teton N.F			
OCT 22 '93			
Route To	Ini	Act	Ins
Ranger			
Bus Mgt.			
Veg Mgt			
Rec/Lds.			
Air/Fish			

THE STATE OF WYOMING

MIKE SULLIVAN
GOVERNOR

GORDON W. FASSETT
STATE ENGINEER

State Engineer's Office

HERSCHLER BUILDING, 4-E
(307) 777-7354

CHEYENNE, WYOMING 82002-0370
FAX (307) 777-5451

August 21, 1992

Rich Kennedy, Engineer
Bridger-Teton National Forest
P.O. Box 1888
Jackson, WY 83001

RE: Dams on the B-T Forest

Dear Rich,

I certainly enjoyed myself last week. It was good to get to all the dams, inspect, and discuss their conditions with you. The purpose of this letter is to briefly summarize the conditions of the dams and provide a reference and basis for future analyses and "follow-up" work.

<u>Elkhorn Reservoir, aka Little Sandy Lake, SEO Permit No. 1025 RES</u>

This dam was inspected on August 10, 1992. It is located within the wilderness area. The dam is a composite rock fill/earth fill structure. A nearly vertical rock wall forms the downstream face of the dam and the earth fill portion forms the upstream section of the dam. The dam is 14' high and approximately 115' long. There is a timber crib type head gate with stop logs near the right abutment. The outlet is collapsed, but appears to have been a wooden structure. Logs were placed on the upstream face of the dam, perpendicular to the dam axis as riprap or protection from wave action. These logs are decayed and have been displaced.

There are "sinkholes" or depressions in the crest of the dam. There are trees growing on the embankment. You pointed out a feature that appeared to be a tension crack between the rock wall and the embankment portion of the dam near the center of the dam.

Approximately 30 cfs of seepage was flowing through the lower portion of the rock fill dam. The flow was clear with no obvious indications of transported material or piping. There are indications of seepage in the left groin of the dam and these flows may occur during higher reservoir water levels.

The spillway is located on the left side of the dam. It is a natural channel through a igneous/metamorphic outcrop that forms the left abutment of the dam. The spillway appears to be stable

with no indication of detrimental backcutting or erosion. There appears to be approximately 5' of freeboard at the lowest part of the spillway channel. However, the spillway is in-efficient and flows appear to be restricted. Some water may flow around the right end of the dam during high water.

The "safety" of the dam is difficult to evaluate, but the dam must be considered suspect. The "tension crack", sinkholes, trees on the embankment, excessive seepage, collapsed outlet and in-efficient spillway all are undesirable conditions. However, there are no real indications that the dam is in imminent danger of failing. But I wouldn't want to build my cabin right below it.

Unfortunately, we don't have a lot of knowledge concerning the history, past operation, or even the ownership of the dam. Enclosed are copies of the limited records in the SEO about the dam. I guess the first question that needs to be resolved is, "Who owns the dam?" Then we need to decide what to do with it.

Middle Piney Reservoir, SEO Permit No. 3878 RES

This dam was inspected on August 11, 1992. The dam is a "de facto" Forest Service owned facility. The present operation is that the outlet gate remains open and natural flows are passed through the reservoir. There is temporary storage when the run off exceeds the capacity of the outlet.

I will review and analyze the dam and reservoir and write a report with these analyses and my conclusions. At this time and with the current reservoir operation, I feel that the facility does not present any imminent threat to public safety.

Willow Lake Reservoir, SEO Permit No. 6257 RES

This dam was inspected on August 11, 1992. Stan Murdock, part owner of the reservoir, accompanied us. Of all the dams that were inspected last week, the Willow Lake Dam concerns me the most. Work is immediately necessary to remove the trash from the outlet, so that it can be operated and to construct a trash rack to prevent future problems. Erosion on the right half of the dam and adjacent to the outlet are also concerns. The "long-term" safety of the facility is questionable and major rehab may be necessary.

I understand that you will write a report describing the conditions that we observed during the visual inspection and advise the owners of what work needs to be done immediately (before this winter). I will review other conditions of the dam (hazard rating, hydrologic adequacy, and water rights) and advise the owners of what actions will be necessary to insure the long-term safety of the dam.

Divide Lake, SEO Permit No. 5365 RES

This dam was inspected on August 12, 1992. It is located within the wilderness area. It is a small earth dam, approximately 125' long and 10' high, with a timber crib outlet structure and slide gate. I understand that there is a new owner of this facility and that he is working to improve the dam to obtain a special use permit. Enclosed is a copy of my inspection report. Please advise the new owner of the dam safety concerns.

Silver Lake, SEO Permit No. 5769 RES

This dam was inspected on August 13, 1992. It is located within the wilderness area. It is an embankment dam designed by and built under the supervision of the SCS. There aren't any serious concerns with the dam, but maintenance work to clear the brush and willows from the dam and to control the rodents is necessary. The "sinkholes" in the rock fill section of the dam located below the right side of the dam should be monitored. These features appear to be caused by rodent burrows.

We weren't able to check much on the spillway (freeboard, slope, etc.) because of the distance between the dam and the spillway and the low reservoir water levels. The spillway control section is in a rock cut and no undesirable conditions were observed in this area. More detailed inspection of the spillway will require survey instruments.

Enclosed is a copy of my inspection report. Who are the owners of this dam?

Enclosed are copies of the permit maps from this office for all of these facilities, copies of water rights and ownership information, and my inspection reports. I know that a lot of the ownership information is out-of-date and I'll try to get things updated using the current Forest Service Special Use permit data.

Thanks again for all your help. If you want me to do anything else, please let me know.

Sincerely,

Russell Dahlgren

Russell Dahlgren
Asst. Safety of Dams Engineer

Enclosures
cc's: See Page Four

cc: John Barnes, Administrator Surface Water and Engineering
Loren Smith, Hydrographer-Commissioner
Bob Johnson, Water Commissioner

File ✓
USFS Intmt. Rep

Wyoming Dam Inspection Report

Name of Dam SILVER LAKE RESERVOIR Date 8/20/97

Permit No(s). 5769R Water Division # IV District # 7

Owner Name SILVER LAKE IRRIGATION

Address

County SUBLETTE Location (¼ ¼, lot or tract) NE NW W/IN WILDERNESS

Section 34 Township 33 Range 105

GPS - Latitude (DMS) 42° - 49' - 48" Longitude (DMS) 109° - 22' - 30"

Type of Dam (circle) EARTHFILL, ~~ROCKFILL, CONCRETE, OTHER~~

Hazard Rating LOW Dam Length 300' Crest Width 22'

Estimated Total Capacity AS PERMITTED Capacity from Plans 2151.63A-F

Estimated Height (hand leveled) 25' Height (from plans) 25'

Source (stream that dam located on and/or supplied from - including downstream tributaries)

OUTLET ON NORTH FORK SILVER Ck. SPILLWAY IS ON SILVER Ck.

Water Level - Feet Below ~~Principal Spillway~~ CREST 17' Feet Below Emergency Spillway

Estimated Spillway Width 40' Estimated Freeboard (spillway to top of dam) 5'

Size and Type of Outlet Pipe (metal, ~~concrete or plastic~~) 30" CMP

Use (circle) IRRIGATION, ~~MUNICIPAL, STOCK, OTHER~~

Directions: Mark an "X" in the yes or no column and circle the word or phrase which applies. Use the back of the form to completely describe or explain the conditions that warrant the response below. Fill in all blanks, unknown - enter "unknown"; or if not applicable - enter "N/A"; if none - enter "none".

EVALUATION CRITERIA	YES	NO
1) Are the roads to the dam adequate to allow ACCESS by EMMERGENCY EQUIPMENT and TRAVEL ACCROSS the DAM in the WINTER and SUMMER?		XXX
2) Is there DEBRIS, TREES or BRUSH on the upstream slope that prevent seeing the entire surface?		XXX
3) Are there TREES or BRUSH on the CREST or on the DOWNSTREAM SLOPE that prevent seeing the entire surface?	XXX	
4) Are there CRACKS, SLIDES, SLUMPS, BOILS, SETTLEMENT or OTHER on the UPSTREAM SLOPE, CREST or DOWNSTREAM SLOPE?		XXX
5) Are there RODENT HOLES or ERODED GULLIES on the UPSTREAM or DOWNSTREAM SLOPE?		XXX
6) Is the upstream slope eroded from wave action?		XXX
7) Is the rip rap DISPLACED, BROKEN DOWN or MISSING?		XXX
8) Is there FLOWING WATER or LARGE BOGGY SPOTS at the toe of the dam?		XXX
9) Are there FLOWS of WATER or WET SPOTS above the toe of the dam?		XXX
10) Are there toe drains?		XXX
11) Is the water from the TOE DRAINS or LEAKS found to be MUDDY, SANDY or CARRYING any material?		N/A
12) Are any concrete portions excessively CRACKED or SPALLED?		XXX

EVALUATION CRITERIA CONTINUED	YES	NO
13) Is the OUTLET CONTROL or GATE found to be STUCK, BROKEN or EXCESSIVELY CORRODED?		XXX
14) Is the outlet control easy to get to?	XXX	
15) Is the outlet pipe BLOCKED, EXCESSIVELY CORRODED or in any other poor condition?		XXX
16) Is the released water UNDERCUTTING the OUTLET or ERODING the EMBANKMENT?		XXX
17) Does the spillway channel show significant EROSION, BACKCUTTING or DETERIORATION?		XXX
18) Is the spillway obstructed with FLASH BOARDS, TREES, DEBRIS, BRUSH or OTHER material?		XXX
19) Is there evidence that the dam has been overtopped?		XXX
20) Are spillway WALLS, FLOOR, CONTROL SECTION or ENERGY DISSIPATOR in poor condition?		XXX
21) Is the reservoir usually full YEAR ROUND, OVER ½ OF YEAR or LESS THAN ½ OF YEAR?	XXX	
22) Should this dam be promptly inspected by an engineer from Cheyenne?		XXX
23) Were photographs taken and forwarded to the Cheyenne office?		XXX

Additional comments and detailed narrative description of problem areas and follow-up action:

SPILLWAY IS LOCATED SOME ¼ MILE SOUTH OF DAM ON SILVER Ck. DRAINAGE

VERY FEW SCATTERED RODENT HOLES ABOVE WATER LINE

DOWNSTREAM FACE IS HEAVILY OVERGROWN WITH BRUSH AND CONIFERS

THERE WAS ABOUT 8' OF STORAGE IN RES. AT INSPECT AND NO SEEPAGE WAS

OBSERVED ON DOWNSTREAM FACE OR AT TOE OF DAM

STRUCTURE IS IN VERY GOOD CONDITION

Sketch (use to show problem areas with the dam or related facilities)

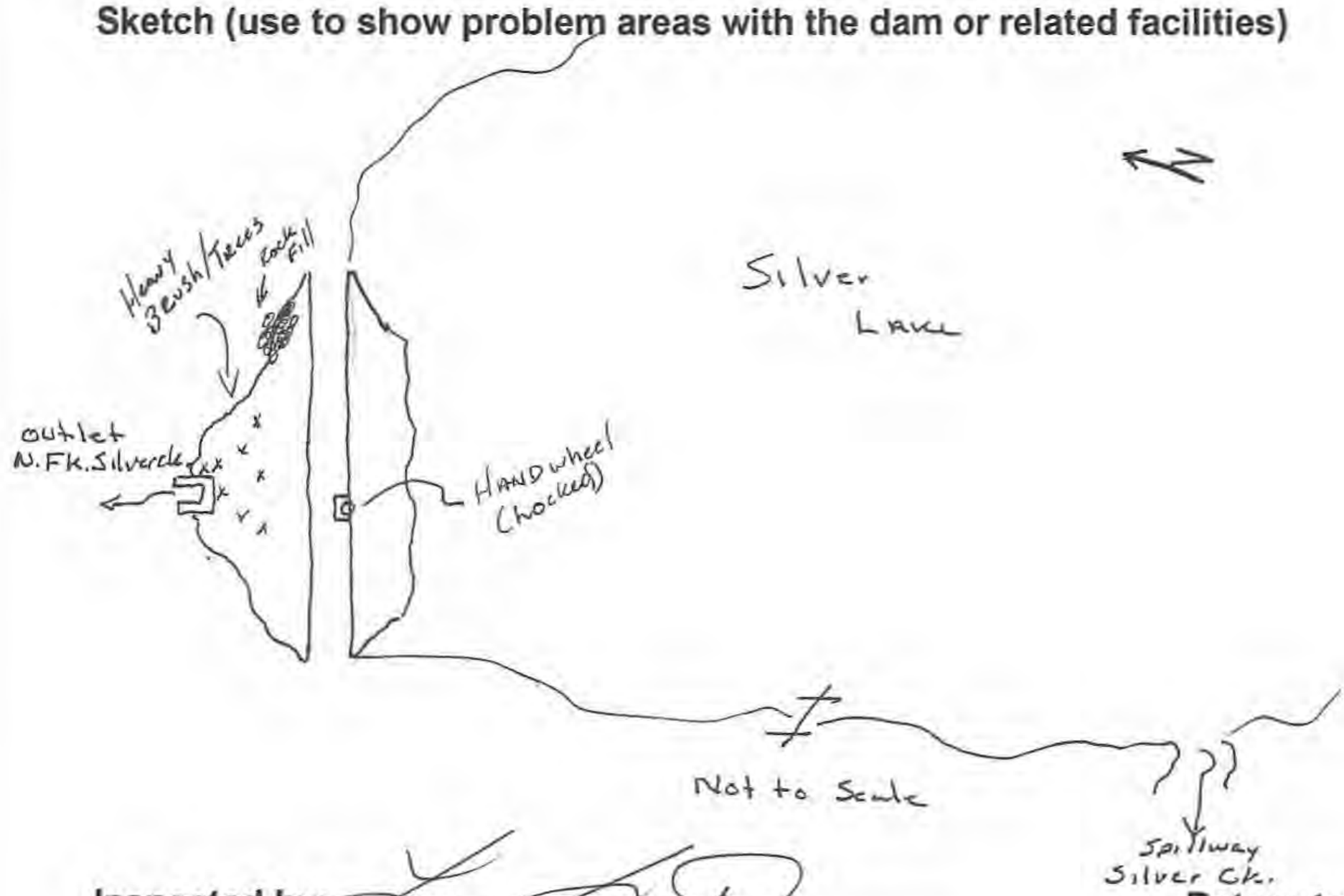

Inspected by: [signature]

Title: ASSISTANT-SUPERINTENDENT

Return to:
State Engineer's Office
Safety of Dams
Herschler Bldg. 4th Floor East
Cheyenne, WY 82002

Wyoming Dam Inspection Report

Date 24-Jul-03

Name of Dam SILVER LAKE RES Water Division # IV District 7

Permit No(s). 5769R County SUBLETTE

Owner Name SILVER LAKE IRRIGATION

Address ??

Location (1/4 1/4, lot or tract) NENW W/IN WILDERNESS Section 34 Twnsp 33 Range 105

GPS - Latitude (DMS) 42-49'-48" Longitude (DMS) 109-22'-30"

Type of Dam : EARTHFILL X ROCKFILL ____ CONCRETE ____ OTHER ____

Hazard Rating : High (1) ____ Significant(2) ____ Low (3) ____ Non Hazard(4) X

Height (From Plans) 25' Dam Length (From Plans) 280' Capacity (From Plans) 2151.63

(Actual) 25' (Actual) 300' (Estimated) SEE PERMIT

Freeboard (Spillway to Crest) 5' Crest Width 22' Emergency Spillway Width 40'

Outlet Pipe (Size and Type - CMP, STEEL, IRON, CONCRETE, PLASTIC) 30" CMP

Present Water Level (feet below CREST, PRINCIPAL or EMERGENCY SPILLWAY) 16'

Stream Name (Source of supply) SILVER CREEK

Use (circle) IRRIGATION, MUNICIPAL, STOCK OTHER IRRIGATION

RECEIVED DEC 8 2003 STATE ENGINEER CHEYENNE, WY

For each item below place an "X" in the yes or no column and circle the word or phrase which applies. Use the back the form to completely describe or explain the conditions that warrant the response below. Fill in all blanks, if unknown enter "UNKN"; if not applicaple - enter "N?A"; if none - enter "NONE".

EVALUATION CRITERIA	YES	NO
1) Are the roads to the dam adequate to allow YEAR ROUND ACCESS and TRAVEL ACROSS the dam by equipment for maintenance and/or repair?		X
2) Is there BRUSH, DEBRIS or OTHER on the upstream slope that inhibits visual inspection of the entire surface?	X	
3) Is there BRUSH, DEBRIS or OTHER on the CREST or DOWNSTREAM SLOPE that inhibits visual inspection of the entire surface?	X	
4) Are there trees growing on the CREST, UPSTREAM or DOWNSTREAM SLOPE of the embankement?	X	
5) Are there CRACKS, SLIDES, SLUMPS, SETTLEMENT or OTHER on the CREST UPSTREAM SLOPE, or DOWNSTREAM SLOPE?	X	
6) Are there RODENT HOLES or ERODED GULLIES on the UPSTREAM or DOWNSTREAM SLOPE?	X	
7) Is the upstream slope eroded from wave action?		X
8) Is the rip rap DISPLACED, BROKEN DOWN or MISSING ?		X
9) Are there FLOWS of WATER or WET AREAS above the toe of the dam?		X
10) Is there FLOWING WATER, SAND BOILS, or BOGGY AREAS at or below the toe of the dam?		X
11) Are there toe drains?		X
12) Is the water from any LEAKS, TOE DRAINS or in any BOGGY / WET AREAS found to be MUDDY, SANDY or CARRYING any material?		X
13) Is the outlet control easy to get to?	X	
14) Is the OUTLET CONTROL or GATE found to be STUCK, BROKEN or EXCESSIVELY CORRODED?	X	
15) Is the outlet pipe OBSTRUCTED, EXCESSIVELY CORRODED or in OTHERWISE POOR CONDITION?		X
16) Is the released water UNDERCUTTING the OUTLET or ERODING the EMBANKMENT?		X
17) Does the spillway channel show significant EROSION, BACKCUTTING or DETERIORATION?		X
18) Is the spillway obstructed with FLASH BOARDS, TREES, DEBRIS, BRUSH or OTHER material?	X	
19) Are spillway WALLS, FLOOR, CONTROL SECTION or ENERGY DISIPATOR in poor condition?		X
20) Are any concrete portions excessively CRACKED, SPALLED or DISPLACED?	X	
21) Is there evidence that the dam has been overtopped?		X
22) Is the reservoir usually full year round?		X
23) Do conditions warrant an inspection of this dam by an engineer?		X
24) Were photographs taken and forwarded to the Cheyenne office?	X	

Continued on reverse side of sheet

Additional comments and detailed narrative description of problem areas and follow-up action.

2. 3. & 4) BRUSH AND TREES ON UPSTREAM SLOPE, DOWNSTREAM SLOPE & CREST THAT NEED TO BE REMOVED.

5) SLUMPS AND SETTLEMENTS ON THE UPSTREAM SLOPE AND DOWNSTREAM SLOPE

6) RODENT HOLES AND GULLIES ON THE UPSTREAM SLOPE AND DOWNSTREAM SLOPE.

14) OUTLET GATE IS BROKEN

18)TREES AND BRUSH NEED TO BE REMOVED FROM THE EMERGENCY SPILLWAY

19) CONCRETE PORTIONS ON THE OUTLET GATE ARE CRACKED, SPALLED AND BROKEN.

24) PHOTO'S ALREADY IN CHEYENNE BY STATE ENGINEER.

RECEIVED
8 2003
STATE ENGINEER
CHEYENNE, WY

Sketch (use to show problem area with the dam or related facilities)

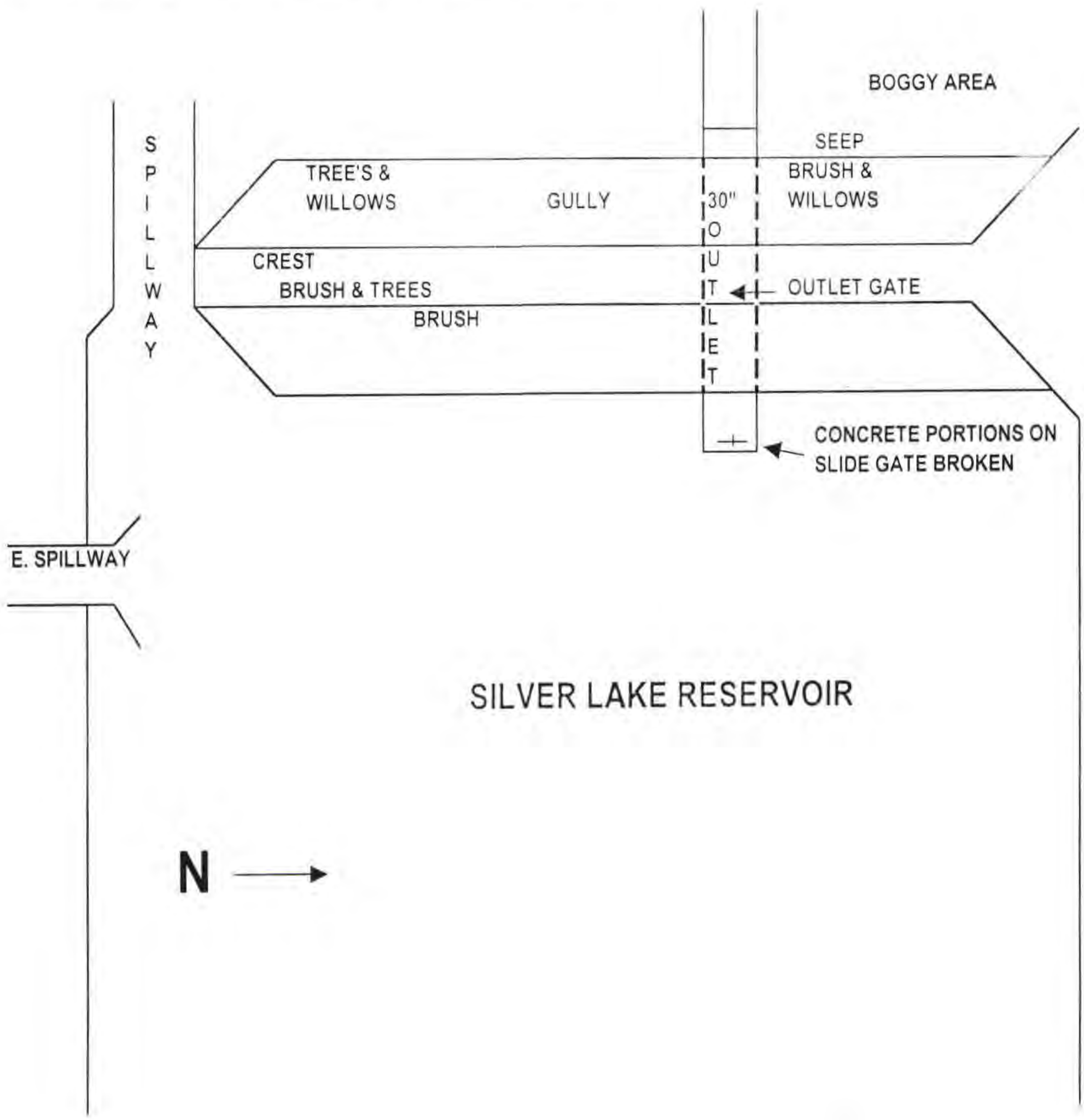

Inspected by: KEVIN WILDE
PAT TYRRELL & JOHN YARBROUGH

Title: LEAD HYRDOGRAPHER/COMMISSIONER

Return to:
State Engineer's Office
Safety of Dams
Herschler Bldg. 4th Floor East
Cheyenne, WY 82002

Wyoming Dam Inspection Report

SCANNED

Date 7-15-09

Name of Dam Enl. Silver Lake Reservoir Water Division # IV District # 7

Permit No(s). 5769 R County Sublette

Owner Name Silver Lake Irrigation

Address ?? NW NW

Location (¼ ¼, lot or tract) NE NW Section 34 Twnsp 33 Range 105

GPS - Latitude (DMS) N 42° 47' 42.8" ✓ Longitude (DMS) W 109° 23' 4.6" Elev. 9969

Type of Dam : EARTHFILL X ROCKFILL ____ CONCRETE ____ OTHER ____

Hazard Rating : High (1) ____ Significant(2) ____ Low (3) X Non Hazard(4) ____

Dam Height (From Plans) 25' Dam Length (From Plans) 280' Capacity (From Plans) 215.63

(Actual) 25' (Actual) 300' (Estimated) See permit

Freeboard (Spillway to Crest) 5' Crest Width 22' Emergency Spillway Width 40'

Outlet Pipe (Size and Type - CMP, STEEL, IRON, CONCRETE, PLASTIC) 16"

Present Water Level (feet below CREST, PRINCIPAL or EMERGENCY SPILLWAY) 5' 7"

Stream Name (Source of supply) Silver Creek

Use (circle) IRRIGATION, MUNICIPAL, STOCK, OTHER ____

For each item below place an "X" in the yes or no column and circle the word or phrase which applies. Use the back of the form to completely describe or explain the conditions that warrant the response below. Fill in all blanks, if unknown enter "UNKN"; if not applicable - enter "N/A"; if none - enter "NONE".

	EVALUATION CRITERIA	YES	NO
1)	Are the roads to the dam adequate to allow YEAR ROUND ACCESS and TRAVEL ACROSS the dam by equipment for maintenance and/or repair?		X
2)	Is there BRUSH, DEBRIS or OTHER on the upstream slope that inhibits visual inspection of the entire surface?	X	
3)	Is there BRUSH, DEBRIS or OTHER on the CREST or DOWNSTREAM SLOPE that inhibits visual inspection of the entire surface?	X	
4)	Are there trees growing on the CREST, UPSTREAM or DOWNSTREAM SLOPE of the embankment?	X	
5)	Are there CRACKS, SLIDES, SLUMPS, SETTLEMENT or OTHER on the CREST, UPSTREAM SLOPE, or DOWNSTREAM SLOPE?	X	
6)	Are there RODENT HOLES or ERODED GULLIES on the UPSTREAM or DOWNSTREAM SLOPE?	X	
7)	Is the upstream slope eroded from wave action?		X
8)	Is the rip rap DISPLACED, BROKEN DOWN or MISSING?		X
9)	Are there FLOWS of WATER or WET AREAS above the toe of the dam?		X
10)	Is there FLOWING WATER, SAND BOILS or BOGGY AREAS at or below the toe of the dam?		X
11)	Are there toe drains?		X
12)	Is the water from any LEAKS, TOE DRAINS or in any BOGGY / WET AREAS found to be MUDDY, SANDY or CARRYING any material?		X
13)	Is the outlet control easy to get to?	X	
14)	Is the OUTLET CONTROL or GATE found to be STUCK, BROKEN or EXCESSIVELY CORRODED?		X
15)	Is the outlet pipe OBSTRUCTED, EXCESSIVELY CORRODED or in OTHERWISE POOR CONDITION?		X
16)	Is the released water UNDERCUTTING the OUTLET or ERODING the EMBANKMENT?		X
17)	Does the spillway channel show significant EROSION, BACKCUTTING or DETERIORATION?		X
18)	Is the spillway obstructed with FLASH BOARDS, TREES, DEBRIS, BRUSH or OTHER material?	X	
19)	Are spillway WALLS, FLOOR, CONTROL SECTION or ENERGY DISSIPATER in poor condition?		X
20)	Are any concrete portions excessively CRACKED, SPALLED or DISPLACED?	X	
21)	Is there evidence that the dam has been overtopped?		X
22)	Is the reservoir usually full year round?		X
23)	Do conditions warrant an inspection of this dam by an engineer?		X
24)	Were photographs taken and forwarded to the Cheyenne office?		X

Continued on reverse side of sheet

SCANNED

Additional comments and detailed narrative description of problem areas and follow-up action:

2, 3, 4) Brush and trees on upstream slope, downstream slope and crest that need to be removed.

18. Trees and brush need to be removed from emergency spillway.

19. Concrete portions on the outlet gate are cracked, spalled, and broken.

N 10° 7' W

N 1/4 cor sec 3

Sketch (use to show problem areas with the dam or related facilities)

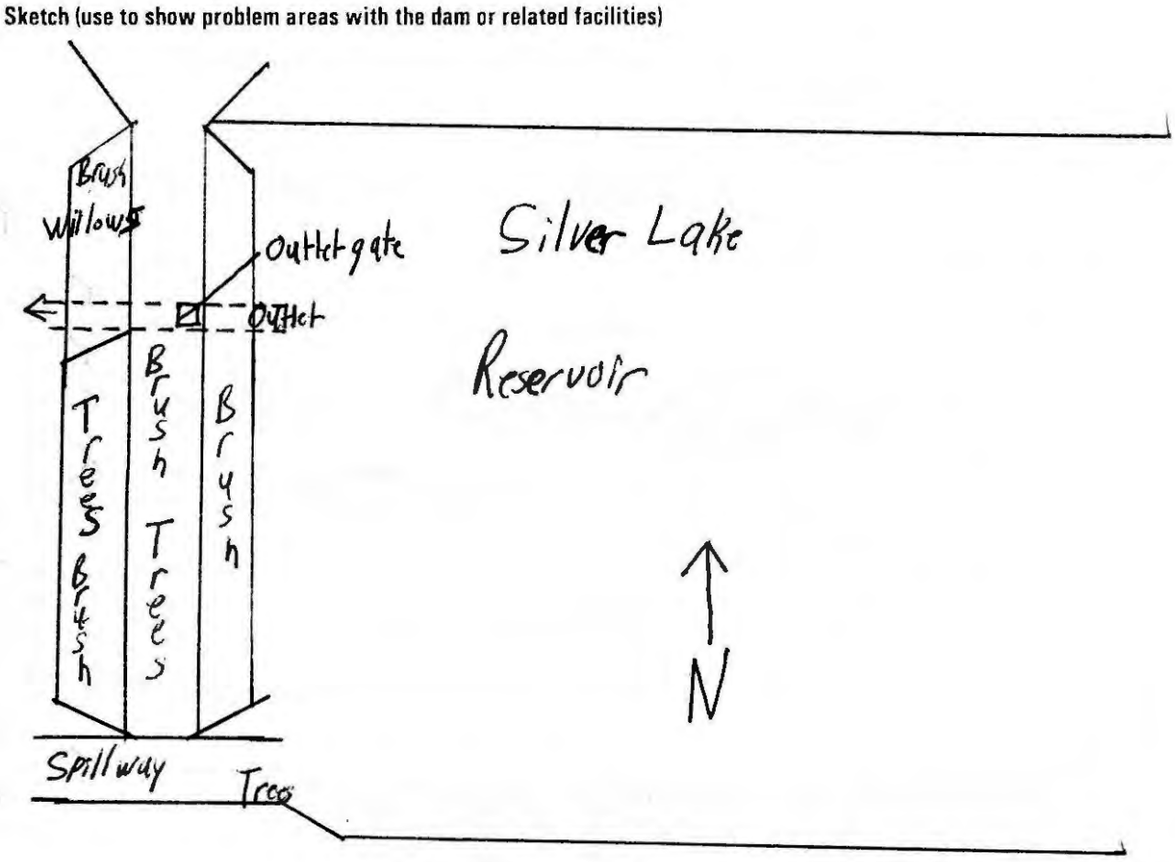

Inspected by: Kevin Payne

Title: Assistant Superintendent

Return to:
State Engineer's Office
Safety of Dams
Herschler Bldg. 4th Floor East
Cheyenne, WY 82002

Wyoming Dam Inspection Report

SCANNED FEB 02 2015

Date: September 17, 2014

Name of Dam Silver Lake Reservoir Water Division # IV District # 7

Permit No(s). 5769 Res County Sublette

Owner Name Silver Lake Irrigation District

Address

Location (¼ ¼, lot or tract) NENW Section 34 Twnsp 33N Rge 105 Unsurveyed

GPS - Latitude (DMS) 42°47.705' Longitude (DMS) -109°23.112'

Type of Dam : EARTHFILL X ROCKFILL ____ CONCRETE ____ OTHER ____

Hazard Rating : High (1) ____ Significant(2) ____ Low (3) X Non Hazard(4) ____

Height (From Plans) 25' Dam Length (From Plans) 280' Capacity (From Plans) 2151
(Actual) 25' (Actual) 282' (Estimated) 21151

Freeboard (Spillway to Crest) 5' Crest Width 14' Emergency Spillway Width 40'@S. Fork Silver Cr

Outlet Pipe (Size and Type - CMP, STEEL, IRON, CONCRETE, PLASTIC) 16"

Present Water Level (feet below CREST, PRINCIPAL or EMERGENCY SPILLWAY) 24'

Stream Name (Source of supply) Silver Creek
Use (circle) IRRIGATION, MUNICIPAL, STOCK, OTHER CA - POOR NJG 10.17.14

For each item below place an "X" in the yes or no column and circle the word or phrase which applies. Use the back of the form to completely describe or explain the conditions that warrant the response below. Fill in all blanks, if unknown enter "UNKN"; if not applicable - enter "N/A"; if none - enter "NONE".

EVALUATION CRITERIA	YES	NO
1) Are the roads to the dam adequate to allow YEAR ROUND ACCESS and TRAVEL ACROSS the dam by equipment for maintenance and/or repair?		
2) Is there BRUSH, DEBRIS or OTHER on the upstream slope that inhibits visual inspection of the entire surface?		
3) Is there BRUSH, DEBRIS or OTHER on the CREST or DOWNSTREAM SLOPE that inhibits visual inspection of the entire surface?		
4) Are there trees growing on the CREST, UPSTREAM or DOWNSTREAM SLOPE of the embankment?		
5) Are there CRACKS, SLIDES, SLUMPS, SETTLEMENT or OTHER on the CREST UPSTREAM SLOPE, or DOWNSTREAM SLOPE?		X
6) Are there RODENT HOLES or ERODED GULLIES on the UPSTREAM or DOWNSTREAM SLOPE?		
7) Is the upstream slope eroded from wave action?		X
8) Is the rip rap DISPLACED, BROKEN DOWN or MISSING?		X
9) Are there toe drains?		X
10) Is there FLOWING WATER, SAND BOILS or BOGGY AREAS at or below the toe of the dam?		X
11) Are there FLOWS of WATER or WET AREAS above the toe of the dam?		X
12) Is the water from any LEAKS, TOE DRAINS or in any BOGGY / WET AREAS found to be MUDDY, SANDY or CARRYING any material?		X
13) Is the outlet control easy to get to?	X	
14) Is the OUTLET CONTROL or GATE found to be STUCK, BROKEN or EXCESSIVELY CORRODED?		X
15) Is the outlet pipe OBSTRUCTED, EXCESSIVELY CORRODED or in OTHERWISE POOR CONDITION?		X
16) Is the released water UNDERCUTTING the OUTLET or ERODING the EMBANKMENT?		X
17) Does the spillway channel show significant EROSION, BACKCUTTING or DETERIORATION?		X
18) Is the spillway obstructed with FLASH BOARDS, TREES, DEBRIS, BRUSH or OTHER material?		X
19) Are spillway WALLS, FLOOR, CONTROL SECTION or ENERGY DISSIPATER in poor condition?		X
20) Are any concrete portions excessively CRACKED, SPALLED or DISPLACED?		
21) Is there evidence that the dam has been overtopped?		X
22) Is the reservoir usually full year round?		X
23) Do conditions warrant an inspection of this dam by an engineer?		X
24) Were photographs taken and forwarded to the Cheyenne office?		X

Continued on reverse side of sheet

Additional comments and detailed narrative description of problem areas and follow-up action:

2, 3, & 4.) See pictures of trees and brush.

20.) Inlet structure concrete is displace- see picture.

Reservoir Crest.

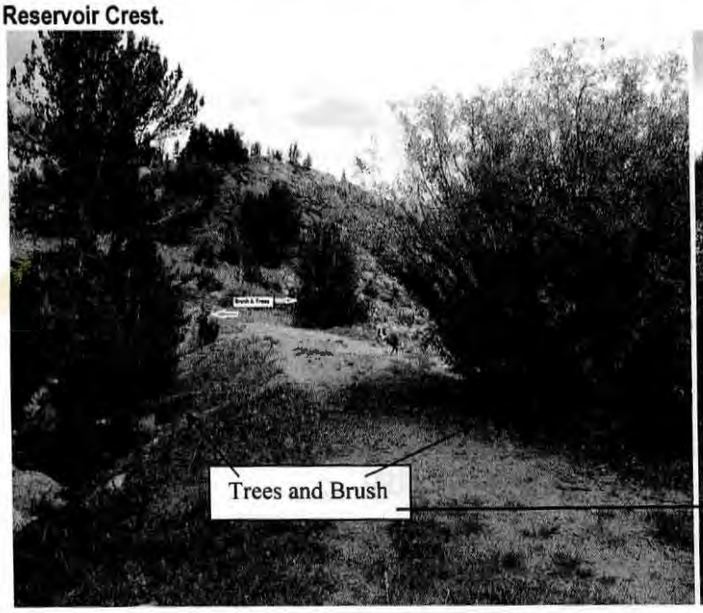

Outlet structure.

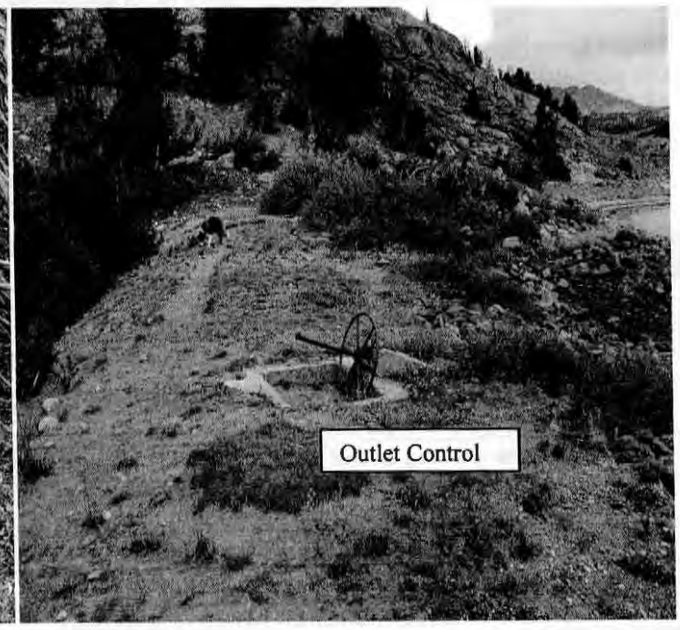

Invert Structure and Trash Rack

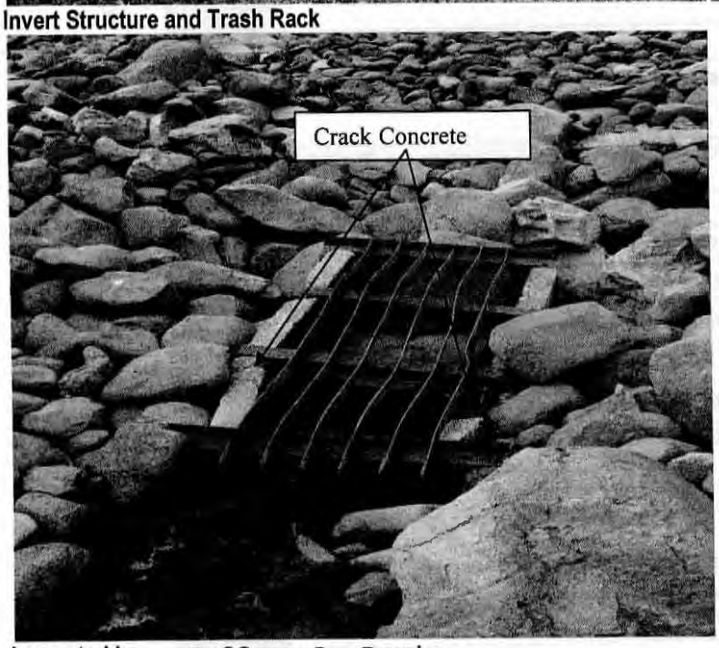

Inspected by: Jeffrey L. Davis

Title: Hydrographer - Commissioner

Return to:
State Engineer's Office
Safety of Dams
Herschler Bldg. 4th Floor East
Cheyenne, WY 82002

RECEIVED
OCT 16 2014
STATE ENGINEERS
CHEYENNE, WYOMING

ATTACHMENT G

SPECIAL USE PERMITS

Form 964.
(Revised Nov., 1916.)

UNITED STATES DEPARTMENT OF AGRICULTURE
FOREST SERVICE

L REPORT ON APPLICATIONS FOR SPECIAL-USE PERMITS AND RIGHTS OF WAY

Uses-Wyoming,
Silver Lake Reservoir Co.,
~~Reservoirs. 1-1-28.~~
(Case designation.)

(This outline should be returned with report. Head all reports with full case designation.)

1. Applicant:
Name and address; if corporation or association, name and address of representative.

2. Kind of permit and intended use:
As reservoir, stating approximate area and capacity; conduit, length and size; hotel or residence, size and kind of construction; power, irrigation, summer home; if pasture, drift fence or corral, state whether applicant has grazing permit and for what number of stock, also whether other lands are inclosed and number of acres; state what use is to be made of proposed structure.

3. Location, and status of land affected:
If no map is filed with application, sketch map should be made on Form 878 if required by Supervisor; status should be shown on map when one is made, also any claims or improvements; terminal points of roads and trails should be given.

4. Character of land:
General description, with discussion of adaptability for proposed use.

5. Timber:
State approximate amount and kinds of timber which will be destroyed; what charge should be made for it. If large amount of timber will be destroyed it may be scaled later as directed by Supervisor.

6. Conditions in permit:
State fully with reasons therefor, if not apparent, with reference to character of structures, sanitation, care with fire, etc. Bond required in sawmill cases, not usual in others; if recommended, give reasons and amount; time for beginning and completing construction; what annual rental; no charge made for easements.

7. Other remarks:
State any facts of which you have knowledge which might affect granting of permit or future use of the land.

8. Date of examination:

9. Recommendations:

March 13, 1928.
(Date.)

E. E. McLa
(Signature.)

Senior Forest Ranger.
(Title.)

Approved, ..., **192**

(Signature.)

(Title.)

NOTE.—Number paragraphs as in outline; repeat only main headings. The subheadings are intended to be suggestive and are not exhaustive of the points which should be discussed. The discussion under each heading should be full and appropriate to the case under consideration.

GOVERNMENT PRINTING OFFICE 8—552

Form 832
(Revised Feb., 1921)

BILLINGS
BRIDGER
NATIONAL FOREST
11-16-28

SPECIAL USE PERMIT

L
Uses-Wyoming
Silver Lake Reservoir Co.
Reservoir, 1/1/28

(Case designation)

Permission is hereby granted to Silver Lake Reservoir Co., E. P. Steele, Pres.

of Boulder, Wyo.

to use the following-described lands: Silver Lake, Secs 26, 27, 34 & 35, T. 32 N.
(Describe the lands to be occupied, if unsurveyed, by metes and bounds, with reference to a road or
R. 105 W., 6 P. M. & Wolf Lake, S½ of Sec. 6 and N½ of Sec. 7, T.
stream or well-known landmark; right of way by terminal points, direction, and lands occupied)

52 N., R. 105 W., 6 P. M.

for the purpose of constructing a reservoir at each location shown above
(Briefly but clearly describe the use, giving area of inclosures, length and width of right of way, etc.)

with approximately 1219.11 acre feet storage capacity for Silver

Lake & 462.82 for Wolf Lake. Area to be flooded consists of approx.
subject to the following conditions: 64.58 acres.

1. The permittee shall pay to the Free. Bank of

(United States Depository), to be

placed to the credit of the Treasurer of the United States, in consideration for this use, the sum of

dollars ($) for the period

from, 19, to December 31, 19, and thereafter annually,

on January 1, dollars ($).

2. The permittee shall comply with the regulations of the Department of Agriculture governing the National Forest, shall observe all sanitary laws and regulations applicable to the premises, and shall keep the premises in a neat and orderly condition and dispose of all refuse and locate outhouses and cesspools as required by the Forest officers.

3. This permit is subject to all valid claims.

4. The permittee shall take all reasonable precaution to prevent and suppress forest fires.

8—713

5. The permittee, if engaged in business, shall conduct same in an orderly manner and in accordance with all requirements of the laws of the State of Wyoming, as well as the laws of the United States.

6. The permittee shall pay the United States for any damage to its property resulting from this use.

7. The permittee shall fully repair all damage, other than ordinary wear and tear, to roads and trails in the National Forests caused by the permittee in the exercise of the privilege granted by this permit.

8. Construction work (or occupancy and use) under this permit shall begin within three months, be completed within three years from the date of the permit, and this use shall be actually exercised at least during irrigation season days each year, unless the time is extended or shortened.

9. In case of change of address, permittee shall immediately notify the Forest Supervisor.

10. The charges for this use may be readjusted whenever necessary to place this permit on a basis consistent with the charge to other permittees for like privileges. A general readjustment will be made at the end of five years from the date of issuance of permit and at the end of each five-year period thereafter.

11. No National Forest timber may be cut or destroyed without first obtaining a permit from the Forest Supervisor.

12. Upon the abandonment, termination, or revocation of this permit, and in the absence of an agreement to the contrary, the permittee, if all the rental charges due the Government have been paid, may, within a reasonable period to be determined by the issuing officer, remove all structures which have been placed on the premises by him, except where the material was furnished by the Forest Service, but upon failure to remove the structures within that period they shall become the property of the United States.

13. This permit may be transferred with the approval of the officer by whom it was given or his successor, subject to such conditions as may be imposed at the time of transfer. It shall terminate upon breach of any of the conditions herein or at the discretion of the District Forester or the Forester.

14. The permittee shall provide, whenever requested by the Forest officers, a way across the land covered by this permit for the free ingress or egress of Forest officers and for users of National Forest land and purchasers of National Forest products.

15. No debris will be allowed to collect at the dams.
(Special stipulations necessary)

16. The permittees agree to tear out the dams and remove all traces of them at any time they may abandon their use, or if this permit should be revoked for any reason.

April 13, 1928
(Date)

(Signature of officer issuing permit)

Acting Forest Supervisor
(Title)

S—713 GOVERNMENT PRINTING OFFICE

Form 832
(Revised Nov. 1933)

FOREST SERVICE
WYOMING
NATIONAL FOREST
Approved 3-14-40
Answered

SPECIAL USE PERMIT

U
USES - Wyoming
Silver Lake Reservoir Co.
3/11/40

(Case designation)

Permission is hereby granted to - Silver Lake Reservoir Co., E.P. Steele, President

of Boulder, Wyoming

to use the following-described lands: To use lands at the outlet of Silver Lake which is
(Describe the lands to be occupied, if unsurveyed, by metes and bounds, with reference to a road or
located in Sections 26, 27, 34 and 35; Township 33 North, Range 105 West of the
stream or well-known landmark; right of way by terminal points, direction, and lands occupied)
6th P.M., for the

for the purpose of maintaining a dam and dam structures that have been completed; and
(Briefly but clearly describe the purpose, giving nature of improvements, length and width if right of way, etc.)
to maintain the level of the lake during storage periods at a level not in excess of that to which it has been maintained since 1923; with the further provision that no additional construction work will be performed to facilitate further lowering or raising of the level of the lake until a new permit has been obtained.

subject to the following conditions:

1. The permittee shall pay to the Regional Fiscal Agent designated by the Forest officer for deposit to the credit of the Treasurer of the United States, in consideration for this use, the sum of No Charge dollars ($_____) for the period from _____, 19____, to December 31, 19____, and thereafter annually, on January 1, _____ dollars ($_____).

2. The permittee shall comply with the regulations of the Department of Agriculture governing the National Forest, shall observe all sanitary laws and regulations applicable to the premises, and shall keep the premises in a neat and orderly condition and dispose of all refuse and locate outhouses and cesspools as required by the Forest officers.

3. This permit is subject to all valid claims.

4. The permittee shall take all reasonable precaution to prevent and suppress forest fires.

8—713

5. The permittee, if engaged in business, shall conduct same in an orderly manner and in accordance with all requirements of the laws of the State of Wyoming, as well as the laws of the United States.

6. The permittee shall pay the United States for any damage to its property resulting from this use.

7. The permittee shall fully repair all damage, other than ordinary wear and tear, to roads and trails in the National Forests caused by the permittee in the exercise of the privilege granted by this permit.

8. Construction work (or occupancy and use) under this permit shall begin within ..... months, be completed within ..... years from the date of the permit, and this use shall be actually exercised at least during irrigation season days each year, unless the time is extended or shortened.

9. In case of change of address, permittee shall immediately notify the Forest Supervisor.

10. The charges for this use may be readjusted whenever necessary to place this permit on a basis consistent with the charge to other permittees for like privileges. A general readjustment will be made at the end of five years from the date of issuance of permit and at the end of each five-year period thereafter.

11. No National Forest timber may be cut or destroyed without first obtaining a permit from the Forest Supervisor.

12. Upon the abandonment, termination, or revocation of this permit, and in the absence of an agreement to the contrary, the permittee, if all the rental charges due the Government have been paid, may, within a reasonable period to be determined by the issuing officer, remove all structures which have been placed on the premises by him, except where the material was furnished by the Forest Service, but upon failure to remove the structures within that period they shall become the property of the United States.

13. This permit may be transferred with the approval of the officer by whom it was given or his successor, subject to such conditions as may be imposed at the time of transfer. It shall terminate upon breach of any of the conditions herein or at the discretion of the Regional Forester or the Forester.

14. The permittee shall provide, whenever requested by the Forest officers, a way across the land covered by this permit for the free ingress or egress of Forest officers and for users of National Forest land and purchasers of National Forest products.

15. The permittee will keep the area flooded through the construction of this dam free of all dead and down timber (Special stipulations necessary) and no debris or drift wood shall be allowed to collect in or on the face of the dam.

16. The permittee shall comply with the regulations of the Department of Agriculture governing the national forest, shall observe all sanitary laws and regulations applicable to the premises, and shall keep the premises in such neat and sanitary condition as the local Forest Officer may require.

17. No material maintenance improvements of any character shall be placed under this permit until the Forest Supervisor has approved, in writing, the plans and specifications for such work, and upon the completion of the work the completed structures and area used in placing structures shall be placed in such good workmanlike condition as will meet the approval of the local forest officer in charge.

18. Any borrow pits used in securing dirt or rock materials for dam construction purposes or for maintenance purposes in the future shall be smoothed over and left in such a manner as not to be conspicuous or unsightly.

March 11, 1940
(Date)

CARL B. ARENTSON
(Signature of officer issuing permit)

Forest Supervisor
(Title)

8—713 U.S. GOVERNMENT PRINTING OFFICE

Form 964
(Revised May, 1929)

UNITED STATES DEPARTMENT OF AGRICULTURE
FOREST SERVICE

REPORT ON APPLICATIONS FOR SPECIAL-USE PERMITS AND RIGHTS OF WAY

U
USES - Bridger
Silver Lake ~~Reservoir Co.~~ Irrigation Co.
Reservoir, 1/1/28
(Case designation)

1946
(Date of examination)

1. Applicant:
Name and address; if corporation or association, name and address of representative.

Silver Lake ~~Reservoir~~ Irrigation Company, Jim King, Secretary, Boulder, Wyoming

2. Kind of permit and intended use:
As reservoir, stating approximate area and capacity; conduit, length, and size; hotel or residence, size and kind of construction; power, irrigation, summer home; if pasture, drift fence or corral, state whether applicant has grazing permit and for what number of stock, also whether other lands are inclosed and number of acres; state what use is to be made of proposed structure. The members of this company request permission to reconstruct the p present dam and raise it to a height of eighteen (18) feet which is expected to increase the storage capacity of Silver Lake to 2,152 acre feet. Raising the dam to this height will provide additional storage capacity and enable them to take advantage of a natural spillway about 300 feet south of the dam. Their present plans contemplate a dirt dam with concrete core and rock rip-rapped front. Rock to be hand placed.

3. Location, and status of land affected:
If no map is filed with application, sketch map should be made on Form 878 if required by Supervisor; status should be shown on map when one is made, also any claims or improvements; terminal points of roads and trails should be given.
There are no road or trail terminal points affected and this company now has a special use permit covering the same type of use.

4. Character of land:
General description, with discussion of adaptability for proposed use.

This is one of the few lakes which is excellently adapted to the proposed use. The approach to the shoreline is gentle on all sides and is free of timber. While this lake is used considerably for fishing the scenic values involved are negligable.

5. Timber:
State approximate amount and kinds of timber which will be destroyed; what charge should be made for it. If large amount of timber will be destroyed it may be scaled later as directed by Supervisor.

No timber will be destroyed.

8—552

6. Conditions in permit:

State fully with reasons therefor, if not apparent, with reference to character of structures, sanitation, care with fire, etc. Bond required in sawmill cases, not usual in others; if recommended, give reasons and amount; time for beginning and completing construction; what annual rental; no charge made for easements.

Plans of the proposed structure are being worked out by the company's engineer and will be submitted for inspection shortly. The company plans on starting this project at an early date this spring if approval is given. I believe that they should be given one year from May 15, 1947 to complete the job.
No charges recommended in this case.

7. Other remarks:

State any facts of which you have knowledge which might affect granting of permit or future use of the land.

The old dam has become prectically unservicable and a properly constructed new dam would greatly improve the appearance of the area.

8. Recommendations:

I recommend that this permit be granted.

2/26/47
(Date)

L. Edwin Lazier
(Signature)

Forester (D.F. R.)
(Title)

Approved, 3/31, 1950

H. H. Rousseau
(Signature)

Forest Supervisor
(Title)

NOTE.—The subheadings are intended to be suggestive and are not exhaustive of the points which should be discussed. The discussion under each heading should be full and appropriate to the case under consideration. If this form does not provide sufficient space, additional sheets may be used and attached to this form.

U. S. GOVERNMENT PRINTING OFFICE 8—552

Case Designation:

U
U3IS - Bridger
Silver Lake Irrigation ~~Company~~ District
Reservoir, 11/27/46

SPECIAL USE PERMIT

Bridger National Forest.

Permission is hereby granted to Silver Lake Irrigation ~~Company~~ District

of Boulder, Wyoming,

hereinafter called the permittee, to use, subject to the conditions set out below, the following-described lands or improvements:

A portion of unsurveyed sections 27 and 34, T 33 N, R 105 W, also a portion of unsurveyed sections 5 and 8, T 32 N, R 105 W, and the old wagon road from Pocket Creek to Silver Lake.

This permit covers 200 acres and/or 8 miles for the purpose of:

Transporting supplies and material for reconstructing a surface water reservoir. The operation and maintenance of the reservoir will be accomplished by horse travel.

The exercise of any of the privileges granted in this permit constitutes acceptance of all the conditions of this permit.

1. In consideration for this use, the permittee shall deposit with the Regional Fiscal Agent, Forest Service, No charge, Reg. U - 11g - Irrigation, a check, draft, or money order made payable to the Treasurer of the United States in the sum of _____ dollars ($_____) for the period from _____, 19____, to _____, 19____, and thereafter annually on _____, _____ dollars ($_____). The charges for this use may be readjusted from time to time to place this permit on a basis consistent with the charge to other permittees for like privileges.

Form FS-832
(Revised 12-1-49)

16—38077-8

2. Construction or occupancy and use under this permit shall begin within 3 months, and construction, if any, shall be completed within 24 months, from the date of the permit. This use shall be actually exercised at least 365 days each year, unless otherwise authorized in writing.

3. Development plans; lay-out plans; construction, reconstruction, or alteration of improvements; or revision of lay-out or construction plans for this area must be approved in advance and in writing by the forest supervisor. Trees or shrubbery on the permitted area may be removed or destroyed only after the forest officer in charge has approved, and has marked or otherwise designated that which may be removed or destroyed. Merchantable timber cut must be paid for by the permittee. Trees, shrubs, and other plants may be planted in such manner and in such places about the premises as may be approved by the forest officer in charge.

4. The permittee shall maintain the improvements and premises to standards of repair, orderliness, neatness, sanitation, and safety acceptable to the forest officer in charge.

5. This permit is subject to all valid claims.

6. The permittee, in exercising the privileges granted by this permit, shall comply with the regulations of the Department of Agriculture and all Federal, State, county, and municipal laws, ordinances, or regulations which are applicable to the area or operations covered by this permit.

7. The permittee shall take all reasonable precautions to prevent and suppress forest fires. No material shall be disposed of by burning in open fires during the closed season established by law or regulation without a written permit from the forest officer in charge or his authorized agent.

8. The permittee shall exercise diligence in protecting from damage the land and property of the United States covered by and used in connection with this permit, and shall pay the United States for any damage resulting from negligence or from the violation of the terms of this permit or of any law or regulation applicable to the national forests by the permittee, or by any agents or employees of the permittee acting within the scope of their agency or employment.

9. The permittee shall fully repair all damage, other than ordinary wear and tear, to national forest roads and trails caused by the permittee in the exercise of the privilege granted by this permit.

10. No Member of or Delegate to Congress or Resident Commissioner shall be admitted to any share or part of this agreement or to any benefit that may arise herefrom unless it is made with a corporation for its general benefit.

11. Upon abandonment, termination, revocation, or cancellation of this permit, the permittee shall remove within a reasonable time all structures and improvements except those owned by the United States, and shall restore the site, unless otherwise agreed upon in writing or in this permit. If the permittee fails to remove all such structures or improvements within a reasonable period, they shall become the property of the United States, but that will not relieve the permittee of liability for the cost of their removal and restoration of the site.

12. This permit is not transferable. If the permittee through voluntary sale or transfer, or through enforcement of contract, foreclosure, tax sale, or other valid legal proceeding shall cease to be the owner of the physical improvements situated on the land described in this permit and is unable to furnish adequate proof of ability to redeem or otherwise reestablish title to said improvements, this permit shall be subject to cancellation. But if the person to whom title to said improvements shall have been transferred in either manner above provided is qualified as a permittee, and is willing that his future occupancy of the premises shall be subject to such new conditions and stipulations as existing or prospective circumstances may warrant, his continued occupancy of the premises may be authorized by permit to him if, in the opinion of the forest supervisor, issuance of a permit is desirable and in the public interest.

13. In case of change of address, the permittee shall immediately notify the forest supervisor.

14. The temporary use and occupancy of the premises and improvements herein described may not be sublet by the permittee to third parties without the prior written approval of the forest supervisor and the permittee shall continue to be responsible for compliance with all conditions of this permit by persons to whom such premises may be sublet.

15. This permit may be terminated upon breach of any of the conditions herein or at the discretion of the regional forester or the Chief, Forest Service.

16. In the event of any conflict between any of the preceding printed clauses or any provision thereof and any of the following clauses or any provision thereof, the preceding printed clauses will control.

17. This permit is subject to the conditions set forth above and to conditions 18 to _____ attached hereto and made a part of this permit.

Date 5/15/51

T. W. Russell
(Signature of issuing officer)

Forest Supervisor
(Title)

U. S. GOVERNMENT PRINTING OFFICE 16—38077-8

18. This permit confers no right upon the permittee to use the water involved.

19. This permit is limited in area to the areas actually used or needed in the construction, maintenance and operation of the reservoir.

20. The permittee will dispose of all brush, refuse, or unused timber accumulating upon the reservoir area at such times and in such manner as may be required by the Forest Officer in charge.

21. No structures or improvements, other than those authorized herein, shall be placed on the area covered by this permit.

22. The permittee shall construct all works strictly in accordance with the plans and specifications submitted by him and approved by the State Engineer and Chief of the Forest Service. A representative of the Forest Service may inspect the construction of the contemplated works at any time. Failure to maintain the dam or other water structures in a safe condition as determined by the Regional Forester is sufficient grounds for cancelling this permit.

23. The location of the road and of borrow pits will be approved by the Forest Supervisor or his representative before work begins. After completion of the project the road, spillway cuts, borrow pits and other land scars will be smoothed to conform with the general contour of the adjacent area, top soil replaced, then revegetated in accordance with instructions of the Forest Supervisor.

24. All government owned improvements, the relocation of which is necessitated by operations under this permit, shall be relocated by, and at the expense of the permittee. Such relocation shall be so made that service is not interrupted on location and in accordance with plans and specifications approved by the Regional Forester or his representative.

25. The permittee shall make adequate provision satisfactory to the Forest Supervisor or his representative for the disposal of the water which is to be delivered from one stream drainage to another, in such manner as to avoid flooding, channel erosion and injury to national forest lands and to roads or other property. It is the intent and meaning of this clause that, if the water cannot be otherwise disposed of without such injury the permittee shall install and maintain in good condition, a pipeline of sufficient capacity and proper intake to conduct the water downstream from the point of discharge to a point where the open water course can handle the flow without causing damage.

26. The permittee, in the exercise of this permit, shall not discriminate against any employee or applicant for employment because of race, creed, color or national origin and shall include in all subcontracts a provision imposing a like obligation on subcontractors.

The undersigned authorized officer of the Silver Lake Irrigation Company has read the foregoing permit and agrees for and in behalf of said company that it accepts and will abide by all the terms and conditions thereof.

SILVER LAKE IRRIGATION COMPANY

By James T. King
Secy. Silver Lake Irr. Dist.

Date 5/8/51

Form 866

UNITED STATES DEPARTMENT OF AGRICULTURE

FOREST SERVICE

SPECIAL USE APPLICATION

FOREST SERVICE
Bridger Cong.
KEMMERER WYO
AUG 2 1949
RECEIVED

RECEIVED
AUG - 4 1949
LANDS

U
USES - Bridger
Silver Lake ~~Reservoir Co.~~ Irrigation Co.
1-1-28
(Case Designation)

Application is hereby made for permit to use the following described lands:

Outlet of Silver Lake in approximately the SE¼, NW¼, Sec. 34, Twp. 33 N., Range 105 W. , 6th P.M.

for the purpose of Improving the dam and raising the water level of the reservoir
(State fully the nature of the intended use)

Construction of intended improvements will begin within 10 months and be completed within 24 months; the premises will be used at least 365 days each year; the contemplated improvements will cost approximately 10,000.00 dollars and will consist of the following: Reconstruction of the dam and providing a new spillway

Silver Lake ~~Reservoir~~ Irrigation Co.

Nov. 27, 1946
(Date of application)

By: James King Secy.-Treas.
(Signature of applicant)

Boulder, Wyoming
(Post office address)

16—15559

(See reverse side for general conditions under which permits are granted)

Permits are usually granted subject to the following general conditions and such special conditions as may be found desirable:

1. That there will be compliance with the regulations of the Department of Agriculture governing the National Forest and with all sanitary laws and regulations applicable to the premises.

2. That the premises will be kept in a neat and orderly condition and all refuse disposed of and outhouses and cesspools located as directed by the forest officers.

3. That all reasonable precautions will be observed to prevent and suppress forest fires.

4. That if engaged in business the permittee will conduct same in an orderly manner and in accordance with State as well as Federal laws.

5. That the permit is granted subject to valid claims.

6. That no timber will be cut or destroyed except under permit obtained from the forest officers.

7. That an annual rental charge will be paid.

8. That when requested by forest officers, a way across the land, covered by permit, will be provided for the free ingress or egress of forest officers and the users of National Forest and purchasers of National Forest products.

16—15559 U. S. GOVERNMENT PRINTING OFFICE

Case Designation:

U
USES - Bridger
Silver Lake Irrigation Company
Reservoir, ~~11/27/46~~, other than FR-
5/15/57

SPECIAL USE PERMIT

Bridger National Forest.

Permission is hereby granted to Silver Lake Irrigation Company

of Boulder, Wyoming,

hereinafter called the permittee, to use, subject to the conditions set out below, the following-described lands or improvements:

A portion of unsurveyed sections 27 and 34, T 33 N, R 105 W, also a portion of unsurveyed sections 5 and 8, T 32 N, R 105 W, and the old wagon road from Pocket Creek to Silver Lake.

This permit covers 200 acres and/or 8 miles for the purpose of:

Transporting supplies and material for reconstructing a surface water reservoir. The operation and maintenance of the reservoir will be accomplished by horse travel.

The exercise of any of the privileges granted in this permit constitutes acceptance of all the conditions of this permit.

1. In consideration for this use, the permittee shall deposit with the Regional Fiscal Agent, Forest Service, No charge, Reg. U - 11g - Irrigation, a check, draft, or money order made payable to the Treasurer of the United States in the sum of _____ dollars ($_____) for the period from _____, 19____, to _____, 19____, and thereafter annually on _____, _____ dollars ($_____). The charges for this use may be readjusted from time to time to place this permit on a basis consistent with the charge to other permittees for like privileges.

2. Construction or occupancy and use under this permit shall begin within 3 months, and construction, if any, shall be completed within 24 months, from the date of the permit. This use shall be actually exercised at least 365 days each year, unless otherwise authorized in writing.

3. Development plans; lay-out plans; construction, reconstruction, or alteration of improvements; or revision of lay-out or construction plans for this area must be approved in advance and in writing by the forest supervisor. Trees or shrubbery on the permitted area may be removed or destroyed only after the forest officer in charge has approved, and has marked or otherwise designated that which may be removed or destroyed. Merchantable timber cut must be paid for by the permittee. Trees, shrubs, and other plants may be planted in such manner and in such places about the premises as may be approved by the forest officer in charge.

4. The permittee shall maintain the improvements and premises to standards of repair, orderliness, neatness, sanitation, and safety acceptable to the forest officer in charge.

5. This permit is subject to all valid claims.

6. The permittee, in exercising the privileges granted by this permit, shall comply with the regulations of the Department of Agriculture and all Federal, State, county, and municipal laws, ordinances, or regulations which are applicable to the area or operations covered by this permit.

7. The permittee shall take all reasonable precautions to prevent and suppress forest fires. No material shall be disposed of by burning in open fires during the closed season established by law or regulation without a written permit from the forest officer in charge or his authorized agent.

8. The permittee shall exercise diligence in protecting from damage the land and property of the United States covered by and used in connection with this permit, and shall pay the United States for any damage resulting from negligence or from the violation of the terms of this permit or of any law or regulation applicable to the national forests by the permittee, or by any agents or employees of the permittee acting within the scope of their agency or employment.

9. The permittee shall fully repair all damage, other than ordinary wear and tear, to national forest roads and trails caused by the permittee in the exercise of the privilege granted by this permit.

10. No Member of or Delegate to Congress or Resident Commissioner shall be admitted to any share or part of this agreement or to any benefit that may arise herefrom unless it is made with a corporation for its general benefit.

11. Upon abandonment, termination, revocation, or cancellation of this permit, the permittee shall remove within a reasonable time all structures and improvements except those owned by the United States, and shall restore the site, unless otherwise agreed upon in writing or in this permit. If the permittee fails to remove all such structures or improvements within a reasonable period, they shall become the property of the United States, but that will not relieve the permittee of liability for the cost of their removal and restoration of the site.

12. This permit is not transferable. If the permittee through voluntary sale or transfer, or through enforcement of contract, foreclosure, tax sale, or other valid legal proceeding shall cease to be the owner of the physical improvements situated on the land described in this permit and is unable to furnish adequate proof of ability to redeem or otherwise reestablish title to said improvements, this permit shall be subject to cancellation. But if the person to whom title to said improvements shall have been transferred in either manner above provided is qualified as a permittee, and is willing that his future occupancy of the premises shall be subject to such new conditions and stipulations as existing or prospective circumstances may warrant, his continued occupancy of the premises may be authorized by permit to him if, in the opinion of the forest supervisor, issuance of a permit is desirable and in the public interest.

13. In case of change of address, the permittee shall immediately notify the forest supervisor.

14. The temporary use and occupancy of the premises and improvements herein described may not be sublet by the permittee to third parties without the prior written approval of the forest supervisor and the permittee shall continue to be responsible for compliance with all conditions of this permit by persons to whom such premises may be sublet.

15. This permit may be terminated upon breach of any of the conditions herein or at the discretion of the regional forester or the Chief, Forest Service.

16. In the event of any conflict between any of the preceding printed clauses or any provision thereof and any of the following clauses or any provision thereof, the preceding printed clauses will control.

17. This permit is subject to the conditions set forth above and to conditions 18 to _____ attached hereto and made a part of this permit.

Date _____

_____
(Signature of issuing officer)

_____
(Title)

U. S. GOVERNMENT PRINTING OFFICE 16—38077-3

18. This permit confers no right upon the permittee to use the water involved.

19. This permit is limited in area to the areas actually used or needed in the construction, maintenance and operation of the reservoir.

20. The permittee will dispose of all brush, refuse, or unused timber accumulating upon the reservoir area at such times and in such manner as may be required by the Forest Officer in charge.

21. No structures or improvements, other than those authorized herein, shall be placed on the area covered by this permit.

22. The permittee shall construct all works strictly in accordance with the plans and specifications submitted by him and approved by the State Engineer and Chief of the Forest Service. A representative of the Forest Service may inspect the construction of the contemplated works at any time. Failure to maintain the dam or other water structures in a safe condition as determined by the Regional Forester is sufficient grounds for cancelling this permit.

23. The location of the road and of borrow pits will be approved by the Forest Supervisor or his representative before work begins. After completion of the project the road, spillway cuts, borrow pits and other land scars will be smoothed to conform with the general contour of the adjacent area, top soil replaced, then revegetated in accordance with instructions of the Forest Supervisor.

24. All government owned improvements, the relocation of which is necessitated by operations under this permit, shall be relocated by, and at the expense of the permittee. Such relocation shall be so made that service is not interrupted on location and in accordance with plans and specifications approved by the Regional Forester or his representative.

25. The permittee shall make adequate provision satisfactory to the Forest Supervisor or his representative for the disposal of the water which is to be delivered from one stream drainage to another, in such manner as to avoid flooding, channel erosion and injury to national forest lands and to roads or other property. It is the intent and meaning of this clause that, if the water cannot be otherwise disposed of without such injury the permittee shall install and maintain in good condition, a pipeline of sufficient capacity and proper intake to conduct the water downstream from the point of discharge to a point where the open water course can handle the flow without causing damage.

26. The permittee, in the exercise of this permit, shall not discriminate against any employee or applicant for employment because of race, creed, color or national origin and shall include in all subcontracts a provision imposing a like obligation on subcontractors.

The undersigned authorized officer of the Silver Lake Irrigation Company has read the foregoing permit and agrees for and in behalf of said company that it accepts and will abide by all the terms and conditions thereof.

SILVER LAKE IRRIGATION COMPANY

By _____

Date _____

_____

UNITED STATES DEPARTMENT OF AGRICULTURE
FOREST SERVICE
Bridger National Forest
Kemmerer, Wyoming 83101

In Reply Refer To:

2720

January 9, 1969

Silver Lake Reservoir Company
James T. King
Boulder, Wyoming 82923

Dear Permittee:

The following is a new regulation on the transfer of special use permits:

> "In all cases where a transfer of improvements is made and it is necessary to issue a new permit to cover the use, a transfer fee of $25.00 or an amount equal to the annual fee, whichever is less, will be charged. The charge will be assessed to the new permittee and will be billed at the time the initial payment from him is due."

This regulation became effective in October, 1968. We felt you should know about it in case you should ever desire to transfer your permit to someone else.

Sincerely yours,

Wm O. Deshler

WM. O. DESHLER
Forest Supervisor

cc: D-5

USDA United States Department of Agriculture | Forest Service | Bridger-Teton National Forest | 340 N. Cache
PO Box 1888
Jackson, WY 83001-1888

File Code: 2720
Date: January 10, 2007

Dear Permittee:

On February 21, 2006, the Forest Service published in the Federal Register (71 FR 8892) final regulations that directs the Forest Service to recover costs associated with processing special use applications and monitoring compliance of these special use authorizations.

These regulations provide the Forest Service with the regulatory authority to implement a series of federal statutes that authorize the assessment and collection of fees to recover the agency's costs to conduct work, and/or provide services to identifiable recipients that are not otherwise provided for the benefit of the public as a whole. The processing and monitoring fees collected pursuant to these regulations will allow the Forest Service to provide more timely responses to the special use applicants and holders of the authorizations.

These regulations WILL NOT have an immediate effect upon you as a current holder of a special use authorization. In the future, they may affect you under one of the following situations:

1. If and when you apply for a new authorization to occupy and use National Forest System lands.
2. If you currently use and occupy National Forest System lands, and either do not hold a special use authorization to do so, or the authorization you do hold has or is about to expire.
3. If you propose to modify your existing authorized use.

Recreation based special use authorizations that require 50 hours or less to process may be exempt from cost recovery fees. Additional information can be found on the Forest Service's internet site at www.fs.fed.us/recreation/permits.

If you have additional questions, please contact Kristi VonKrosigk of my staff at (307)739-5597 or the permit administrator on the district your authorized use resides.

Sincerely,

Kniffy Hamilton

CAROLE 'KNIFFY' HAMILTON
Forest Supervisor

REPORT ON CONDITIONS OF SPECIAL USE AREA

Silver Lake Irrig. Dist.
Reservior - Other Than FPC
5/15/57 (11-27/46)
(Case designation)

Is permit used? YES Is continuance desired? YES Area cultivated? —

What is condition of area used? Good

Cost of improvements 15000.00 Condition of improvements Good

Are the permit conditions complied with? YES

What action is necessary to correct any unsatisfactory conditions?

NONE

What action has been taken by reporting officer?

11-12-64 (Date examined) 19 [illegible] (Name)

D.F.R. (Title)

2700-1
(6-59)

SEE BACK FOR INSTRUCTIONS

16—60515-2

Form FS-399
(Revised Nov. 1949)

REPORT ON CONDITIONS OF SPECIAL USE AREA

-USES
Silver Lake Res. Co -
3/11/40
(Case designation)

Is permit used? YES Is continuance desired? YES Area cultivated? NONE

What is condition of area used? Good

Cost of improvements [redacted] Condition of improvements Good

Are the permit conditions complied with? YES

What action is necessary to correct any unsatisfactory conditions?

NONE

What action has been taken by reporting officer?

Aug (Date examined) 1958 K. D. Roberts (Name)

D.F.R. (Title)

SEE BACK FOR INSTRUCTIONS

16—60515-1

REPORT ON CONDITIONS OF SPECIAL USE AREA

Silver LAKe Irrig Co.

Reservior - other than FPC
(Case designation)

5/15/51

Is permit used? yes Is continuance desired? yes Area cultivated?

What is condition of area used? Good

Cost of improvements 15,000.00 Condition of improvements Good

Are the permit conditions complied with?

What action is necessary to correct any unsatisfactory conditions?

None

No evidence of violation of Title VI under CRA-1964

What action has been taken by reporting officer?

Sept. 16, 19 66 Lynn N. Batt
(Date examined) (Name)

Range Con.
(Title)

2700-1
(6-59)

SEE BACK FOR INSTRUCTIONS

16—60515-2

REPORT ON CONDITIONS OF SPECIAL USE AREA

Silver LAKe [redacted] Ros. co.

Reservior (other than FPC)
(Case designation)

Is permit used? yes Is continuance desired? yes Area cultivated?

What is condition of area used?

Good

Cost of improvements — Condition of improvements

Good

Are the permit conditions complied with? yes

What action is necessary to correct any unsatisfactory conditions?

none

no evidence of violation of Title VI - CRA - 1964

What action has been taken by reporting officer?

none

Sept, 19 66 Lynn N. Batt
(Date examined) (Name)

Range Con.
(Title)

2700-1
(6-59)

SEE BACK FOR INSTRUCTIONS

16—60515-2

REPORT ON CONDITIONS OF SPECIAL USE AREA

Silver Lake Res Co
(Case designation)

Reservoir other than [illegible]

Is permit used? YES Is continuance desired? YES Area cultivated? _____

What is condition of area used? Good

Cost of improvements _____ Condition of improvements _____

Are the permit conditions complied with? YES

What action is necessary to correct any unsatisfactory conditions? None — See [redacted] Folder #2

No evidence of violation of Title VI CRA 1964

What action has been taken by reporting officer? None

October 22, 1968 (Date examined) [illegible] (Name)

[illegible] (Title)

2700-1 (6-59) SEE BACK FOR INSTRUCTIONS

16—60515-2

REPORT ON CONDITIONS OF SPECIAL USE AREA

Silver Lake Irrig Co. 5715/51
(Case designation)

Reservoir other than [illegible]

Is permit used? YES Is continuance desired? YES Area cultivated? _____

What is condition of area used? Good

Cost of improvements 15 [illegible] Condition of improvements Good

Are the permit conditions complied with? YES

What action is necessary to correct any unsatisfactory conditions? None

No evidence of violation of Title VI under CRA 1964

What action has been taken by reporting officer? _____

October 22 1968 (Date examined) [illegible] (Name)

[illegible] (Title)

2700-1 (6-59) SEE BACK FOR INSTRUCTIONS

16—60515-2

SPECIAL USE DESK CHECK

2710

Permittee: SILVER LAKE IRRIG. DISTRICT	R. O. Review By:
Use: RESERVOIR	Date:
Case Date: 11/27/46	Forest Review By: R. C. BURKHOLDER
Term: / Term Expires: / Limited Tenure Expires:	Date: 7/23/63

Item	Reference	Action Needed (No entry indicates satisfactory procedure.) Initial item when action is taken.
1. Special Use Permit Review		
a. Were application and report properly executed?	FSH 2717 Page 117	O.K.
b. Was status checked before permit was issued?		O.K.
c. Did permitting officer have authority to issue?	FSM 2710.2	W. W. DRESKELL, FOREST SUPERVISOR
d. Proper use designation	FSH 2719.71 Page 159	ADD "OTHER THAN FPC" AA.
e. Proper case designation (Permit issued subsequent to March 1, 1959)	FSH 2718.41 Page 148	O.K. — DATE OF APP.
f. Is permit issued under the proper act?	FSH 2714 Page 105	OK
g. Is use area properly described - legal subdivision (acres, miles, or both)? Is the location properly shown or reference made to a map?	FSH 2717 Page 117 FSH 2718.11 Page 140	OK
h. Is the use properly described?	FSH 2713 Pages 25-103	OK

R4-2700-1 (1/62)

Item	Reference	Action Needed
i. Free or charge? If free, is free use authorized under Regulation U-11 and the Chief's limitations?	FSM 2711	FREE — USE AUTHORIZED UNDER REG. U-11
j. Are amendments and contracts or third party agreements attached to permit?		NONE IN S.O. CASE FOLDER
k. Have development, architectural and engineering plans been approved prior to start of construction?	FSH 2314.4 2314.8 FSH 2713, Pages 78,43 and 83	YES
l. Special Clauses.		
(1) Development and improvement schedules	FSH 2718.12 FSH 2718.13	STANDARD CLAUSE
(2) Nondiscrimination (employment - all permits involving employment of labor) (service - commercial public service permits issued, revised or renewed after 4/18/58)		OK
(3) Safety - patrols, first aid, capacity oars, life preservers, etc, as applicable		
(4) Liability Insurance		
(5) Insurance (Government buildings)		

R4-2700-1 (1/62)

Item	Reference	Action Needed
(6) Bond or cooperative deposit		
(7) Reclamation or power site withdrawal		
(8) Termination		
(9) Hold harmless clause		
(10) Outstanding rights		
m. Fees		
(1) Have audits been made where required? (annual for percentage fees - year before adjustment for flat fees)	FSH 2717.63 Page 156	DOES NOT APPLY
(2) Is basis for fee correct? Is the Government getting its true share?	FSH 2712	
(3) Are fees periodically reappraised (clause included)	FSH 2712.23	
(4) Is correct fee used? (flat or percentage)	FSH 2712.22 Page 18	
(5) If on a percentage basis, is percentage correct?	FSH 2712	
(6) Are fees paid on schedule when due?		

Item	Reference	Action Needed
n. Rates Are rates charged for services and supplies in line with similar charges in comparable places? (clause included)	FSH 2718.12 FSH 2718.13	———
o. Is use in accord with present policy? If not, should use be placed on tenure?		APPARENTLY O.K.
p. If term permit, is acreage limitation O.K.? Is term O.K.?		———
2. Case Folders		
a. Order of filing - (permit stapled or attached to front of folder)	FSH 2719.81 Page 163	O.K.
b. Check correspondence to learn if required actions were completed. e.g. - letter asks permittee to pay for damages to Government property but file does not reveal whether payment was made. e.g. - case in open file with application of long standing - no permit issued.		O.K.
c. Have initial application, report, map and plans been brought forward from previous case?		O.K.

Item	Reference	Action Needed
3. Form FS 619	FSH 2719.82 Page 163	FREE —
a. Filing - paid, unpaid, free, charge (file by use designations, or alphabetical)		NUMMERETICAL
b. Proper entires		CHANGE DATES — MAR. 11/27/46 ISSUED 5/15/51
c. Cross reference designation when more than one use. e.g. residence and road		—
4. Promise Card		
a. For 5-year adjustments card called up at least one year previous to end of 5-year period.		
b. Notify permittee at least three months previous to end of 5-year period if there will be change in fee for next 5-year period.		
5. Inspections	FSH 2719.62 Page 155	NO - SHOULD BE EVERY YEAR
a. Is frequency requirement being met?		1961 KR.
b. Are reports in case folder?		YES — LAST DATED AUG. 1958, K.D. ROBERTS
c. Is there record of remedial actions?		NONE INDICATED AS NEEDED

FOREST SERVICE
Bridger National Forest
KEMMERER, WYO.
JAN 6 1965
RECEIVED

1. APPLICANT: Silver Lake Reservoir Company, E. P. Steele, President, Boulder, Wyoming. This association is composed of ranchers owning lands in the Eastfork Valley.

2. KIND OF PERMIT AND INTENDED USE: Silver Lake Reservoir on Silver Lake on the main Silver Creek Drainage, State Reservoir Permit No. 3970. Wolf Lake Reservoir on Wolf Lake on the South Fork of Silver Creek Drainage, State Permit No. 3971. A description of each Reservoir follows:-

Silver Lake Reservoir:- The reservoir is to be filled and appropriation is made for water from Silver Creek, a tributary of Eastfork River. The water is to be used for irrigation purposes on ranch lands in the Eastfork Valley. The outlet of the proposed reservoir is located N-09° 58' West,- 5.026 feet distant from the N¼ Corner of Section 3, T. 32 N., R., 105 West, 6th P. M., in unsurveyed territory, and approximately in Sections 26, 27, 34 and 35, T.32 North Range, 105 West, 6th P. M. The formation at the outlet consists of well cemented boulder, gravel and blue clay. The area of the low-water line is 113.78 acres, and the area of the high-water line is 157.52 acres, the area to be flooded is 43.74 acres. The available capacity of the reservoir is 1219.11 acre-feet. The dam is to be constructed of log cribs 10 feet square filled with rock, contents 360 Cubic Yards. The water face of the dam is to be protected from wave action in the following manner: 2" plank driven in ground and battoned with slabs. Engineer's estimated cost is $1435.00.

Wolf Lake Reservoir:- The reservoir is to be filled and appropriation is made for water from Wolf Creek and Whiskey Creek, tributaries of the South Fork of Silver Creek which is a tributary of Silver Creek. The water is to be used for irrigation purposes on ranch lands in the Eastfork Valley. The outlet of the proposed reservoir is located S--54° 47' West, 15,700 feet distant from the SW Corner of Section 35, T. 33 N. R., 105 West, 6th P. M., in unsurveyed territory, and approximately in the S½ of Section 6 and the N½ of Section 7, T., 32 North, Range 105 West, 6th P. M. The formation at the outlet consists of well cemented boulder gravel and clay. The area of the low-water line is 31.694 acres, and the area of the high-water line is 52.536 acres, the area to be flooded is 20.842 acres. The available capacity of the reservoir is 462.823 acre-feet. The dam is to be constructed of log cribs, 10 feet square, filled with rock, contents 351 cubic yards. The water face of the dam is to be protected from wave action by 2" plank driven into the ground and battoned with slabs. Engineer's estimated cost is $1040.00

3. LOCATION AND STATUS OF LAND AFFECTED:- The map accompanying this report shows the approximate location of the reservoirs and works. The exact location of the outlets is also given in the above paragrpahs. Located on Silver Creek and South Fork of Silver Creek Drainages. National Forest Land with no existing claims or improvements. It is possible to reach each lake wover the Pocket Creek Road and various trails traverse the area closely adjacent to the two proposed reservoirs.

4. CHARACTER OF LAND: The country in general is mountainous, but these ~~to~~ lakes lie above the main timbered rim in comparatively open country. There is considerable granite and rock buttes are prevalent throughout this section. The lakes are adaptable for the proposed use.

5. TIMBER: There will be no timber flooded or destroyed by the proposed reservoiring of these lakes. Timber for construction purposes will be procured from other Forest Lands adjacent to the works.

6. CONDITIONS IN PERMIT: Plans and specifications of the proposed structures have been approved by the State Engineer and should be constructed accordingly.

7. OTHER REMARKS: Additional water is badly needed for the irrigation of these ranch lands in the valley, and in fact this additional water is almost indespensible to the further farming and production of crops. So far as I have any knowledge, the granting of this permit will not effect the future use of these lands in any way.

8. DATE OF EXAMINATION: July 27 and August 25, 1927.

9. RECOMMENDATIONS: I recommend that the permits be granted allowing the applicants the right to store water for use on their ranch lands in the Eastfork Valley.